Bureau of Development Services
By E Sandy Date 11.1.12
Approved by Planning and Zoning Review

Permit Number

OCT 30 2012

Portland FOR CODE LIANCE

12-201003-MT

Albina Yard RTU Upgrade October 26, 2012

4703 N Albina, Portland, OR

TABLE OF CONTENTS

S1	Roof Framing Plan / RTU locations
S2	RTU Install Structural Notes
S3	RTU Hold Down Connection
R1	Reference RTU to be used
C1- C4	Support Calculations
BC1 – BC6	Beam Calculations

REGISTERED PROFESSIONAL ENGINEER 63107PE OREGON JULY 11, 2000 SCOTT BOWMAN

EXPIRES: 12-31-13

DESIGN CRITERIA

See RTU Install Structural Notes **S2** for load criteria & specifications.

Liability Limitations

Angle Design / Scott Bowman shall not be liable for the following:

- Existing building other than parts modified
- Site conditions or temporary support during construction.
- Quality of construction or site inspections.

ANGLE DESIGN

Scott Bowman P.E.
30421 NE Hurt Rd.
Troutdale, OR 97060
503-766-3213
angledesign@comcast.net

City of Portland
REVIEWED FOR CODE COMPLIANCE
OCT 30 2012
Permit Number

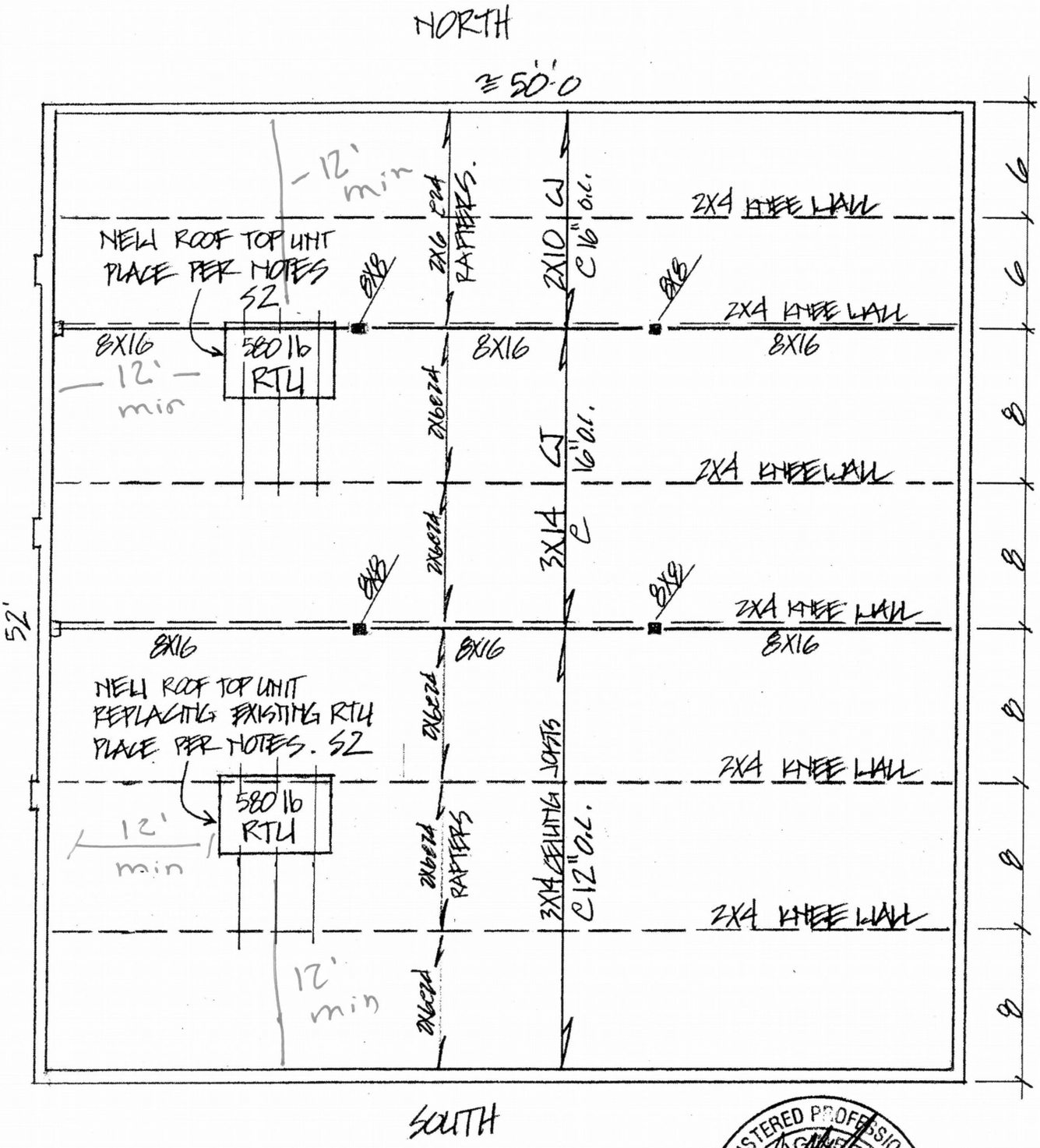

S1 ROOF FRAMING / RTU PLAN

SCALE 1/8" = 1'-0

REGISTERED PROFESSIONAL ENGINEER
PE
OREGON
JULY 11, 2000
SCOTT BOWMAN

EXPIRES: 12-31-13

52

Roof Top Unit Replacement & Addition Structural

REGISTERED PROFESSIONAL ENGINEER
PE
OREGON
JULY 11, 2000
SCOTT BOWMAN

EXPIRES: 12-31-13

Roof top units assumed to weigh 580lbs and curb to weigh 60lbs.
Roof top unit dimensions W=44", L=70", H=36" Curb H=14"

North Unit

Place long dimension perpendicular to rafters.
There shall be minimum 3 continuous 2x6 rafters under the unit.
The unit shall be placed such that the north long side shall be over the knee wall which is over the 8x16 beam below. The NE corner shall be maximum 2' away from 8x8 column.
The unit shall be placed such that no existing 2x6 rafters shall need to be cut. A 2x6 rafter shall run between the supply and return openings.
The 14" prefabricated curb shall be attached to the roof with minimum of 6-1/4"X3"Simpson Galvinized SDS screws. These shall go thru bottom flange of curb into the centerline of each existing 2x6 rafter along the long side. Connect the short side curb to 1x decking roof with #10X1" panhead screws at 12"o.c.
The mechanical unit shall be attached to the curb with minimum 4-6" 16gage hold down clips as shown in detail. These shall be on long side about 12" off corners.
It is acceptable to cut one 3x14 ceiling joist to get supply into space. Header the cut 3x14 off to neighboring 3x14's with a 3x14 or a 1.75X14LVL ripped to depth. Use Simpson face mount hangers. HU314 for 3x14 or HU14 for LVL at all end connections. Note continuous 3x14 transfer joists do not need to be reinforced. See calculations for support.

South Unit

The South unit is a replacement for an existing RTU assumed to be approximately the same weight as new unit. The new unit shall be placed back in the same location. Place long dimension perpendicular to rafters.
There shall be minimum 3 continuous 2x6 rafters under the unit.
The unit shall be placed such that the north long side shall be over the knee wall
The unit shall be placed such that no existing 2x6 rafters shall need to be cut. A 2x6 rafter shall run between the supply and return openings.
The 14" prefabricated curb shall be attached to the roof with minimum of 6-1/4"X3"Simpson Galvinized SDS screws. These shall go thru bottom flange of curb into the centerline of each existing 2x6 rafter along the long side. Connect the short side curb to 1x decking roof with #10X1" panhead screws at 12"o.c.
The mechanical unit shall be attached to the curb with minimum 4-6" 16gage hold down clips as shown in detail. These shall be on long side about 12" off corners.
It is acceptable to cut two 3x14 ceiling joist to get supply into space. Header the cut 3x14's off to neighboring continuous 3x14's with a 3x14 or a 1.75X14LVL ripped to depth. Use Simpson face mount hangers. HU314 for 3x14 or HU14 for LVL at all end connections. Note continuous 3x14 transfer joists do not need to be reinforced. See calculations for support.

SUBMITTAL **MicroMetl**

FORM NO. 3262-1P | DATE: 10 / 03

SUBMITTED TO _____
COMPANY: _____
DRAWN BY: M. HARGIS
JOB NAME: _____
EQUIPMENT: _____
NOTES: _____

Unit Hold-Down Brackets for Trane and American Standard YSC, YHC, TSC, THC, WSC, 036-120

Part Number:

MH-PRC-HOLD

FEATURES:

- Manufactured from 16 ga galvinized steel
- Package includes four (4) hold-down brackets thirtytwo (32) #10 x 1/2" tek screws eigh[illegible] ner bracket

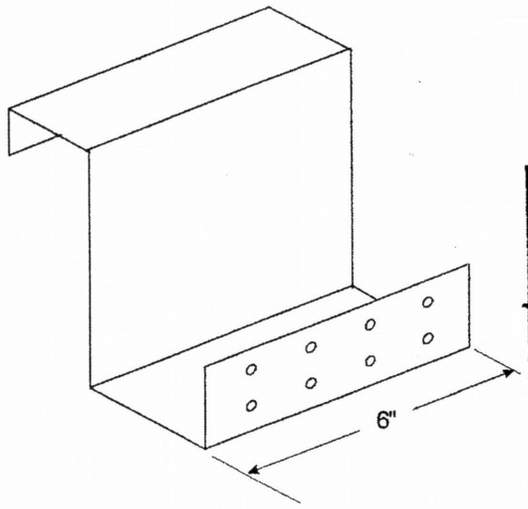

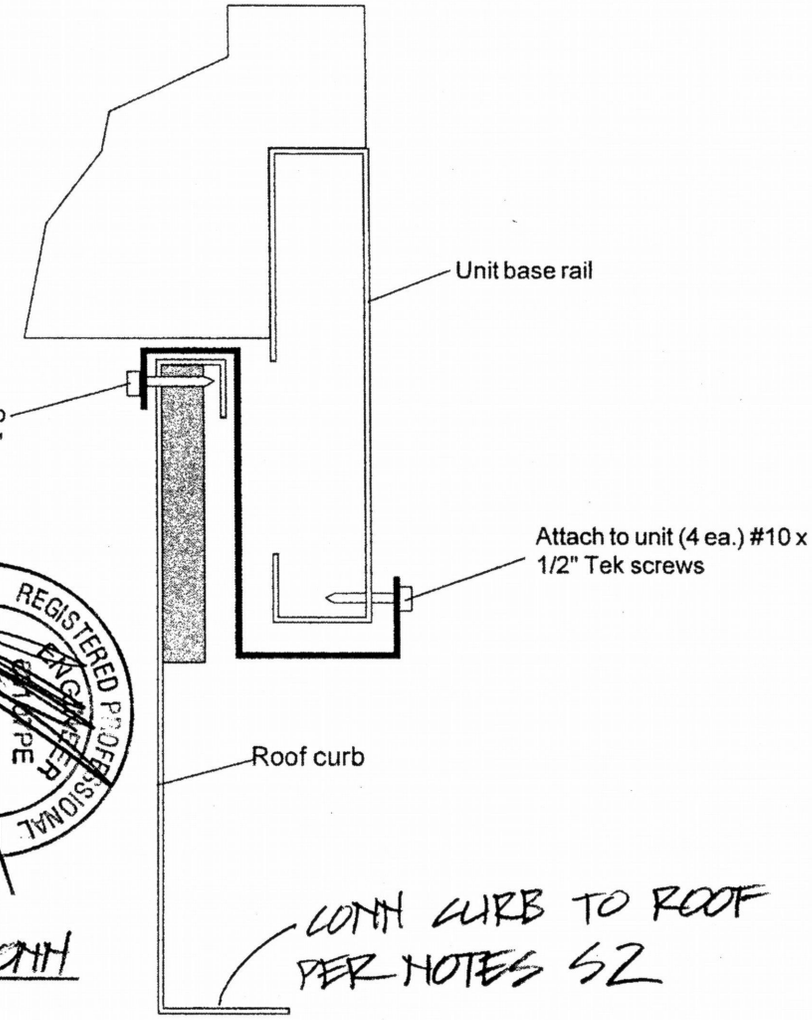

EXPIRES: 12-31-13

REGISTERED PROFESSIONAL ENGINEER
OREGON
JULY 11, 2000
SCOTT BOWMAN

S3 RTU HOLD DOWN CLIP CONN TO CURB N.T.S.

CONN CURB TO ROOF PER NOTES S2

THIS DOCUMENT IS THE PROPERTY OF MICRO METL CORPORATION AND IS DELIVERED UPON THE EXPRESS CONDITION THAT THE CONTENTS WILL NOT BE DISCLOSED OR USED WITHOUT MICRO METL'S WRITTEN CONSENT.

MICROMETL CORPORATION • 3035 N. SHADELAND AVENUE, SUITE 300 • INDIANAPOLIS, IN. 46226 • 1-800-662-4822 ••• MICROMETL WEST • 202 SOUTH 18TH ST. • SPARKS, NV 89431 • 1-800-884-4662

R1
REFERENCE

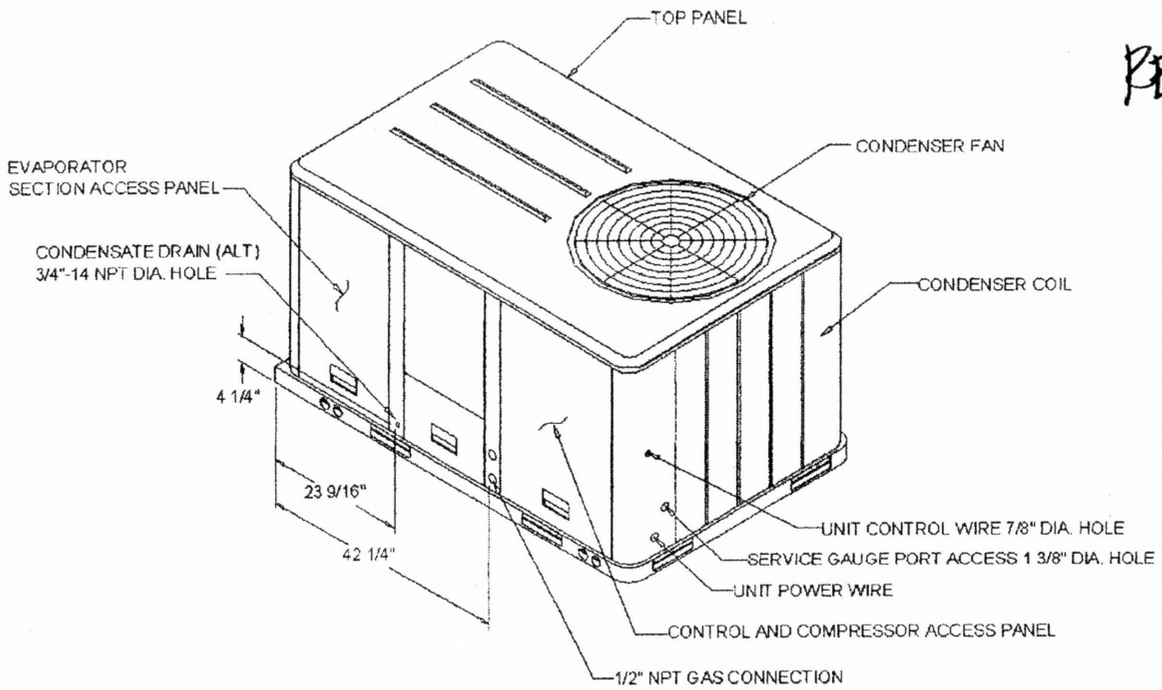

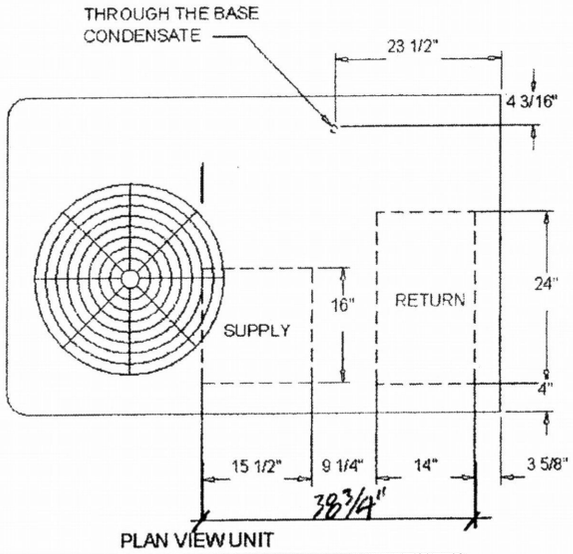

PLAN VIEW UNIT

DIMENSION DRAWING

NOTES:
1. THRU -THE -BASE GAS AND ELECTRICAL IS NOT STANDARD ON ALL UNITS.
2. VERIFY WEIGHT, CONNECTION, AND ALL DIMENSION WITH INSTALLER DOCUMENTS BEFORE INSTALLATION

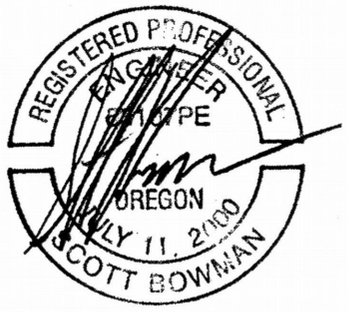

EXPIRES: 12-31-13

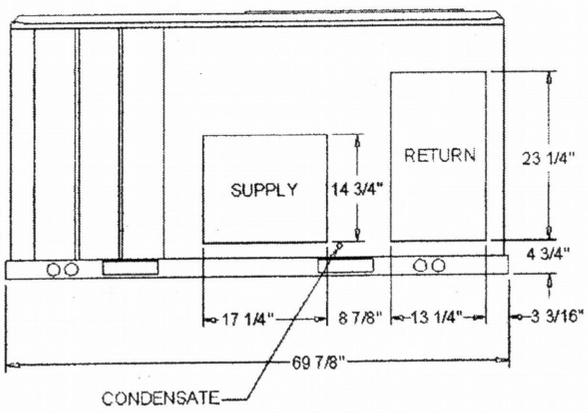

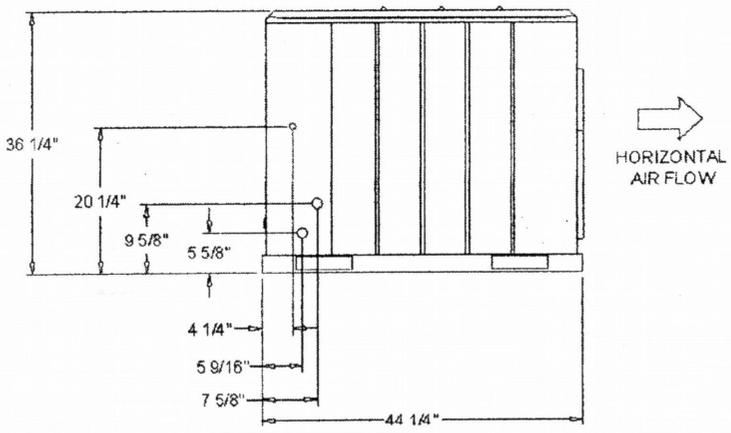

PACKAGED GAS / ELECTRICAL

DIMENSION DRAWING

C1
1-4

ALBINA YARD ROOF TOP UNIT REPLACE/MOVE.

UNIT WEIGHT = 580 lbs. CURB WEIGHT = 60 lbs.

UNIT DIM 48" X 76" X 35" CURB HEIGHT = 14"

ALT UNIT DIM 44" X 70"

SPACING OF CRIB WALL UNDER UNIT = 8'

LONG DIM PARALLEL TO BEAM ONE LONG CURBSIDE ON BEAM

WORST CASE CURB ON 3 JOISTS. USE 60% WEIGHT ONE SIDE.

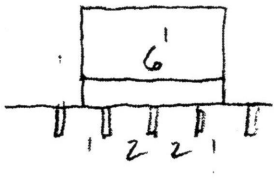

DL POINT LOAD = (.6)(580) + 30 / 3 JOIST
= 126 lbs.

SL POINT LOAD = 300 lb / 3 = 100 lbs

JOIST LOADING

EXIST JOIST
2X6 @ 24 SEL STR

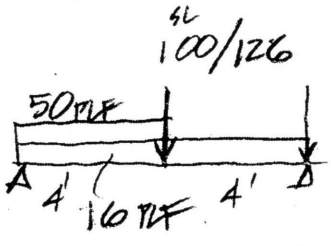

EXIST
2X6
OK A

REGISTERED PROFESSIONAL ENGINEER
OREGON
JULY 11, 2000
SCOTT BOWMAN
EXPIRES: 12-31-13

EXISTING CEILING JOISTS. @ HELL RTU

4' TRIB

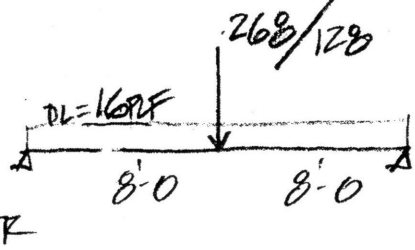

E = 3X14 @ 16 SEL STR

EXISTING
3X14 @ 16
OK AS IS

TRANSFER JOIST IF
1 CJ IS CUT

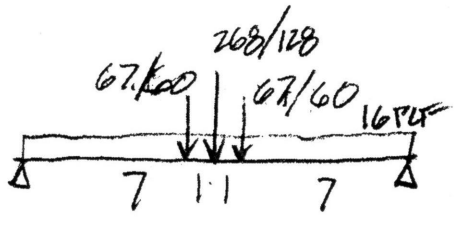

EXISTING
3X14 OK
AS IS

C2

JOIST LOADING @ EXISTING RTH SOUTH LIMIT

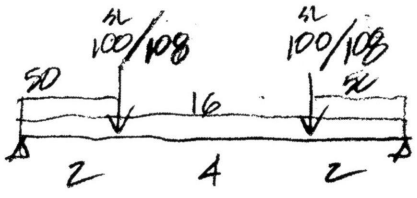

EXISTING
2X6 @24
OK AS IS.

CEILING JOIST @ (E) RTH

3X14 @12

STANDARD NO CUT

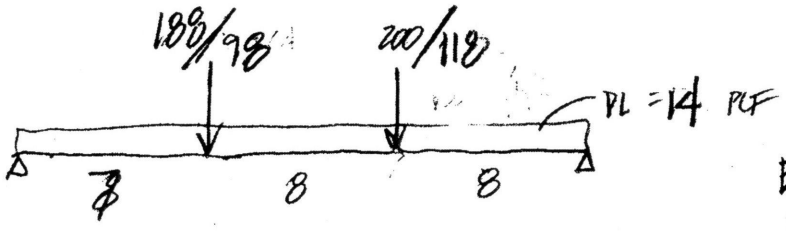

EXISTING
3X14 @12
OK AS IS.

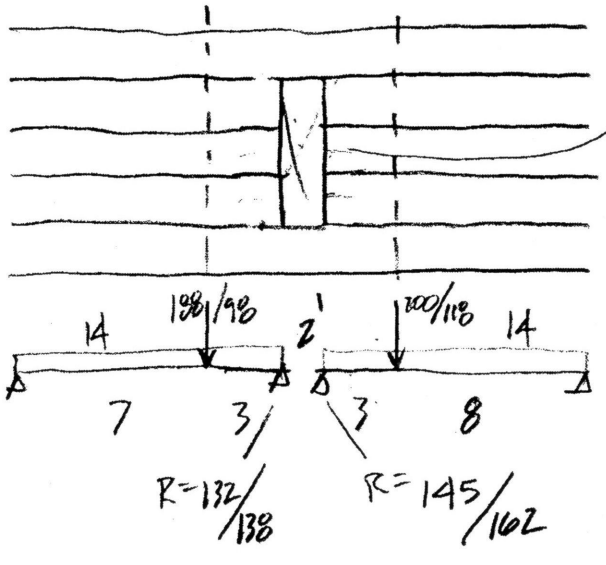

REGISTERED PROFESSIONAL ENGINEER
SCOTT BOWMAN
OREGON
JULY 11, 2000

EXPIRES: 12-31-13

TRANSFER JOISTS

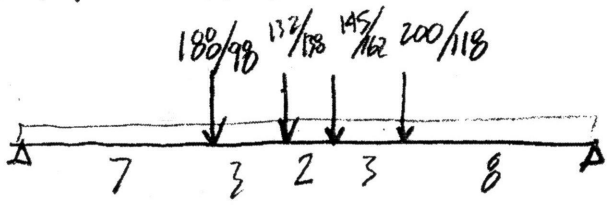

EXISTING
CONT 3X14
OK AS IS
NO REINF
REQ

C3

WEST NORTH UNIT LOAD/SF

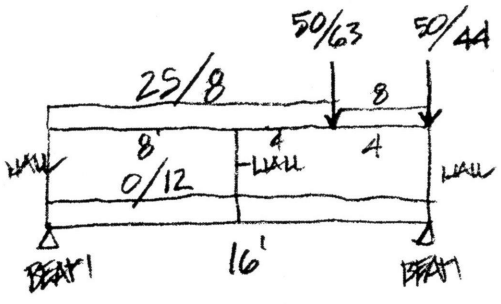

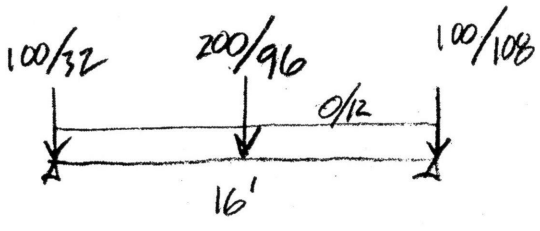

EAST SOUTH UNIT LOAD/SF

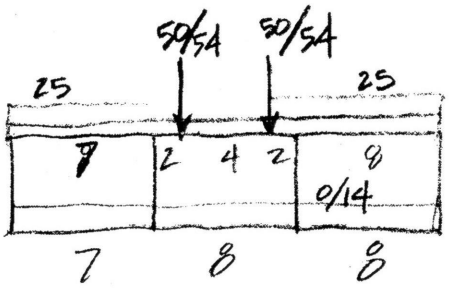

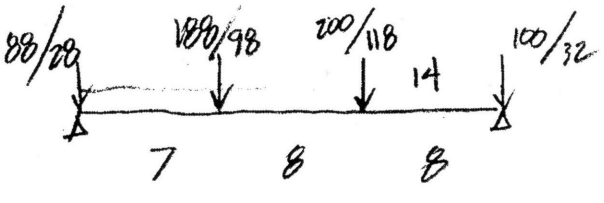

REGISTERED PROFESSIONAL ENGINEER
PE
OREGON
JULY 11, 2000
SCOTT BOWMAN

EXPIRES: 12-31-13

C4

RTU WIND/SEISMIC

95 MPH EXP B SEISMIC ZONE D $S_{DS} = .75$

$$F_p = \frac{.4 A_p S_{DS} W_p}{R_p / I_p}\left(1 + 2\frac{z}{h}\right) \qquad W_p = 640$$

$A_p = 1$ $R_p = 2.5$ $I_p = 1.0$ $z = 19'$ $h = 19'$

$$F_p = \frac{.4(1)(.75)}{2.5}\left(1 + 2\frac{19}{19}\right) W_p = .36 W_p$$

REGISTERED PROFESSIONAL ENGINEER STATE OF OREGON JULY 11, 2000 SCOTT BOWMAN

EXPIRES: 12-31-13

$\therefore F_p = .36(640) = 230$ lbs.

$M_{OT} = 230(14 + 36/2) = 7360$ "lbs.
$M_r = 640(48/2).6 = 9216$ "lbs. $>$ ∴ NO HOLD DOWN FORCES. JUST SHEAR

WIND COMP.

$h/b = 19/4 = 4.75$ $C_f = 1.4$ $A_f = 4'2'' \times 6' = 25 ft^2$

$q_z = 13.7$ $G = .85$

$F = 13.7 \times .85 \times 1.4 \times 25 ft^2 = 407$
$M_{OT} = 407(14 + 36/2) = 13042$ "lbs
$M_r = 9216$ "lbs $PHD = 13042 - 9216 / 48'' = 80$ lbs.

BY INSPECTION 2- HOLD DOWN CLIPS OK FOR 80 lbs UPLIFT

& 4 BRACKETS OK FOR 407 lbs SHEAR.

CURB CONN TO ROOF IF #14 X 3" SCREWS MIN 3 ON LONG SIDE INTO 2X6 RAFTER

PENETRATION = 1½"
PULLOUT CAP = 225 X 1.5 X 1.6 = 540 lbs X 3 = 1620 > 80 lbs ∴ OK
BASE SHEAR CAP = 110 X 1.6 X 6 SCREWS = 1056 > 230 & 407 ∴ OK

Multi-Loaded Beam[2006 International Building Code (05 NDS)] Ver: 7.01.08
By: Scott Bowman , Angle Design on: 10-26-2012 : 11:45:24 AM

Project: ALBINAYARD - Location: new RTU roof joists

Summary:

1.5 IN x 5.5 IN x 8.0 FT / Select Structural - Douglas-Fir-Larch - Dry Use
Section Adequate By: 94.8% Controlling Factor: Moment of Inertia / Depth Required 4.4 In

Center Span Deflections:			
Dead Load:	DLD-Center=	0.10	IN
Live Load:	LLD-Center=	0.11	IN = L/913
Total Load:	TLD-Center=	0.21	IN = L/468
Center Span Left End Reactions (Support A):			
Live Load:	LL-Rxn-A=	200	LB
Dead Load:	DL-Rxn-A=	134	LB
Total Load:	TL-Rxn-A=	334	LB
Bearing Length Required (Beam only, support capacity not checked):	BL-A=	0.36	IN
Center Span Right End Reactions (Support B):			
Live Load:	LL-Rxn-B=	100	LB
Dead Load:	DL-Rxn-B=	134	LB
Total Load:	TL-Rxn-B=	234	LB
Bearing Length Required (Beam only, support capacity not checked):	BL-B=	0.25	IN
Beam Data:			
Center Span Length:	L2=	8.0	FT
Center Span Unbraced Length-Top of Beam:	Lu2-Top=	0.0	FT
Center Span Unbraced Length-Bottom of Beam:	Lu2-Bottom=	8.0	FT
Live Load Duration Factor:	Cd=	1.15	
Live Load Deflect. Criteria:	L/	360	
Total Load Deflect. Criteria:	L/	240	
Center Span Loading:			
Uniform Load:			
Live Load:	wL-2=	0	PLF
Dead Load:	wD-2=	16	PLF
Beam Self Weight:	BSW=	2	PLF
Total Load:	wT-2=	18	PLF
Point Load 1			
Live Load:	PL1-2=	100	LB
Dead Load:	PD1-2=	126	LB
Location (From left end of span):	X1-2=	4.0	FT
Trapezoidal Load 1			
Left Live Load:	TRL-Left-1-2=	50	PLF
Left Dead Load:	TRD-Left-1-2=	0	PLF
Right Live Load:	TRL-Right-1-2=	50	PLF
Right Dead Load:	TRD-Right-1-2=	0	PLF
Load Start:	A-1-2=	0.0	FT
Load End:	B-1-2=	4.0	FT
Load Length:	C-1-2=	4.0	FT
Properties For: Select Structural- Douglas-Fir-Larch			
Bending Stress:	Fb=	1500	PSI
Shear Stress:	Fv=	180	PSI
Modulus of Elasticity:	E=	1900000	PSI
Adjusted Modulus of Elasticity:	E-Min=	690000	PSI
Stress Perpendicular to Grain:	Fc_perp=	625	PSI
Adjusted Properties			
Fb' (Tension):	Fb'=	2579	PSI
Adjustment Factors: Cd=1.15 CF=1.30 Cr=1.15			
Fv':	Fv'=	207	PSI
Adjustment Factors: Cd=1.15			
Design Requirements:			
Controlling Moment:	M=	794	FT-LB
4.0 Ft from left support of span 2 (Center Span)			
Critical moment created by combining all dead loads and live loads on span(s) 2			
Controlling Shear:	V=	307	LB
At a distance d from left support of span 2 (Center Span)			
Critical shear created by combining all dead loads and live loads on span(s) 2			
Comparisons With Required Sections:			
Section Modulus (Moment):	Sreq=	3.70	IN3
	S=	7.56	IN3
Area (Shear):	Areq=	2.22	IN2
	A=	8.25	IN2
Moment of Inertia (Deflection):	Ireq=	10.67	IN4
	I=	20.80	IN4

REGISTERED PROFESSIONAL ENGINEER
PE
OREGON
JULY 11, 2000
SCOTT BOWMAN

EXPIRES: 12-31-13

Multi-Loaded Beam[2006 International Building Code (05 NDS)] Ver: 7.01.08
By: Scott Bowman , Angle Design on: 10-26-2012 : 11:46:05 AM

Project: ALBINAYARD - Location: existing CJ at new RTU

Summary:

2.5 IN x 13.5 IN x 16.0 FT / Select Structural - Douglas-Fir-Larch - Dry Use

Section Adequate By: 266.6% Controlling Factor: Section Modulus / Depth Required 7.05 In

Center Span Deflections:			
Dead Load:	DLD-Center=	0.05	IN
Live Load:	LLD-Center=	0.04	IN = L/4732
Total Load:	TLD-Center=	0.10	IN = L/2016
Center Span Left End Reactions (Support A):			
Live Load:	LL-Rxn-A=	134	LB
Dead Load:	DL-Rxn-A=	251	LB
Total Load:	TL-Rxn-A=	385	LB
Bearing Length Required (Beam only, support capacity not checked):	BL-A=	0.25	IN
Center Span Right End Reactions (Support B):			
Live Load:	LL-Rxn-B=	134	LB
Dead Load:	DL-Rxn-B=	251	LB
Total Load:	TL-Rxn-B=	385	LB
Bearing Length Required (Beam only, support capacity not checked):	BL-B=	0.25	IN
Beam Data:			
Center Span Length:	L2=	16.0	FT
Center Span Unbraced Length-Top of Beam:	Lu2-Top=	0.0	FT
Center Span Unbraced Length-Bottom of Beam:	Lu2-Bottom=	16.0	FT
Live Load Duration Factor:	Cd=	1.00	
Live Load Deflect. Criteria:	L/	360	
Total Load Deflect. Criteria:	L/	240	
Center Span Loading:			
Uniform Load:			
Live Load:	wL-2=	0	PLF
Dead Load:	wD-2=	16	PLF
Beam Self Weight:	BSW=	7	PLF
Total Load:	wT-2=	23	PLF
Point Load 1			
Live Load:	PL1-2=	268	LB
Dead Load:	PD1-2=	128	LB
Location (From left end of span):	X1-2=	8.0	FT
Properties For: Select Structural- Douglas-Fir-Larch			
Bending Stress:	Fb=	1500	PSI
Shear Stress:	Fv=	180	PSI
Modulus of Elasticity:	E=	1900000	PSI
Adjusted Modulus of Elasticity:	E-Min=	690000	PSI
Stress Perpendicular to Grain:	Fc_perp=	625	PSI
Adjusted Properties			
Fb' (Tension):	Fb'=	1350	PSI
Adjustment Factors: Cd=1.00 CF=0.90			
Fv':	Fv'=	180	PSI
Adjustment Factors: Cd=1.00			
Design Requirements:			
Controlling Moment:	M=	2330	FT-LB
8.0 Ft from left support of span 2 (Center Span)			
Critical moment created by combining all dead loads and live loads on span(s) 2			
Controlling Shear:	V=	358	LB
At a distance d from right support of span 2 (Center Span)			
Critical shear created by combining all dead loads and live loads on span(s) 2			
Comparisons With Required Sections:			
Section Modulus (Moment):	Sreq=	20.71	IN3
	S=	75.94	IN3
Area (Shear):	Areq=	2.99	IN2
	A=	33.75	IN2
Moment of Inertia (Deflection):	Ireq=	61.03	IN4
	I=	512.58	IN4

REGISTERED PROFESSIONAL ENGINEER
PE
OREGON
JULY 11, 2000
SCOTT BOWMAN

EXPIRES: 12-31-13

Multi-Loaded Beam[2006 International Building Code (05 NDS)] Ver: 7.01.08
By: Scott Bowman , Angle Design on: 10-26-2012 : 11:46:27 AM

Project: ALBINAYARD - Location: transfer CJ at new RTU

Summary:

2.5 IN x 13.5 IN x 16.0 FT / Select Structural - Douglas-Fir-Larch - Dry Use
Section Adequate By: 165.4% Controlling Factor: Section Modulus / Depth Required 8.29 In

Center Span Deflections:			
Dead Load:	DLD-Center=	0.07	IN
Live Load:	LLD-Center=	0.06	IN = L/3179
Total Load:	TLD-Center=	0.13	IN = L/1445
Center Span Left End Reactions (Support A):			
Live Load:	LL-Rxn-A=	201	LB
Dead Load:	DL-Rxn-A=	311	LB
Total Load:	TL-Rxn-A=	512	LB
Bearing Length Required (Beam only, support capacity not checked):	BL-A=	0.33	IN
Center Span Right End Reactions (Support B):			
Live Load:	LL-Rxn-B=	201	LB
Dead Load:	DL-Rxn-B=	311	LB
Total Load:	TL-Rxn-B=	512	LB
Bearing Length Required (Beam only, support capacity not checked):	BL-B=	0.33	IN
Beam Data:			
Center Span Length:	L2=	16.0	FT
Center Span Unbraced Length-Top of Beam:	Lu2-Top=	0.0	FT
Center Span Unbraced Length-Bottom of Beam:	Lu2-Bottom=	16.0	FT
Live Load Duration Factor:	Cd=	1.00	
Live Load Deflect. Criteria:	L/	360	
Total Load Deflect. Criteria:	L/	240	
Center Span Loading:			
Uniform Load:			
Live Load:	wL-2=	0	PLF
Dead Load:	wD-2=	16	PLF
Beam Self Weight:	BSW=	7	PLF
Total Load:	wT-2=	23	PLF
Point Load 1			
Live Load:	PL1-2=	268	LB
Dead Load:	PD1-2=	128	LB
Location (From left end of span):	X1-2=	8.0	FT
Point Load 2			
Live Load:	PL2-2=	67	LB
Dead Load:	PD2-2=	60	LB
Location (From left end of span):	X2-2=	7.0	FT
Point Load 3			
Live Load:	PL3-2=	67	LB
Dead Load:	PD3-2=	60	LB
Location (From left end of span):	X3-2=	9.0	FT
Properties For: Select Structural- Douglas-Fir-Larch			
Bending Stress:	Fb=	1500	PSI
Shear Stress:	Fv=	180	PSI
Modulus of Elasticity:	E=	1900000	PSI
Adjusted Modulus of Elasticity:	E-Min=	690000	PSI
Stress Perpendicular to Grain:	Fc_perp=	625	PSI
Adjusted Properties			
Fb' (Tension):	Fb'=	1350	PSI
Adjustment Factors: Cd=1.00 CF=0.90			
Fv':	Fv'=	180	PSI
Adjustment Factors: Cd=1.00			
Design Requirements:			
Controlling Moment:	M=	3219	FT-LB
8.0 Ft from left support of span 2 (Center Span)			
Critical moment created by combining all dead loads and live loads on span(s) 2			
Controlling Shear:	V=	485	LB
At a distance d from right support of span 2 (Center Span)			
Critical shear created by combining all dead loads and live loads on span(s) 2			
Comparisons With Required Sections:			
Section Modulus (Moment):	Sreq=	28.61	IN3
	S=	75.94	IN3
Area (Shear):	Areq=	4.05	IN2
	A=	33.75	IN2
Moment of Inertia (Deflection):	Ireq=	85.11	IN4
	I=	512.58	IN4

REGISTERED PROFESSIONAL ENGINEER
SCOTT BOWMAN
OREGON
JULY 11, 2000
SCOTT BOWMAN

EXPIRES: 12-31-13

Multi-Loaded Beam[2006 International Building Code (05 NDS)] Ver: 7.01.08
By: Scott Bowman , Angle Design on: 10-26-2012 : 11:46:46 AM

Project: ALBINAYARD - Location: existing RTU roof joists

Summary:

1.5 IN x 5.5 IN x 8.0 FT / Select Structural - Douglas-Fir-Larch - Dry Use

Section Adequate By: 92.5% Controlling Factor: Moment of Inertia / Depth Required 4.42 In

Center Span Deflections:			
Dead Load:	DLD-Center=	0.11	IN
Live Load:	LLD-Center=	0.10	IN = L/983
Total Load:	TLD-Center=	0.21	IN = L/462
Center Span Left End Reactions (Support A):			
Live Load:	LL-Rxn-A=	200	LB
Dead Load:	DL-Rxn-A=	178	LB
Total Load:	TL-Rxn-A=	378	LB
Bearing Length Required (Beam only, support capacity not checked):	BL-A=	0.40	IN
Center Span Right End Reactions (Support B):			
Live Load:	LL-Rxn-B=	200	LB
Dead Load:	DL-Rxn-B=	178	LB
Total Load:	TL-Rxn-B=	378	LB
Bearing Length Required (Beam only, support capacity not checked):	BL-B=	0.40	IN
Beam Data:			
Center Span Length:	L2=	8.0	FT
Center Span Unbraced Length-Top of Beam:	Lu2-Top=	0.0	FT
Center Span Unbraced Length-Bottom of Beam:	Lu2-Bottom=	8.0	FT
Live Load Duration Factor:	Cd=	1.15	
Live Load Deflect. Criteria:	L/	360	
Total Load Deflect. Criteria:	L/	240	
Center Span Loading:			
Uniform Load:			
Live Load:	wL-2=	0	PLF
Dead Load:	wD-2=	16	PLF
Beam Self Weight:	BSW=	2	PLF
Total Load:	wT-2=	18	PLF
Point Load 1			
Live Load:	PL1-2=	100	LB
Dead Load:	PD1-2=	107	LB
Location (From left end of span):	X1-2=	2.0	FT
Point Load 2			
Live Load:	PL2-2=	100	LB
Dead Load:	PD2-2=	107	LB
Location (From left end of span):	X2-2=	6.0	FT
Trapezoidal Load 1			
Left Live Load:	TRL-Left-1-2=	50	PLF
Left Dead Load:	TRD-Left-1-2=	0	PLF
Right Live Load:	TRL-Right-1-2=	50	PLF
Right Dead Load:	TRD-Right-1-2=	0	PLF
Load Start:	A-1-2=	0.0	FT
Load End:	B-1-2=	2.0	FT
Load Length:	C-1-2=	2.0	FT
Trapezoidal Load 2			
Left Live Load:	TRL-Left-2-2=	50	PLF
Left Dead Load:	TRD-Left-2-2=	0	PLF
Right Live Load:	TRL-Right-2-2=	50	PLF
Right Dead Load:	TRD-Right-2-2=	0	PLF
Load Start:	A-2-2=	6.0	FT
Load End:	B-2-2=	8.0	FT
Load Length:	C-2-2=	2.0	FT
Properties For: Select Structural- Douglas-Fir-Larch			
Bending Stress:	Fb=	1500	PSI
Shear Stress:	Fv=	180	PSI
Modulus of Elasticity:	E=	1900000	PSI
Adjusted Modulus of Elasticity:	E-Min=	690000	PSI
Stress Perpendicular to Grain:	Fc_perp=	625	PSI
Adjusted Properties			
Fb' (Tension):	Fb'=	2579	PSI
Adjustment Factors: Cd=1.15 CF=1.30 Cr=1.15			
Fv':	Fv'=	207	PSI
Adjustment Factors: Cd=1.15			
Design Requirements:			
Controlling Moment:	M=	656	FT-LB
4.0 Ft from left support of span 2 (Center Span)			
Critical moment created by combining all dead loads and live loads on span(s) 2			
Controlling Shear:	V=	351	LB
At a distance d from left support of span 2 (Center Span)			
Critical shear created by combining all dead loads and live loads on span(s) 2			
Comparisons With Required Sections:			
Section Modulus (Moment):	Sreq=	3.05	IN3
	S=	7.56	IN3
Area (Shear):	Areq=	2.54	IN2
	A=	8.25	IN2
Moment of Inertia (Deflection):	Ireq=	10.80	IN4

REGISTERED PROFESSIONAL ENGINEER
PE
OREGON
JULY 11, 2000
SCOTT BOWMAN

EXPIRES: 12-31-13

Multi-Loaded Beam[2006 International Building Code (05 NDS)] Ver: 7.01.08
By: Scott Bowman , Angle Design on: 10-26-2012 : 11:46:57 AM

Project: ALBINAYARD - Location: ceiling joists under existing unit

Summary:

2.5 IN x 13.5 IN x 23.0 FT / Select Structural - Douglas-Fir-Larch - Dry Use

Section Adequate By: 131.2% Controlling Factor: Section Modulus / Depth Required 9.22 In

Center Span Deflections:			
Dead Load:	DLD-Center=	0.22	IN
Live Load:	LLD-Center=	0.15	IN = L/1886
Total Load:	TLD-Center=	0.37	IN = L/754
Center Span Left End Reactions (Support A):			
Live Load:	LL-Rxn-A=	200	LB
Dead Load:	DL-Rxn-A=	354	LB
Total Load:	TL-Rxn-A=	555	LB
Bearing Length Required (Beam only, support capacity not checked):	BL-A=	0.36	IN
Center Span Right End Reactions (Support B):			
Live Load:	LL-Rxn-B=	188	LB
Dead Load:	DL-Rxn-B=	352	LB
Total Load:	TL-Rxn-B=	540	LB
Bearing Length Required (Beam only, support capacity not checked):	BL-B=	0.35	IN
Beam Data:			
Center Span Length:	L2=	23.0	FT
Center Span Unbraced Length-Top of Beam:	Lu2-Top=	0.0	FT
Center Span Unbraced Length-Bottom of Beam:	Lu2-Bottom=	23.0	FT
Live Load Duration Factor:	Cd=	1.00	
Live Load Deflect. Criteria:	L/	360	
Total Load Deflect. Criteria:	L/	240	
Center Span Loading:			
Uniform Load:			
Live Load:	wL-2=	0	PLF
Dead Load:	wD-2=	14	PLF
Beam Self Weight:	BSW=	7	PLF
Total Load:	wT-2=	21	PLF
Point Load 1			
Live Load:	PL1-2=	188	LB
Dead Load:	PD1-2=	98	LB
Location (From left end of span):	X1-2=	7.0	FT
Point Load 2			
Live Load:	PL2-2=	200	LB
Dead Load:	PD2-2=	118	LB
Location (From left end of span):	X2-2=	15.0	FT
Properties For: Select Structural- Douglas-Fir-Larch			
Bending Stress:	Fb=	1500	PSI
Shear Stress:	Fv=	180	PSI
Modulus of Elasticity:	E=	1900000	PSI
Adjusted Modulus of Elasticity:	E-Min=	690000	PSI
Stress Perpendicular to Grain:	Fc_perp=	625	PSI
Adjusted Properties			
Fb' (Tension):	Fb'=	1350	PSI
Adjustment Factors: Cd=1.00 CF=0.90			
Fv':	Fv'=	180	PSI
Adjustment Factors: Cd=1.00			
Design Requirements:			
Controlling Moment:	M=	3696	FT-LB
12.65 Ft from left support of span 2 (Center Span)			
Critical moment created by combining all dead loads and live loads on span(s) 2			
Controlling Shear:	V=	535	LB
At a distance d from left support of span 2 (Center Span)			
Critical shear created by combining all dead loads and live loads on span(s) 2			
Comparisons With Required Sections:			
Section Modulus (Moment):	Sreq=	32.85	IN3
	S=	75.94	IN3
Area (Shear):	Areq=	4.46	IN2
	A=	33.75	IN2
Moment of Inertia (Deflection):	Ireq=	163.07	IN4
	I=	512.58	IN4

REGISTERED PROFESSIONAL ENGINEER
SCOTT BOWMAN
OREGON
JULY 11, 2000

EXPIRES: 12-31-13

Multi-Loaded Beam[2006 International Building Code (05 NDS)] Ver: 7.01.08
By: Scott Bowman , Angle Design on: 10-26-2012 : 11:47:01 AM

Project: ALBINAYARD - Location: ceiling joists transfer at existing unit

Summary:

2.5 IN x 13.5 IN x 23.0 FT / Select Structural - Douglas-Fir-Larch - Dry Use

Section Adequate By: 45.7% Controlling Factor: Section Modulus / Depth Required 11.18 In

Center Span Deflections:			
Dead Load:	DLD-Center=	0.35	IN
Live Load:	LLD-Center=	0.27	IN = L/1025
Total Load:	TLD-Center=	0.62	IN = L/444
Center Span Left End Reactions (Support A):			
Live Load:	LL-Rxn-A=	344	LB
Dead Load:	DL-Rxn-A=	510	LB
Total Load:	TL-Rxn-A=	854	LB
Bearing Length Required (Beam only, support capacity not checked):	BL-A=	0.55	IN
Center Span Right End Reactions (Support B):			
Live Load:	LL-Rxn-B=	321	LB
Dead Load:	DL-Rxn-B=	496	LB
Total Load:	TL-Rxn-B=	817	LB
Bearing Length Required (Beam only, support capacity not checked):	BL-B=	0.52	IN
Beam Data:			
Center Span Length:	L2=	23.0	FT
Center Span Unbraced Length-Top of Beam:	Lu2-Top=	0.0	FT
Center Span Unbraced Length-Bottom of Beam:	Lu2-Bottom=	23.0	FT
Live Load Duration Factor:	Cd=	1.15	
Live Load Deflect. Criteria:	L/	360	
Total Load Deflect. Criteria:	L/	240	
Center Span Loading:			
Uniform Load:			
Live Load:	wL-2=	0	PLF
Dead Load:	wD-2=	14	PLF
Beam Self Weight:	BSW=	7	PLF
Total Load:	wT-2=	21	PLF
Point Load 1			
Live Load:	PL1-2=	188	LB
Dead Load:	PD1-2=	98	LB
Location (From left end of span):	X1-2=	7.0	FT
Point Load 2			
Live Load:	PL2-2=	200	LB
Dead Load:	PD2-2=	118	LB
Location (From left end of span):	X2-2=	15.0	FT
Point Load 3			
Live Load:	PL3-2=	132	LB
Dead Load:	PD3-2=	138	LB
Location (From left end of span):	X3-2=	10.0	FT
Point Load 4			
Live Load:	PL4-2=	145	LB
Dead Load:	PD4-2=	162	LB
Location (From left end of span):	X4-2=	12.0	FT
Properties For: Select Structural- Douglas-Fir-Larch			
Bending Stress:	Fb=	1500	PSI
Shear Stress:	Fv=	180	PSI
Modulus of Elasticity:	E=	1900000	PSI
Adjusted Modulus of Elasticity:	E-Min=	690000	PSI
Stress Perpendicular to Grain:	Fc_perp=	625	PSI
Adjusted Properties			
Fb' (Tension):	Fb'=	1553	PSI
Adjustment Factors: Cd=1.15 CF=0.90			
Fv':	Fv'=	207	PSI
Adjustment Factors: Cd=1.15			
Design Requirements:			
Controlling Moment:	M=	6743	FT-LB
11.96 Ft from left support of span 2 (Center Span)			
Critical moment created by combining all dead loads and live loads on span(s) 2			
Controlling Shear:	V=	835	LB
At a distance d from left support of span 2 (Center Span)			
Critical shear created by combining all dead loads and live loads on span(s) 2			
Comparisons With Required Sections:			
Section Modulus (Moment):	Sreq=	52.12	IN3
	S=	75.94	IN3
Area (Shear):	Areq=	6.05	IN2
	A=	33.75	IN2
Moment of Inertia (Deflection):	Ireq=	277.22	IN4
	I=	512.58	IN4

REGISTERED PROFESSIONAL ENGINEER
SCOTT PE
OREGON
JULY 11, 2000
SCOTT BOWMAN

EXPIRES: 12-31-13