TURRENTINE ENGINEERING
Turrentine Engineering, LLC • PO Box 2465, Lebanon, Oregon 97355 • Phone: (541) 258-7004

SEISMIC BRACING ANALYSIS AND CONSTRUCTION REQUIREMENTS FOR THE SUSPENDED A.C.T. CEILING SYSTEM

FOR:

CROWN PLAZA - FLOORS 3 THRU 5

1500 SW FIRST AVE.
PORTLAND, OR 97201

REGISTERED PROFESSIONAL ENGINEER
72198PE
OREGON
July 15, 2003
SHAWN E. TURRENTINE
EXPIRES: 6/30/14

CLIENT : HARLEN'S DRYWALL CO.
JOB NO.: 121003
PREPARED BY : SET
CHECKED BY : .
DATE : 10-5-12

CODE:	2010 OSSC / ASCE 7-05 SEISMIC DESIGN CATEGORY = D SITE CLASS = D (ASSUMED) Ip = 1.0 Sds = 0.727
TYPE OF GRID:	ARMSTRONG 7501 MAIN RUNNERS W/ XL CROSS TEE HEAVY DUTY SYSTEM SEE DETAIL **"A"** FOR MORE INFO.
STRUCTURE ABOVE CEILING:	CONCRETE SLAB ON CONCRETE BEAMS (WAFFLE SLAB) f'c = 3000 psi, ASSUMED
COMPRESSION STRUTS (POSTS):	1 5/8"-20 GA STUDS W/ 1 1/4" FLANGES (162S125-30) UP TO 6'-0" TALL SEE DETAIL **"B"** FOR MORE INFO.
FASTENERS FOR SPLAY WIRES:	3/8" HILTI KWIKI BOLT TZ W/ 2" EMBEDMENT SEE DETAIL **"B"** FOR MORE INFO.
DIAGONAL WIRE SPLAYS:	12 GA
STRUT AND SPLAY SPACING (MAX):	16'-0" O.C. x 16'-0" MAX EA. WAY AND 8'-0" FROM WALLS (NOT REQUIRED FOR CEILING AREAS LESS THAN 1000 S.F.)

NOTES:

IN REFERENCE TO ASCE 7-05 SECTION 13.5.6.2.2:

1.) IN LIEU OF THE 2.0 INCH CLOSURE ANGLE REQUIREMENTS OF ASCE 7-05, THE PERIMETER OF EACH CEILING AREA SHALL BE INSTALLED PER DETAIL **"C"**.

2.) FOR CEILING AREAS EXCEEDING 1000 S.F., HORIZONTAL RESTRAINT OF THE CEILING TO THE STRUCTURAL SYSTEM SHALL BE PROVIDED. THESE RESTRAINTS SHALL BE IN THE FORM STRUTS AND SPLAYS AS NOTED ABOVE.

3.) **SEISMIC SEPARATION JOINTS:** AN ANALYSIS OF THE BRACING SYSTEM HAS BEEN PROVIDED ON PAGES 12 AND 13 TO SHOW THAT CEILING PENETRATIONS AND THE PERIMETER CLOSURE ANGLE/SYSTEM PROVIDE SUFFICIENT CLEARANCE TO ACCOMMODATE THE ANTICIPATED LATERAL DISPLACEMENT OF THE CEILING, THEREBY ELIMINATING THE NEED FOR SEISMIC SEPARATION JOINTS. REF: ASCE 7-05 SECTION 13.5.6.2.2.d.

4.) ALL ELEMENTS OF THE SUSPENDED CEILING SYSTEM NOT SPECIFICALLY ADDRESSED WITHIN THESE CALCULATIONS ARE TO BE INSTALLED PER THE REQUIREMENTS OF THE NORTHWEST WALL & CEILING BUREAU TECHNICAL BULLETIN 401, FOUND AT: www.nwcb.org

STATEMENT OF SPECIAL INSPECTIONS:

1.) WHERE REQUIRED AS NOTED IN THE DRAWINGS, THESE NOTES, OR THE CONTRACT DOCUMENTS. SPECIAL INSPECTIONS SHALL CONFORM TO CHAPTER 17 OF THE IBC.

2.) PERIODIC SPECIAL INSPECTION IS REQUIRED FOR THE HILTI KWIK-BOLT TZ ANCHORS NOTED IN THESE DRAWINGS. REF: ICC ESR-1917.

Project:	CROWN PLAZA - FLOORS 3 THRU 5	Page:	3
Client:	HARLEN'S DRYWALL CO.	By:	SET
Job No.:	121003	Date:	10-5-12

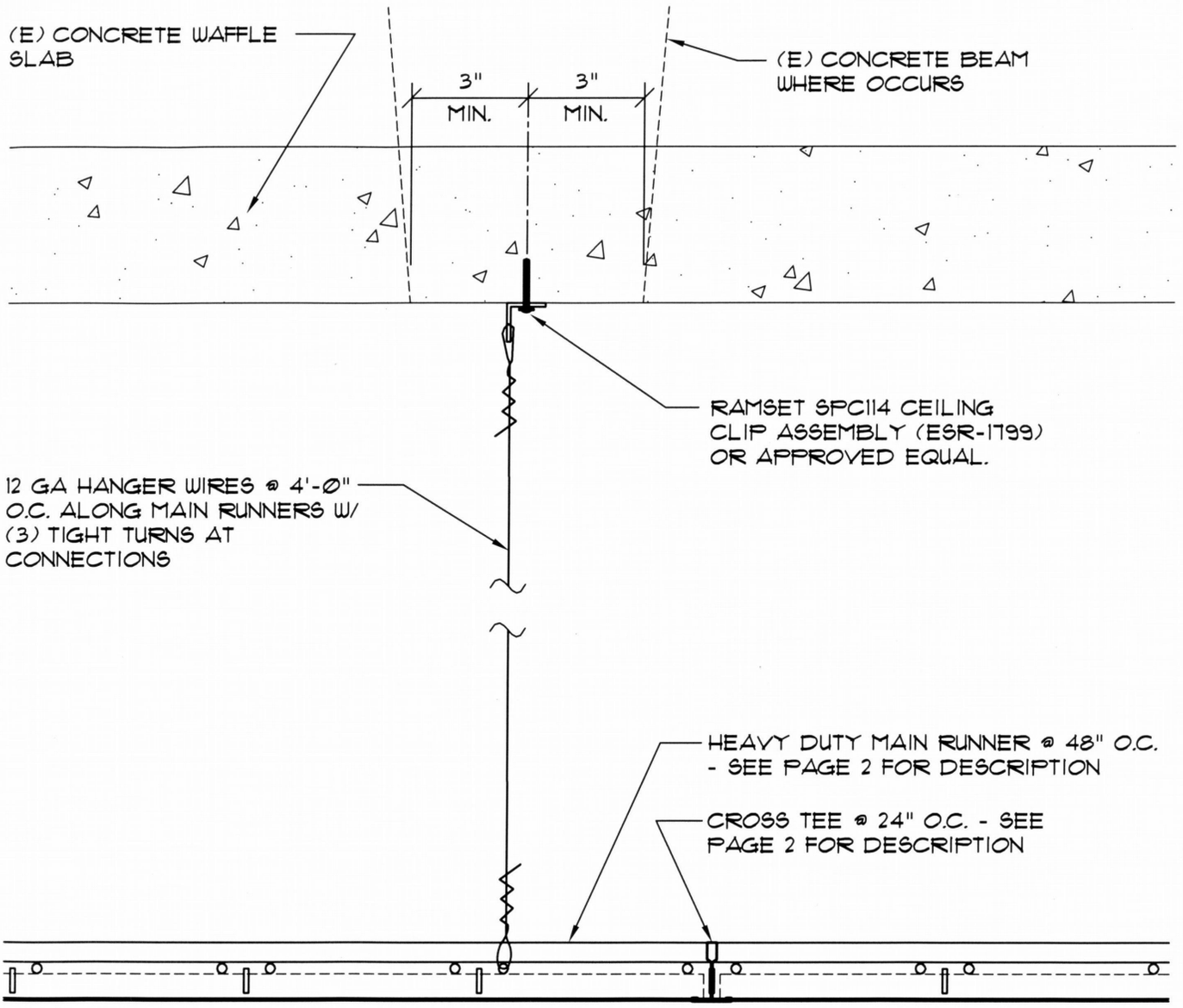

NOTES:

THE PERIMETER OF THE CEILING SYSTEM SHALL BE INSTALLED PER THE REQUIREMENTS OF DETAIL "C".

IN ADDTION, CEILING PENETRATIONS SUCH AS COLUMNS, SHALL BE PROVIDED WITH AN "UNATTACHED" INSTALLATION PER DETAIL "C" ON ALL SIDES IF GRID MEMBERS HAPPEN TO ALIGN WITH THE PENETRATION. THE CEILING TILE SURROUNDING PENETRATIONS SHALL BE CUT TO ALLOW 3/4" MIN. SPACE AT SUCH PENETRATIONS ON ALL SIDES.

A

TYP. CEILING CONSTRUCTION

Project:	CROWN PLAZA - FLOORS 3 THRU 5	Page:	4
Client:	HARLEN'S DRYWALL CO.	By:	SET
Job No.:	121003	Date:	10-5-12

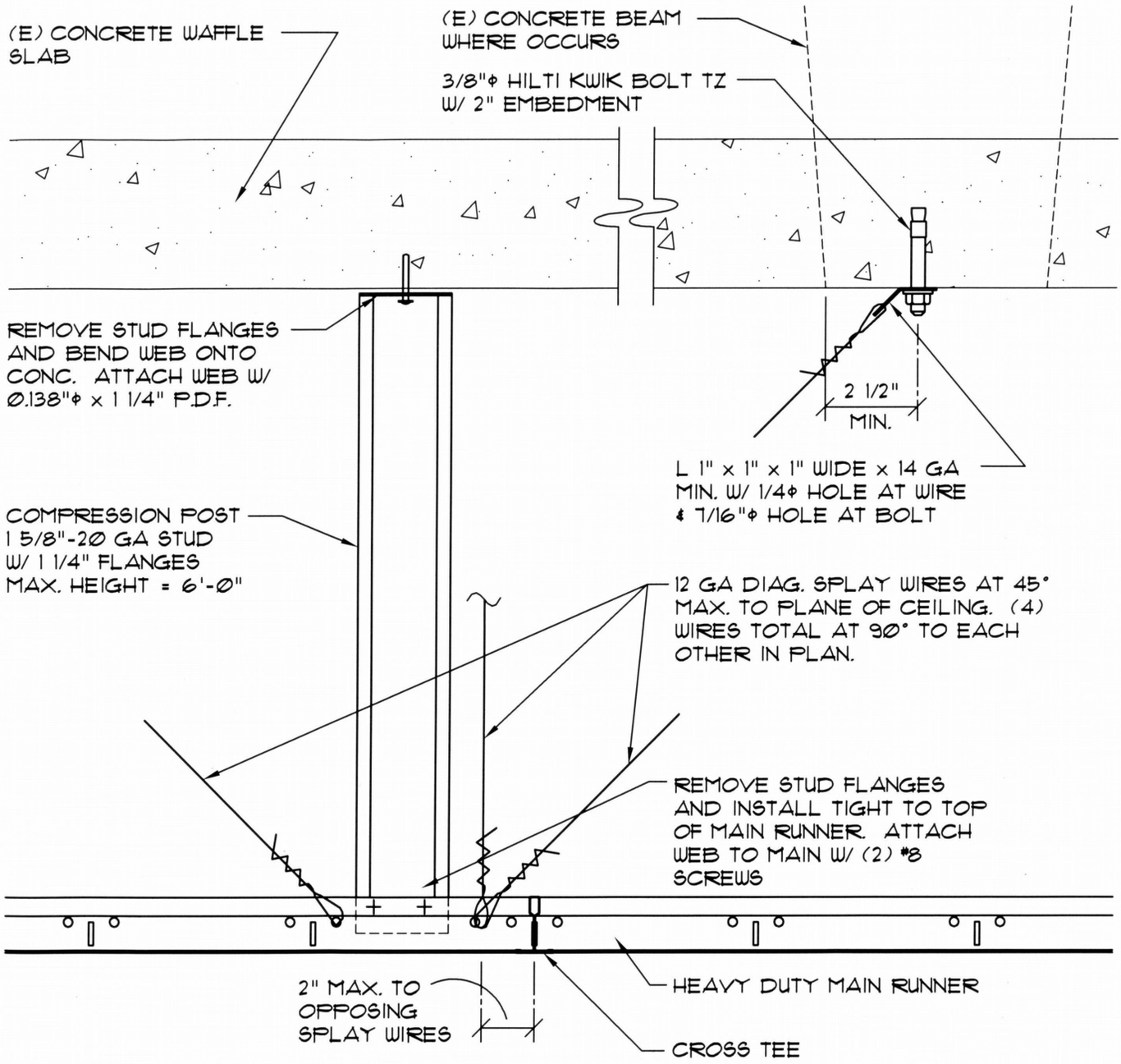

REF: PAGE 2 FOR BRACE SPACING REQUIREMENTS.

B SEISMIC BRACE DETAIL

Project:	CROWN PLAZA - FLOORS 3 THRU 5	Page:	5
Client:	HARLEN'S DRYWALL CO.	By:	SET
Job No.:	121003	Date:	10-5-12

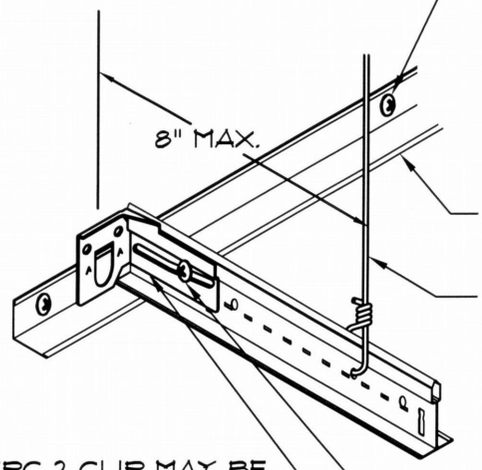

* BERC 2 CLIP MAY BE SCREW-ATTACHED TO VERT. LEG OF CLOSURE ANGLE IN LIEU HOOKING TAB BEHIND ANGLE. USE (2) #6 SCREWS

1 ATTACHED WALL OPTION 1 OF 2

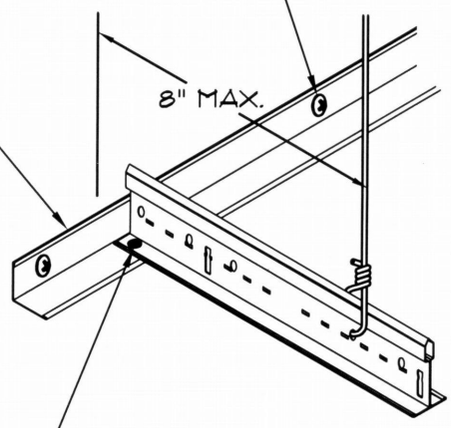

2 ATTACHED WALL OPTION 2 OF 2

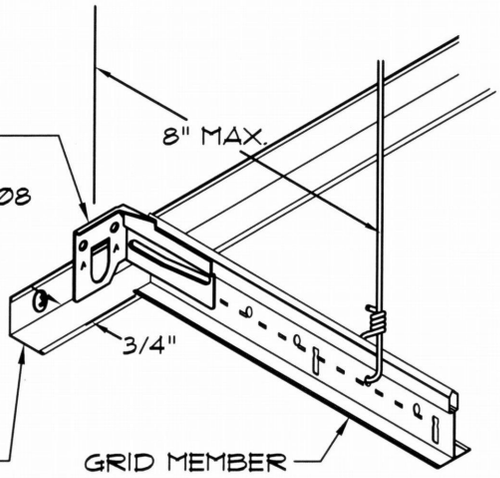

NOTES:
IN EACH ORTHOGONAL HORIZONTAL DIRECTION ONE END OF THE CEILING SHALL BE ATTACHED TO THE CLOSURE ANGLE PER DETAIL 1 OR 2. THE OTHER END IN EACH ORTHOGONAL DIRECTION SHALL BE FREE TO SLIDE ON THE CLOSURE ANGLE AS PER DETAIL 3. REF: ICC-ESR 1308 FOR ADDITIONAL INFO.

3 UNATTACHED WALL

C PERIMETER DETAILS

LATERAL FORCE:

REF: ASCE 7-05, SECTION 13.3
Using ASD load combination including 0.7E, where $E = Q_E = F_p$

			Ref:
$a_P =$	1.00		[T13.5-1]
$S_{DS} =$	0.727	From project specifications or calculated using USGS Seismic Ground Motion Calculator with assumed Site Class = D	
$W_p =$	4.00 psf		[13.5.6.1]
$I_p =$	1.00		[13.1.3]
$R_p =$	2.50	For bracing components except anchors in concrete.	[T13.5-1]
$R_p =$	1.50	For anchors in concrete not governed by the strength of a ductile steel element or not complying w/ ACI 355.2.	[13.4.2]
z =	73.00 ft	APPROX. 6TH FLOOR ELEV. (CLG. ATTACHMENT ELEV.)	
h =	147.00 ft	APPROX. ROOF ELEV.	

For all bracing components except anchors in concrete:

$F_p = (0.7)(0.4)a_pS_{DS}W_p(1/(R_p/I_p))(1+2(z/h))$ = 0.65 psf [13.3-1]

For anchors in concrete not governed by the strength of a ductile steel element or not complying w/ ACI 355.2:

$F_{p2} = (0.7)(1.3)(0.4)a_pS_{DS}W_p(1/(R_p/I_p))(1+2(z/h))$ = 1.41 psf [13.3-1],[13.4.2]

$F_{pMAX} = (0.7)1.6S_{DS}I_pW_p$ = 3.26 psf [13.3-2]

$F_{pMIN} = (0.7)0.3S_{DS}I_pW_p$ = 0.61 psf [13.3-3]

USE F_p = **0.65 psf**

USE F_{p2} = **1.41 psf**

Spacing of struts and splays, x-dir = 16 ft
Spacing of struts and splays, y-dir = 16 ft
Tributary Area = (x-dir)(y-dir) = 256 sq. ft.

Lateral force at each seismic brace location:

$F_{pBRACE} = F_p$ x Tributary area = **166 lbs**

Lateral force for concrete anchor design (when applicable):

$F_{p2\ BRACE} = F_{p2}$ x Tributary area = **360 lbs**, shear and tension in anchor

Compression force in struts with splays at 45 degrees:

$P_{POST} = F_{pBRACE}$ x Tan 45° = **166 lbs**

Splay wire anchor loading:

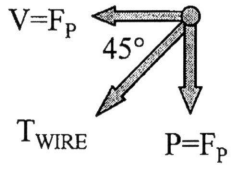

2007 NASPEC

Project: CROWN PLAZA - FLOORS 3 THRU 5 **Date:** 10/3/2012
Model: COMPRESSION POSTS

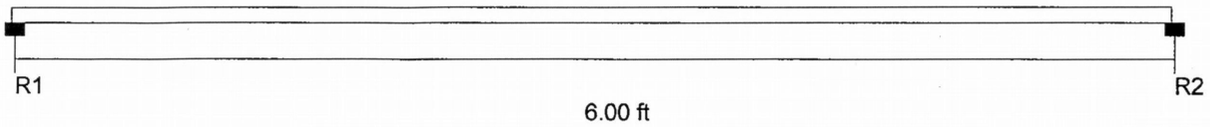

Section : 162S125-30 Single C Stud (X-X Axis) **Fy =** 33.0 ksi
Maxo = 99.2 Ft-Lb **Moment of Inertia, I =** 0.060 in^4 **Va =** 543.0 lb

Loads have not been modified for strength checks
Loads have not been modified for deflection calculations

Flexural and Deflection Check

Span	Mmax Ft-Lb	Mmax/ Maxo	Mpos Ft-Lb	Bracing (in)	Ma(Brc) Ft-Lb	Mpos/ Ma(Brc)	Deflection (in)	Ratio
Center Span	0.0	0.000	0.0	None	64.6	0.000	0.000	L/0

Distortional Buckling Check

Span	K-phi lb-in/in	Lm Brac (in)	Ma-d Ft-Lb	Mmax/ Ma-d
Center Span	0.00	72.0	107.8	0.000

Combined Bending and Web Crippling

Reaction or Pt Load	Load P(lb)	Brng (in)	Pa (lb)	Pn (lb)	Mmax (Ft-Lb)	Intr. Value	Stiffen Req'd ?
R1	0.0	1.00	147.5	258.2	0.0	0.00	No
R2	0.0	1.00	147.5	258.2	0.0	0.00	No

Combined Bending and Shear

Reaction or Pt Load	Vmax (lb)	Mmax (Ft-Lb)	Va Factor	V/Va	M/Ma	Intr. Unstiffen	Intr. Stiffen
R1	0.0	0.0	1.00	0.00	0.00	0.00	NA
R2	0.0	0.0	1.00	0.00	0.00	0.00	NA

Combined Bending and Axial Load

Span	Axial Ld (lb)	Bracing (in) KyLy	KtLt	Max KL/r	K-phi (in-lb/in)	Lm Brac (in)	Allow Ld (lb)	P/Pa	Intr. Value
Center Span	166.0 (c)	None	None	163	0.0	72.0	266.9 (c)	0.62	0.62

CHECK DIAG. WIRE SPLAYS : 12 GA

CAPACITY OF WIRE = 0.60 Fy A
= (0.60)(55,000)(0.0088)
= 290#

TENSION IN WIRE = $166 / \text{Cos } 45°$ = 235# < 290# OK

CHECK FASTENERS : 3/8" HILTI KWIK BOLT TZ W/ 2" EMBEDMENT
IN 3000 psi CRACKED CONCRETE (REF: ICC ESR-1917)

* SEE FOLLOWING PAGES FOR ANALYSIS

CHECK GRID : MAIN RUNNERS : ARMSTRONG 7501
CROSS TEES : ARMSTRONG XL 7540

CAPACITY OF CONNECTIONS (POUNDS):

MAIN RUNNER IN TENSION	:	335
MAIN RUNNER IN COMPRESSION	:	335
CROSS TEE IN TENSION	:	352
CROSS TEE IN COMPRESSION	:	352

* CONTROLLING VALUE = 335

SAFETY FACTOR = 2

SAFE CAPACITY = $335 / 2$ = 167.5

ASSUME \ OF GRID IS IN TENSION
WHILE \ IS IN COMPRESSION

∴ CAPACITY = (167.5)(2) = 335

335# > 166# OK

www.hilti.us

Profis Anchor 2.3.2

Company:	Turrentine Engineering, LLC	Page:	1
Specifier:		Project:	Crown Plaza - Flrs 3-5
Address:		Sub-Project I Pos. No.:	
Phone I Fax:	|	Date:	10/3/2012
E-Mail:			

Specifier's comments: BY INSPECTION, ANCHOR IN BOT. OF BEAM IS WORST CASE CONDITION.

1 Input data

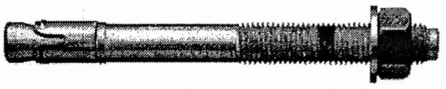

Anchor type and diameter:	**Kwik Bolt TZ - CS 3/8 (2)**
Effective embedment depth:	h_{ef} = 2.000 in., h_{nom} = 2.313 in.
Material:	Carbon Steel
Evaluation Service Report::	ESR 1917
Issued I Valid:	4/1/2012 | 5/1/2013
Proof:	design method ACI 318 / AC193
Stand-off installation:	- (Recommended plate thickness: not calculated)
Profile:	no profile
Base material:	cracked concrete, 3000, f_c' = 3000 psi; h = 16.000 in.
Reinforcement:	tension: condition B, shear: condition B; no supplemental splitting reinforcement present edge reinforcement: none or < No. 4 bar
Seismic loads (cat. C, D, E, or F)	yes (D.3.3.5)

Geometry [in.] & Loading [lb, in.lb]

$F_{P_2\ BRACE} = 360^{\#}$

$N_u = V_u = \frac{360}{0.7} = \underline{514^{\#}}$

REMOVE A.S.D. FACTOR

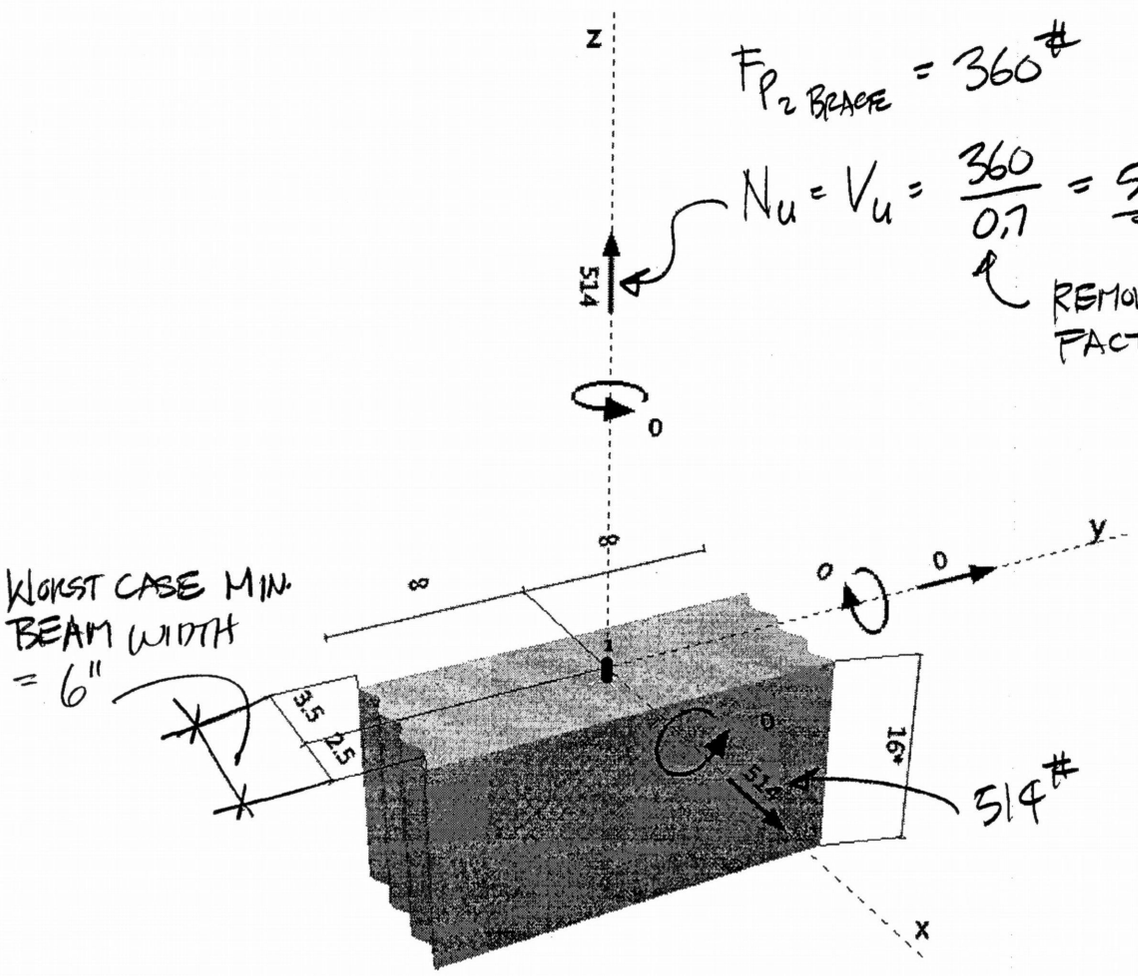

WORST CASE MIN. BEAM WIDTH = 6"

Company:	Turrentine Engineering, LLC	Page:	2
Specifier:		Project:	Crown Plaza - Flrs 3-5
Address:		Sub-Project I Pos. No.:	
Phone I Fax:	|	Date:	10/3/2012
E-Mail:			

2 Load case/Resulting anchor forces

Load case: Design loads

Anchor reactions [lb]
Tension force: (+Tension, -Compression)

Anchor	Tension force	Shear force	Shear force x	Shear force y
1	514	514	514	0

max. concrete compressive strain: - [‰]
max. concrete compressive stress: - [psi]
resulting tension force in (x/y)=(0.000/0.000): 0 [lb]
resulting compression force in (x/y)=(0.000/0.000): 0 [lb]

3 Tension load

	Load N_{ua} [lb]	Capacity ϕN_n [lb]	Utilization $\beta_N = N_{ua}/\phi N_n$	Status
Steel Strength*	514	4875	11	OK
Pullout Strength*	514	1212	43	OK
Concrete Breakout Strength**	514	1118	46	OK

* anchor having the highest loading **anchor group (anchors in tension)

3.1 Steel Strength

N_{sa} [lb]	ϕ	ϕN_{sa} [lb]	N_{ua} [lb]
6500	0.750	4875	514

3.2 Pullout Strength

N_p [lb]	$(f_c'/2500)^{0.5}$	ϕ	$\phi_{seismic}$	$\phi_{nonductile}$	$\phi N_{pn,fc}$ [lb]
2270	1.095	0.650	0.750	1.000	1212

3.3 Concrete Breakout Strength

A_{Nc} [in.^{2}]	A_{Nc0} [in.^{2}]	$c_{a,min}$ [in.]	c_{ac} [in.]	$\psi_{c,N}$
33.00	36.00	2.500	4.000	1.000

$e_{c1,N}$ [in.]	$\psi_{ec1,N}$	$e_{c2,N}$ [in.]	$\psi_{ec2,N}$	$\psi_{ed,N}$	$\psi_{cp,N}$	k_{cr}
0.000	1.000	0.000	1.000	0.950	1.000	17.000

N_b [lb]	ϕ	$\phi_{seismic}$	$\phi_{nonductile}$	ϕN_{cbg} [lb]	N_{ua} [lb]
2634	0.650	0.750	1.000	1118	514

PROFIS Anchor (c) 2003-2009 Hilti AG, FL-9494 Schaan Hilti is a registered Trademark of Hilti AG, Schaan

Company:	Turrentine Engineering, LLC	Page:	3
Specifier:		Project:	Crown Plaza - Flrs 3-5
Address:		Sub-Project I Pos. No.:	
Phone I Fax:	|	Date:	10/3/2012
E-Mail:			

4 Shear load

	Load V_{ua} [lb]	Capacity ϕV_n [lb]	Utilization $\beta_V = V_{ua}/\phi V_n$	Status
Steel Strength*	514	1466	36	OK
Steel failure (with lever arm)*	N/A	N/A	N/A	N/A
Pryout Strength**	514	1204	43	OK
Concrete edge failure in direction x+**	514	681	76	OK

* anchor having the highest loading **anchor group (relevant anchors)

4.1 Steel Strength

V_{sa} [lb]	ϕ	ϕV_{sa} [lb]	V_{ua} [lb]
2255	0.650	1466	514

4.2 Pryout Strength

A_{Nc} [in.^{2}]	A_{Nc0} [in.^{2}]	$c_{a,min}$ [in.]	k_{cp}	c_{ac} [in.]
33.00	36.00	2.500	1.000	4.000

$e_{c1,V}$ [in.]	$\psi_{ec1,V}$	$e_{c2,V}$ [in.]	$\psi_{ec2,V}$	$\psi_{ed,N}$
0.000	1.000	0.000	1.000	0.950

$\psi_{c,N}$	$\psi_{cp,N}$	k_{cr}
1.000	1.000	17

N_b [lb]	ϕ	$\phi_{seismic}$	$\phi_{nonductile}$	ϕV_{cpg} [lb]	V_{ua} [lb]
2634	0.700	0.750	1.000	1204	514

4.3 Concrete edge failure in direction x+

l_e [in.]	d_0 [in.]	c_1 [in.]	A_{Vc} [in.^{2}]	A_{Vc0} [in.^{2}]
2.000	0.375	2.500	28.13	28.13

$\psi_{ed,V}$	$\psi_{parallel,V}$	$e_{c,V}$ [in.]	$\psi_{ec,V}$	$\psi_{c,V}$	$\psi_{h,V}$
1.000	1.000	0.000	1.000	1.000	1.000

V_b [lb]	ϕ	$\phi_{seismic}$	$\phi_{nonductile}$	ϕV_{cbg} [lb]	V_{ua} [lb]
1297	0.700	0.750	1.000	681	514

5 Combined tension and shear loads

β_N	β_V	ζ	Utilization $\beta_{N,V}$ [%]	Status
0.460	0.755	5/3	90	OK

$\beta_{NV} = \beta_N^{\zeta} + \beta_V^{\zeta} <= 1$

PROFIS Anchor (c) 2003-2009 Hilti AG, FL-9494 Schaan Hilti is a registered Trademark of Hilti AG, Schaan

LATERAL DISPLACEMENT ANALYSIS TO SHOW SEPARATION JOINTS ARE NOT REQUIRED:

MAX. DISPLACEMENT ACCOMMODATED BY ARMSTRONG BERC2 CLIP INSTALLATION/SYSTEM = 0.75"

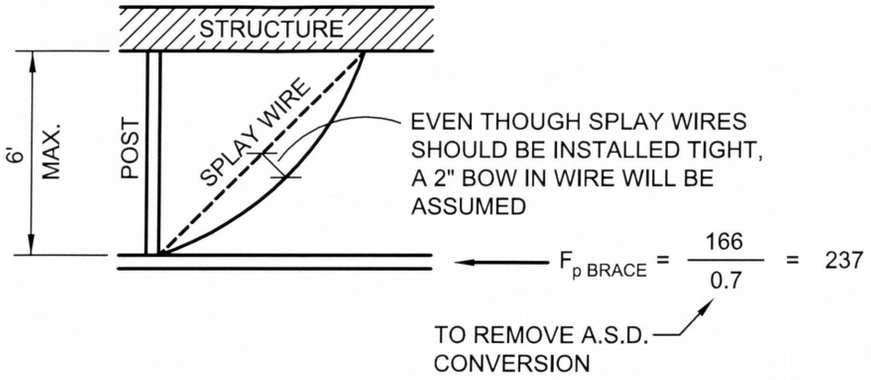

ASSUME SEISMIC FORCE WILL STRAIGHTEN/FLATTEN WIRE LOOPS BEYOND TYPICAL HAND-TIED SHAPE (THE FOLLOWING ASSUMPTIONS ARE BASED ON TYPICAL FIELD OBSERVATIONS):

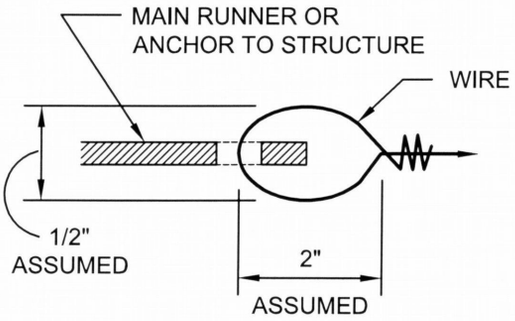

WIRE SHAPE AS TIED

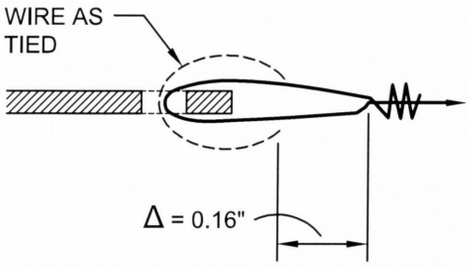

WIRE SHAPE WHEN STRAIGHTENED

-CONT'D-

LATERAL DISPLACEMENT ANALYSIS, CONT'D:

WIRE LENGTH INCREASE DUE TO BOW STRAIGHTENING:

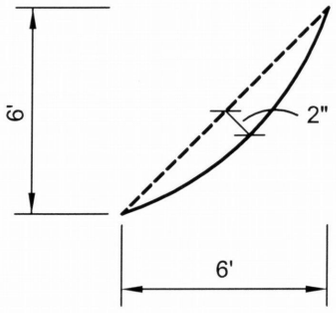

AS TIED STRAIGHT DISTANCE = $(6)(12)\sqrt{2}$ = 102"

BOW LENGTH = 102.10"

Δ = 102.10 - 102 = 0.10"

WIRE ELONGATION:

$$\delta = \frac{PL}{AE}$$

$$P = \frac{F_{p\ BRACE}}{\cos 45°} = \frac{237}{\cos 45°} = 335\#$$

L = 102.10"

A = 0.0088 in^2

E = 29,000,000 psi

$$\delta = \frac{(335)(102.10)}{(0.0088)(29{,}000{,}000)} = 0.13"$$

POST SHORTENING DUE TO COMPRESSION IS NEGLIBLE.

ALL WIRE RELATED LENGENTHING OCCURS AT 45° OFF OF HORIZONTAL

$$\Delta_{TOTAL} = \cos 45° \left[\left(2 \times \text{LOOP STRAIGHTENING} \right) + \left(\text{BOW STRAIGHTENING} \right) + \left(\text{WIRE ELONGATION} \right) \right]$$

$$= \cos 45° \left[(2 \times 0.16) + (0.10) + (0.13) \right]$$

$$= \underline{\underline{0.39"}}$$

0.39" < 0.75"

∴ SEPARATION JOINTS ARE NOT NEEDED

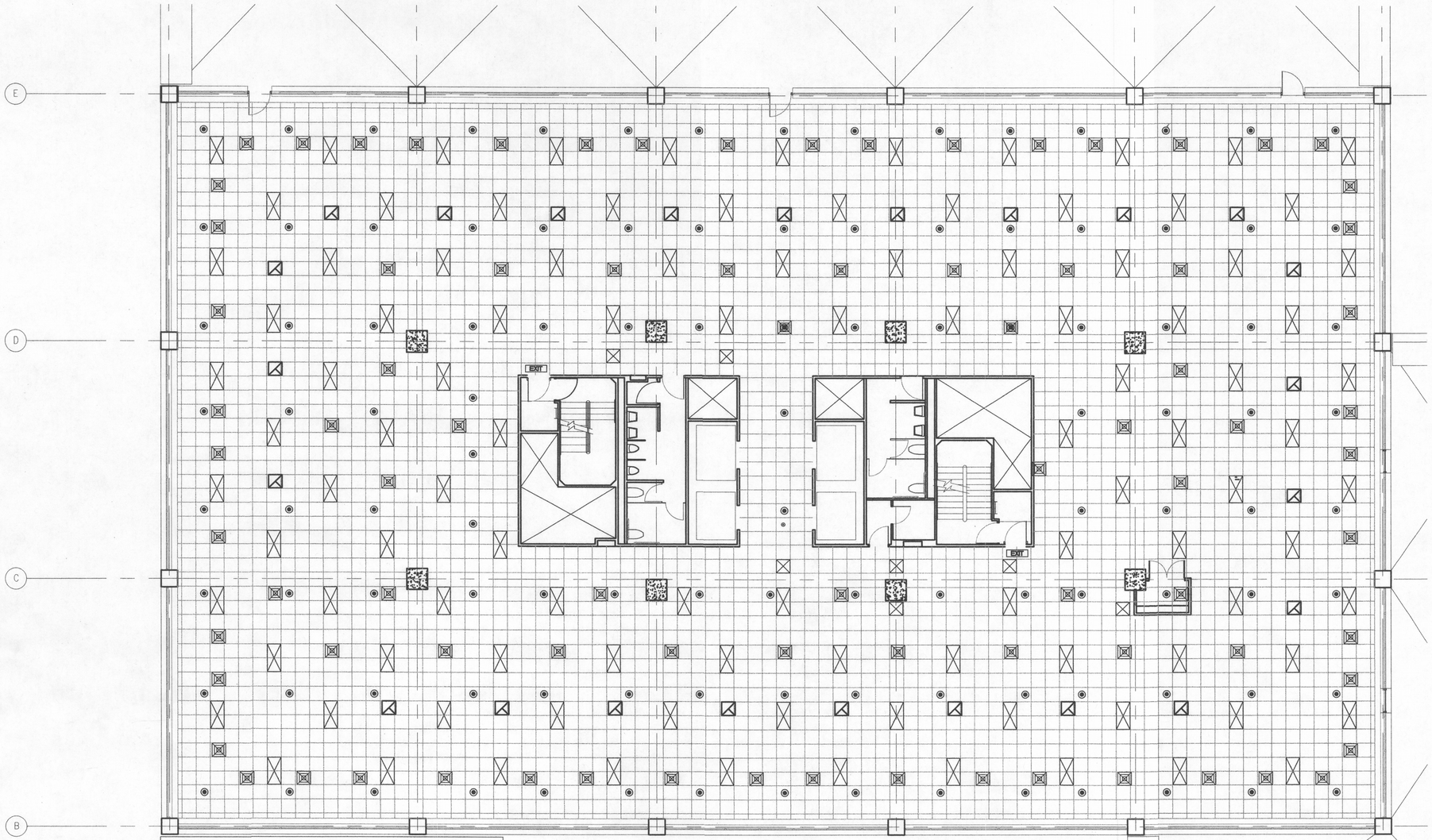

CROWN BUILDING - 3RD FL. CEILING 1
SCALE: 1/8" = 1'-0"

LEGEND

- Existing structural wall and non-load bearing partitions
- New Sprinkler head location | revise as needed
- New S/A diffuser. Revise per building engineer's recommendations
- New R/A diffuser. Revise per building engineer's recommendations
- New 2'x4' building standard fluorescent light fixture
- E Emergency lighting
- $ New (unless noted) single pole switch up 48" from floor and 6" horizontally from knob side of door unless otherwise noted
- (T) Existing thermostat - relocate per building engineer's recommendations
- EXIT New (unless noted) lighted exit sign building standard

GENERAL NOTES

1. ALL NEW CEILING FOR UNOCCUPIED SPACE ON 3RD, 4TH, AND 5TH FLOORS. 9/16 2X4 SECOND LOOK TEGULAR TILE SYSTEM.

SEE SEISMIC BRACING NOTES- ATTACHED

Egress lighting will need to be addressed with future Tenant improvements

City of Portland
REVIEWED FOR CODE COMPLIANCE
OCT 25 2012
12-194243-PA
Permit Number

REGISTERED ARCHITECT • DAVID R. BROWN III • PORTLAND, OREGON • STATE OF OREGON

MELVIN MARK PROPERTIES
111 SOUTHWEST COLUMBIA
PORTLAND, OREGON 97201
(503) 223-4777

CAD DWG FILE : CPSL CLG PLAN.dwg

DRAWING NAME: CLG PLAN

3RD FLOOR - CEILING PLAN

CROWN PLAZA
1500 SW FIRST AVE. PORTLAND OR 97201

DATE : 10/8/12
REVISIONS :

12-194243-PA

SHEET NO. 1 OF 3

PROJECT NO: X5822

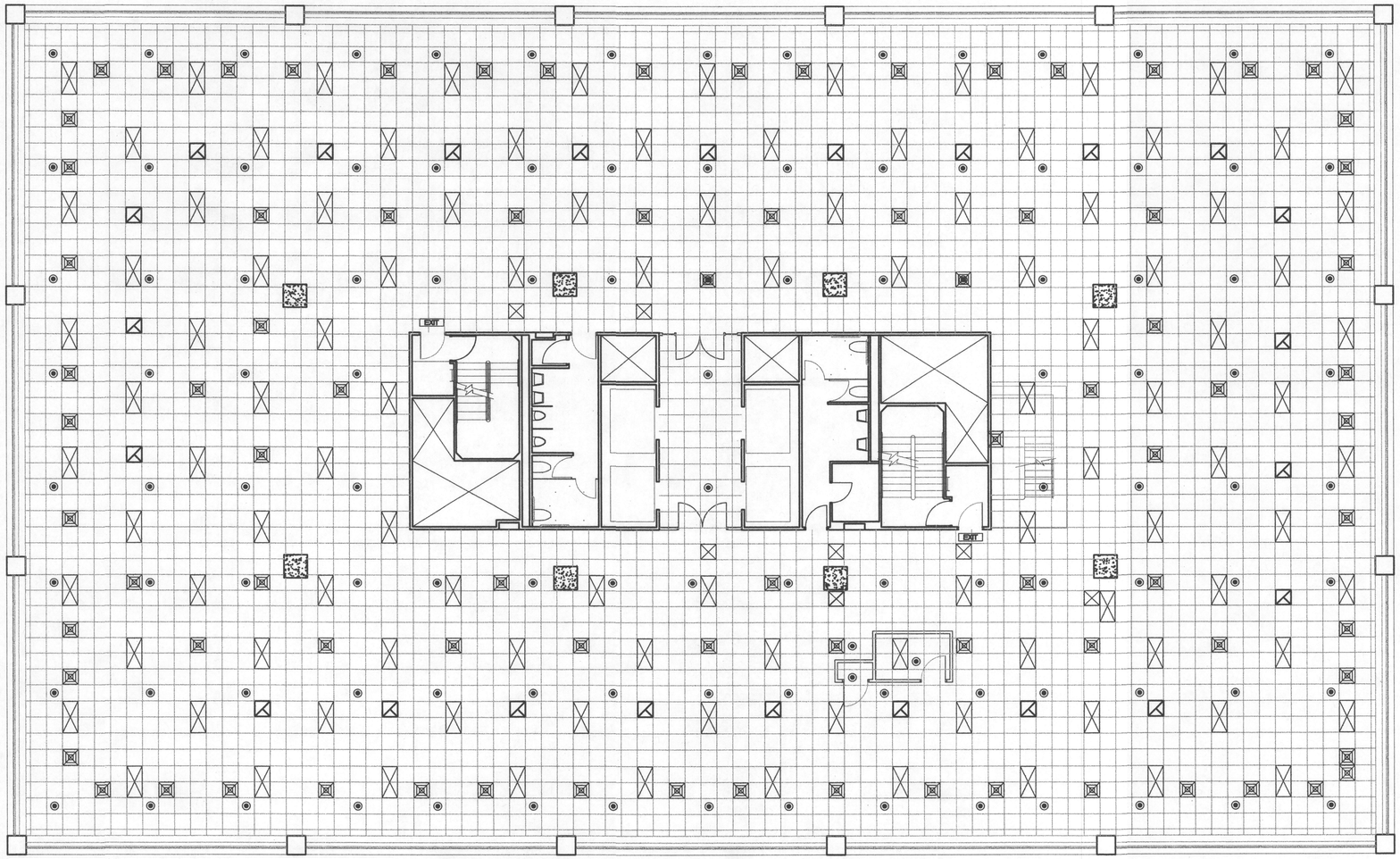

CROWN BUILDING - 4TH FLOOR NEW CEILING 1
SCALE: 1/8" = 1'-0"

LEGEND

- Existing structural wall and non-load bearing partitions
- New Sprinkler head location revise as needed
- New S/A diffuser. Revise per building engineer's recommendations
- New R/A diffuser. Revise per building engineer's recommendations
- New 2'x4' building standard fluorescent light fixture
- E Emergency lighting
- $ New (unless noted) single pole switch up 48" from floor and 6" horizontally from knob side of door unless otherwise noted
- T Existing thermostat - relocate per building engineer's recommendations
- EXIT New (unless noted) lighted exit sign building standard

GENERAL NOTES

1. ALL NEW CEILING FOR UNOCCUPIED SPACE ON 3RD, 4TH, AND 5TH FLOORS. 9/16 2X4 SECOND LOOK TEGULAR TILE SYSTEM.
   SEE SEISMIC BRACING NOTES- ATTACHED

REGISTERED ARCHITECT • DAVID R BROWN III • PORTLAND, OREGON • STATE OF OREGON

MELVIN MARK PROPERTIES
111 SOUTHWEST COLUMBIA
PORTLAND, OREGON 97201
(503) 223-4777

CAD DWG FILE : CP4L CLG PLAN

DRAWING NAME: CLG. PLAN

4TH FLOOR - CEILING PLAN
CROWN PLAZA
1500 SW FIRST AVE. PORTLAND OR 97201

DATE : 10/3/12
REVISIONS :

SHEET NO. 2 OF 3

PROJECT NO: X5822

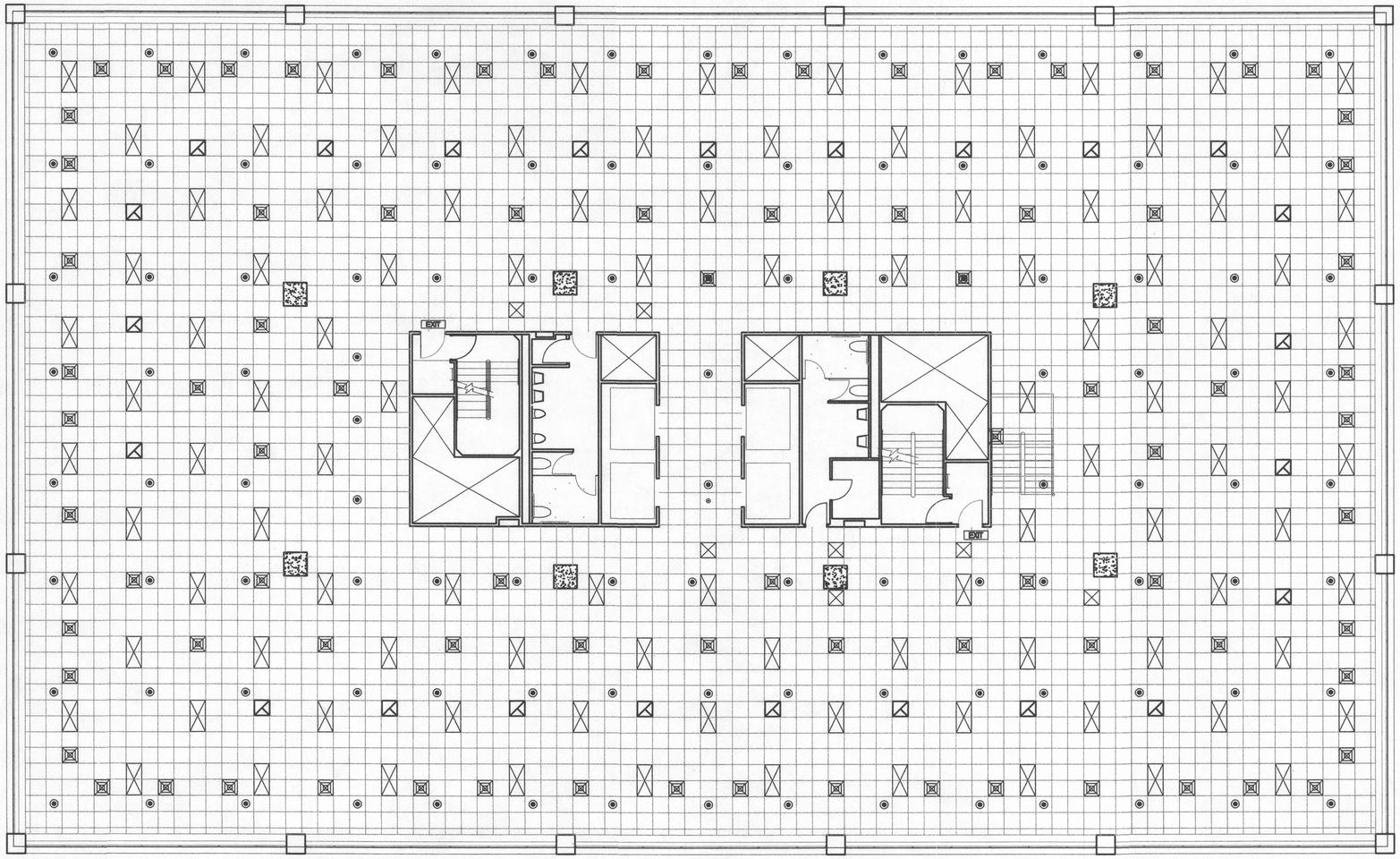

LEGEND

- Existing structural wall and non-load bearing partitions
- New Sprinkler head location revise as needed
- New S/A diffuser. Revise per building engineer's recommendations
- New R/A diffuser. Revise per building engineer's recommendations
- New 2'x4' building standard fluorescent light fixture
- Emergency lighting
- New (unless noted) single pole switch up 48" from floor and 6" horizontally from knob side of door unless otherwise noted
- Existing thermostat - relocate per building engineer's recommendations
- EXIT New (unless noted) lighted exit sign building standard

CROWN BUILDING - 5TH FLOOR NEW CEILING PLAN 1
SCALE: 1/8" = 1'-0"

GENERAL NOTES

1. ALL NEW CEILING FOR UNOCCUPIED SPACE ON 3RD, 4TH, AND 5TH FLOORS. 9/16 2X4 SECOND LOOK TEGULAR TILE SYSTEM.

   SEE SEISMIC BRACING NOTES- ATTACHED

REGISTERED ARCHITECT • DAVID R. BROWN III • S. PORTLAND, OREGON • STATE OF OREGON

MELVIN MARK PROPERTIES
111 SOUTHWEST COLUMBIA
PORTLAND, OREGON 97201
(503) 223-4777

CAD DWG FILE : CPSL CLG PLAN

DRAWING NAME: CLG PLAN

5TH FLOOR - CEILING PLAN
CROWN PLAZA
1500 SW FIRST AVE. PORTLAND OR 97201

DATE : 10/3/12
REVISIONS :

SHEET NO. 3 OF 3

PROJECT NO: X5822