FPP Structural Checksheet Response

Permit #: 10-177932-000-00-FA **Date:** 10/1/10

Customer name and phone number: HOBIE MILLER (303) 262-2342

Note: *Please number each change in the '#' column. Use as many lines as necessary to describe your changes. Indicate which reviewer's checksheet you are responding to and the item your change addresses. If the item is not in response to a checksheet, write* **customer** *in the last column.*

#	Description of changes, revisions, additions, etc.	Checksheet and item #
1	ATTACHED EXISTING STRUCTURAL DWG ~~SH~~ SHOWING DETAIL OF	~~FPP~~ FPP STRUCTURAL #1
	BASE SUPPORTING THE COOLING TOWER	
2	THE LONGITUDINAL BEAMS ARE WELDED TO THE	FPP STRUCTURAL #2
	TRAVERSE SUPPORT BEAMS.	

(for office use only)

MASON INDUSTRIES, Inc.
Manufacturers of Vibration Control Products
350 Rabro Drive
Hauppauge, NY 11788
631/348-0282
FAX 631/348-0279
TELEX 96-8464
2101 W. Crescent Ave., Suite D
Anaheim, CA 92801
714/535-2727
FAX 714/535-5738

BEAM TO BEAM BOLTED CONNECTION

DETAIL SHEET WD-12261226

W12X26 TO W12X26

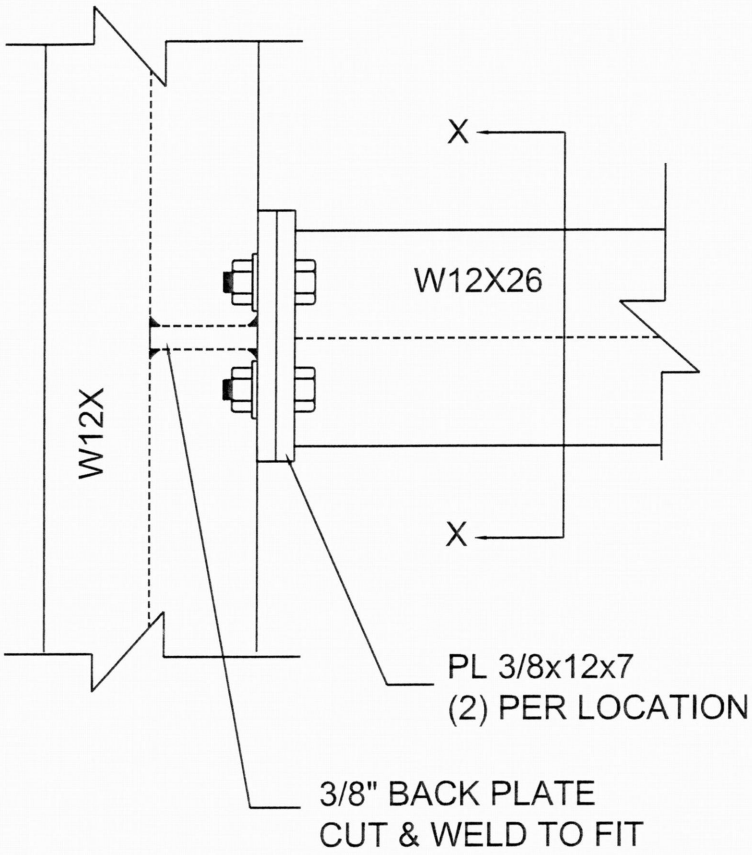

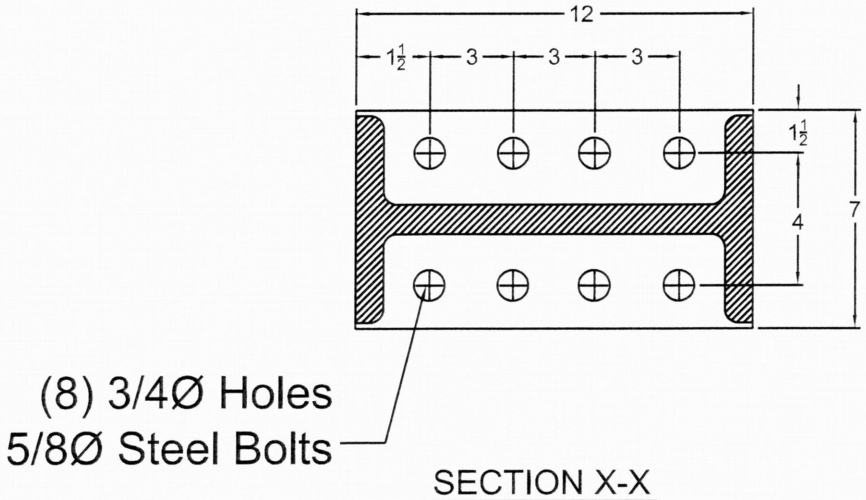

SECTION X-X

DWN	CHKD	DATE	DWG NO.
LD		10/25/01	WD-12261226

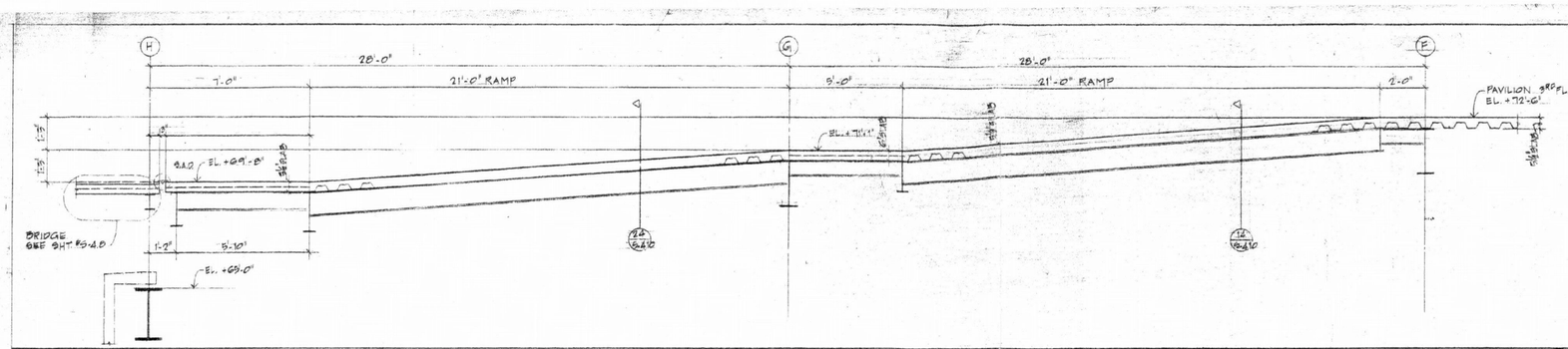

3RD FLOOR PAVILION RAMP LONGITUDINAL SECTION — SCALE: 1/2"=1'-0"

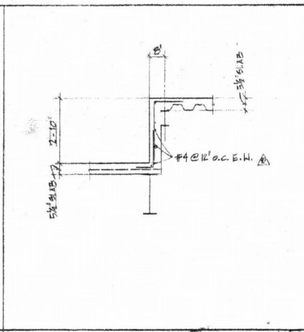

SECTION — SCALE: 1/2"=1'-0"

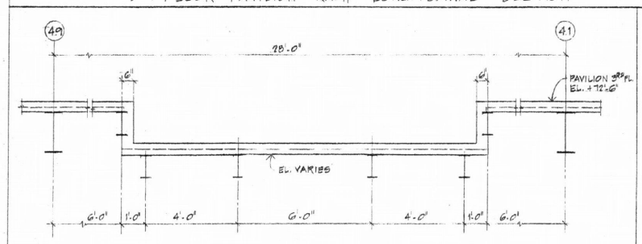

3RD FLOOR PAVILION RAMP SECTION — SCALE: 1/2"=1'-0"

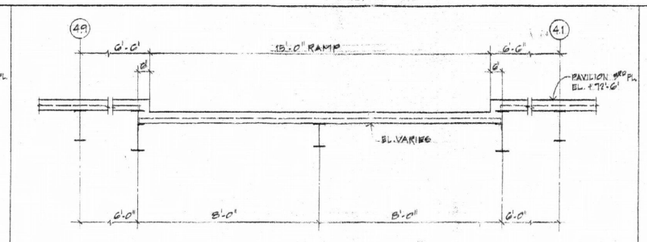

3RD FLOOR PAVILION RAMP SECTION — SCALE: 1/2"=1'-0"

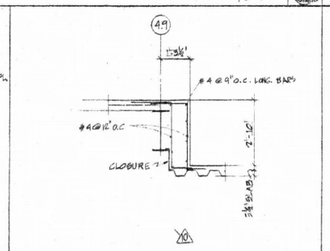

SECTION — SCALE: 1/2"=1'-0"

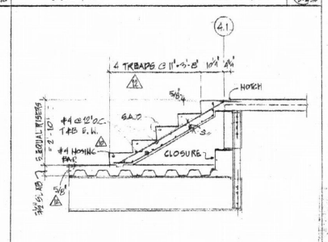

SECTION — SCALE: 1/2"=1'-0"

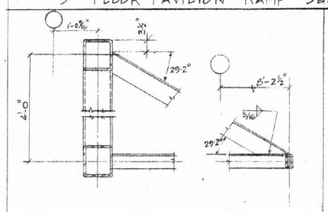

NOTE: FOR DETAILS NOT CALLED, SEE DET. 15-D-4.10 SIMILAR

DETAIL

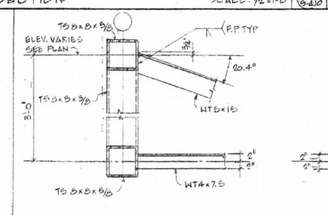

DETAIL

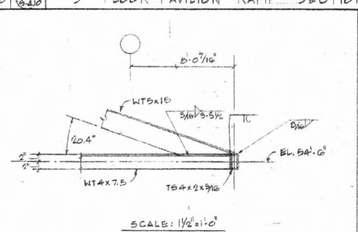

SCALE: 1 1/2"=1'-0"

DETAIL

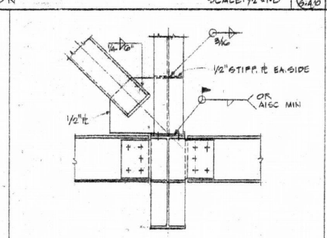

DETAIL

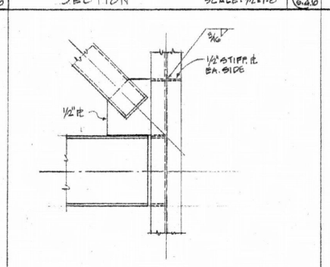

DETAIL

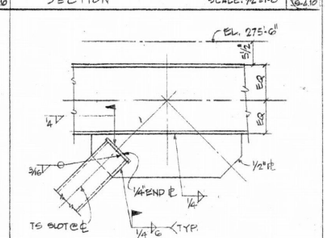

DETAIL

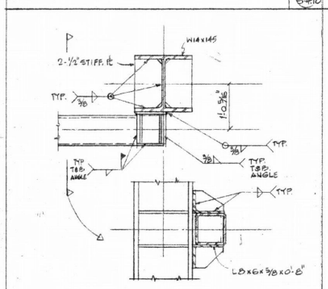

DETAIL

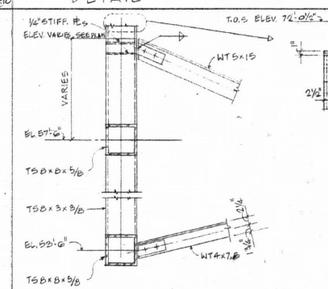

DETAIL

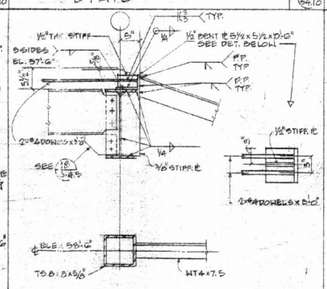

DETAIL

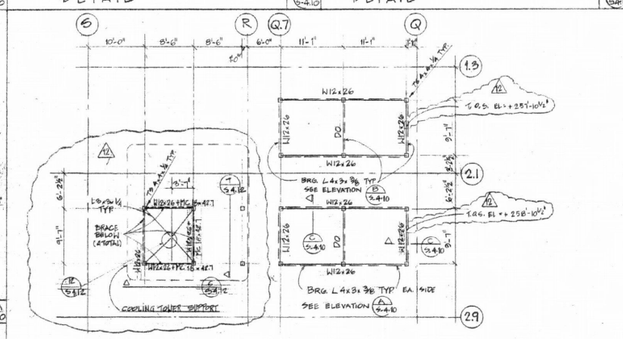

PARTIAL PLAN
SCALE: 1/8"=1'-0"

SECT. — SCALE: 3/8"=1'-0"

DET.

SECT.

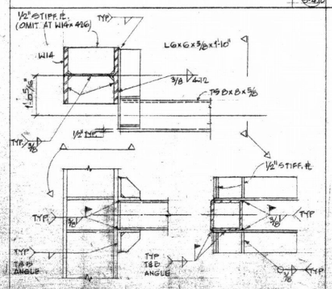

DETAIL

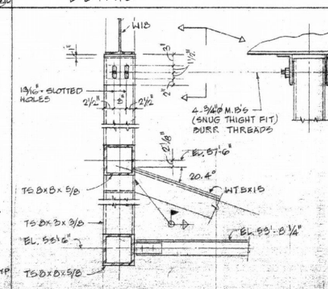

DETAIL

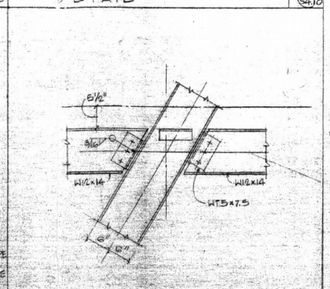

DETAIL

PIONEER PLACE

A Mixed-Use Development For
Portland Oregon

Developer

Rouse-Portland, Inc.

An Affiliate of
The Rouse Company
10275 Little Patuxent Parkway
Columbia, Maryland 21044
301-992-6000

Architects

ELS/Elbasani & Logan Architects
2040 Addison Street
Berkeley, California 94704
415-549-2929

Consultants

Civil
David Evans and Associates, Inc.
2626 S. W. Corbett Avenue
Portland, Oregon 97201
503-223-6663

Structural
Omm Structural Design
333 Bryant Street
San Francisco, California 94107
415-882-9440

Fire Protection
C.W. Timmer Associates Inc.
10700 S.W. Beaverton Highway
Beaverton, Oregon 97005
503-643-6761

Revisions	
6-15-89	A
12-15-88	B

REGISTERED PROFESSIONAL ENGINEER 12,391 OREGON DENNIS DY

CONSTRUCTION DOCUMENTS

Sheet Title

Miscellaneous Steel Details

Date 15 AUG 88 | Drawing No. S4.10

Scale 1/4" = 1'-0" 1/8"

1

August 09, 2010

EVAPCO® SUBMITTAL PACKAGE

PROJECT	PIONEER PLACE	UNIT	(1) AT-212-624 COOLING TOWER
CUSTOMER	MCKINSTRY	P.O.	
EVAPCO SERIAL NO.	10-394714	ENGINEER	SCHNACKEL ENGINEERS

SUBMITTAL DATA ENCLOSED

DESCRIPTION	DOCUMENT NUMBER
PERFORMANCE AND MECHANICAL SPECIFICATIONS	AT12ST-ST
UNIT CERTIFIED DRAWING	T3122448-DRB-015
STEEL SUPPORT CONFIGURATION	SL5AA1224DB
MOTOR DAVIT DRAWING	MDAITTVW-DA
LADDER	LDT2MT24DB
HEATER LOCATION	HLT3MTYBDB
ACCESSORY DRAWING	BPLT21224EA
VIBRATION SWITCH (SINGLE SPEED)	V1AU0000-EE
3Ø HEATER WIRING DIAGRAM	B4AU0000-ED
CERTIFICATE OF COMPLIANCE	IBCIDCOC001.pdf
GUARANTEE OF THERMAL PERFORMANCE	AOS2636

10-177932 FA

EVAPCO...TAKING QUALITY AND SERVICE TO A HIGHER LEVEL!

Date 8/6/2010

PERFORMANCE AND MECHANICAL SPECIFICATIONS

EVAPCO® AT COOLING TOWERS

PROJECT	Pioneer Place		
CUSTOMER	McKinstry		
ENGINEER	Schnackel Engineers		
UNIT:	(1) AT-212-624 Cooling Tower		
CUSTOMER P.O.		EVAPCO SERIAL NO.	10-394714
CAPACITY	3070 GPM	90 °F IN 80.3 °F OUT	69 °F E.W.B.
FAN MOTOR:	(2) 25 (Inverter Duty) HP	ELEC. SPEC.	460/3/60
INLET PRESSURE:	3.7 PSIG	DRIVES SIZED FOR 0" ESP.	

UNIT TYPE	Factory assembled, induced draft, counterflow cooling tower.
CONSTRUCTION	All cold water basin components including vertical supports and air inlet louver frames are constructed of type 304 Stainless Steel. Casing, channels and angle supports are constructed of heavy gauge mill hot-dip galvanized steel. All galvanized steel is coated with a minimum of 2.35 ounces of zinc per square foot of area (G-235 designation). During fabrication, all galvanized steel panel edges are coated with a 95% pure zinc-rich compound.
IBC COMPLIANCE	The unit structure has been designed, analyzed, and constructed in accordance with the latest edition of International Building Code (IBC) Regulations for seismic loads up to 5.12g and wind loads up to 145psf.
MAKE UP FLOAT VALVE ASSEMBLY*	Brass float valve with adjustable plastic float.
PAN STRAINER*	All type 304 stainless steel construction with large area removable perforated screens.
ACCESS	Hinge mounted door in the upper casing for fan drive and water distribution system access. Removable louver panels on all four sides of the unit for pan and sump access.
FAN SHAFT	Solid shaft of ground and polished steel. Exposed surface coated with rust preventative.
FAN SHAFT BEARINGS	Heavy-duty, self-aligning ball type bearings with extended lubrication lines to grease fittings located on access door frame. Bearings are designed for a minimum L-10 life of 75,000 hours.

FANS	Fans are axial propeller type constructed of aluminum alloy and statically balanced. The fan is installed in a closely fitted cowl with venturi air inlet. Fan screens are galvanized steel and have steel frames bolted to the fan cowl.
FAN MOTOR	Totally enclosed, ball bearing type electric motor(s) suitable for moist air service. Motor(s) are 1.15 service factor design.
FAN DRIVE	The fan drive is a multi-groove, solid back, reinforced neoprene V-belt type with taper lock sheaves designed for 150% of the motor nameplate horsepower. Fan and motor sheaves are constructed of aluminum alloy.
FILL	Polyvinyl Chloride (PVC) of cross-fluted design. PVC sheets are bonded together for strength and durability. Fill is self-extinguishing for fire resistance, has a flame spread of 5 under A.S.T.M. designation E-84-81a, and is resistant to rot, decay and biological attack.
WATER DISTRIBUTION SYSTEM	Precision molded ABS, large orifice spray nozzles utilizing fluidic technology for superior water distribution over the fill media and to minimize water distribution system maintenance. Spray header and branches are Schedule 40 Polyvinyl Chloride (PVC) for corrosion resistance with steel connection to attach external piping. Branches have threaded end caps to facilitate debris removal.
ELIMINATORS	The eliminators are constructed entirely of Polyvinyl Chloride (PVC) in easily handled sections. Design incorporates three changes in air direction and limits the water carryover to a maximum of 0.001% of the circulating water rate.
AIR INLET LOUVERS	The air inlet louvers are constructed from UV inhibited polyvinyl chloride (PVC) and incorporate a framed interlocking design that allows for easy removal of louvers for access to the entire basin area for maintenance. The louvers have a minimum of two changes in air direction and are of a non-planar design to prevent splash-out, block direct sunlight and debris from entering the basin. (Patent Pending)

*OMITTED ON UNITS FOR REMOTE SUMP OPERATION

SPECIAL REMARKS:

- **Unit(s) to be supplied with Inverter Duty fan motor(s).**
- **(1) 10 in BFW Grooved equalizer connection(s).**
- **3 ft Fan cylinder extension.**
- **(4) 6 KW Pan Heater(s), 460/3/60, with thermostat and low water cutoff(s).**
- **Heater package includes contactor, 460/3/60, with transformer and disconnect in a NEMA 4 enclosure (wiring by others).**
- **Unit(s) provided with ladder(s).**
- **Motor Davit and Base.**
- **Unit provided with Vibration Cutout Switch(es), mounted (wiring and sensitivity adjustment by others).**
- **Unit(s) supplied with a basin level platform.**
- **IBC Compliant up to 5.12g.**
- **Louver Access Door.**

Extension on top of tower to be removed.
(top 4' of cooling tower)

EVAPCO, INC.

UNIT	MODEL #	SCALE	DWG. #	REV.	DATE	SERIAL #
COOLING TOWER	AT-212-624	N.T.S.	T3122448-DRB-015		8/6/10	10-394714

NOTES:
1. (M)- FAN MOTOR LOCATION
2. HEAVIEST SECTION IS UPPER SECTION
3. MPT DENOTES MALE PIPE THREAD
   FPT DENOTES FEMALE PIPE THREAD
   BFW DENOTES BEVELED FOR WELDING
4. +UNIT WEIGHT DOES NOT INCLUDE
   ACCESSORIES (SEE ACCESSORY DRAWINGS)
5. MAKE-UP WATER PRESSURE
   20 psi MIN [137 kPa], 50 psi MAX [344 kPa]
6. FAN CYLINDER EXT. SUPPORTED BY EVAPCO

FACE 2
PLAN VIEW

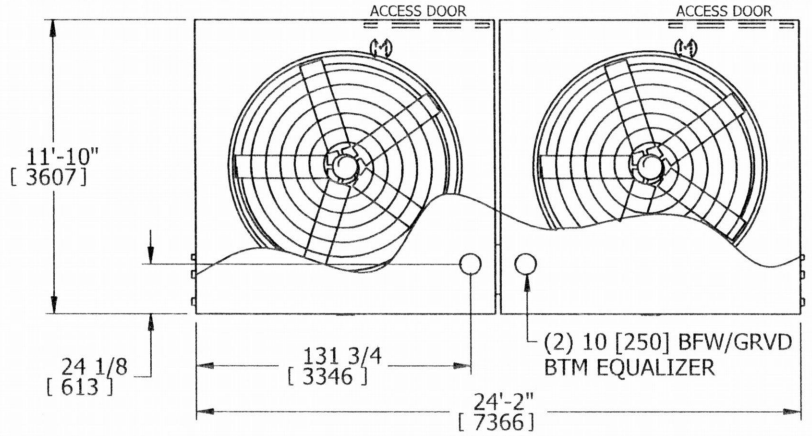

FACE 1

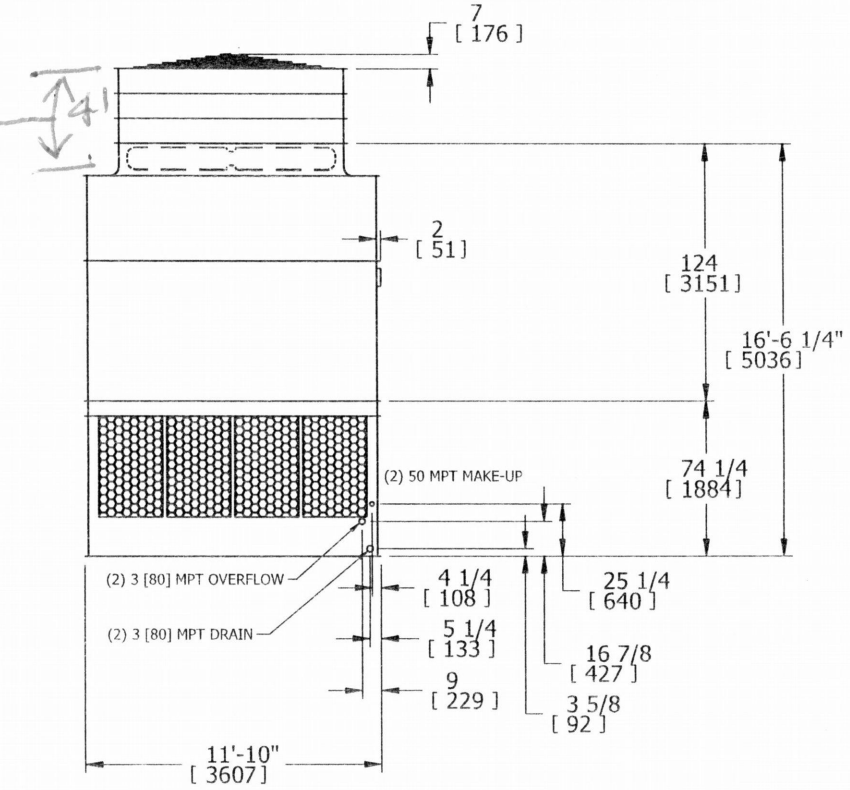

FACE 2

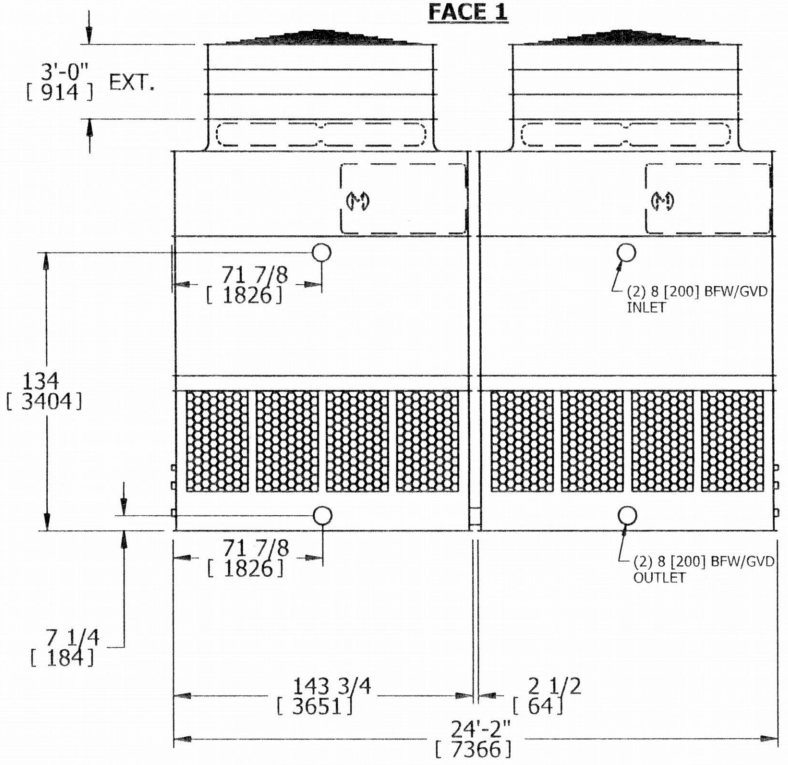

FACE 1

SHIPPING WEIGHT	OPERATING WEIGHT	HEAVIEST SECTION WEIGHT	NO. OF SHIPPING SECTIONS
1895 lbs+ [860] kg+	30335 lbs+ [13760] kg+	6595 lbs+ [2991] kg+	4

EVAPCO, INC.

TITLE	STEEL SUPPORT CONFIGURATION	UNIT:	12x24 INDUCED DRAFT UNITS	DWG. #	SL5AA1224-DB

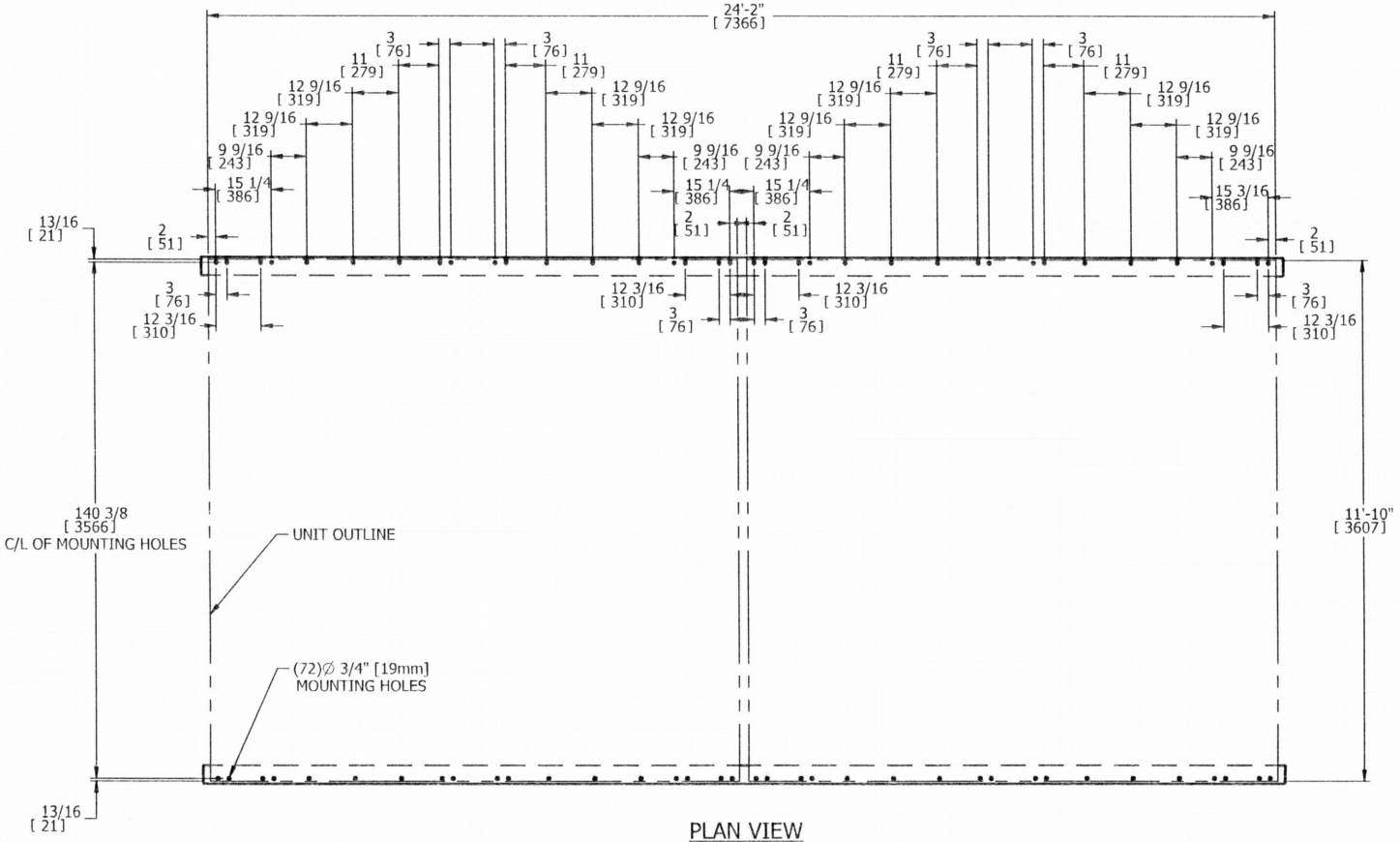

PLAN VIEW

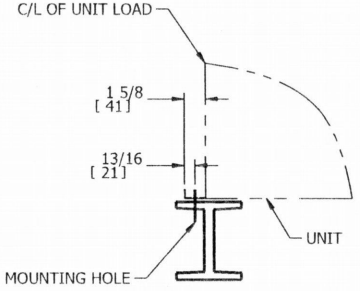

TYPICAL END VIEW

NOTES:

1. BEAMS SHOULD BE SIZED IN ACCORDANCE WITH ACCEPTED STRUCTURAL PRACTICES. MAXIMUM DEFLECTION OF BEAM UNDER UNIT TO BE 1/360 OF UNIT LENGTH NOT TO EXCEED 1/2" [13mm].
2. DEFLECTION MAY BE CALCULATED BY USING 55% OF THE OPERATING WEIGHT AS A UNIFORM LOAD ON EACH BEAM. SEE CERTIFIED PRINT FOR OPERATING WEIGHT.
3. SUPPORT BEAMS AND ANCHOR HARDWARE ARE TO BE FURNISHED BY OTHERS. ANCHOR HARDWARE TO BE ASTM - A490 5/8" [16mm] BOLT OR EQUIVALENT.
4. BEAMS MUST BE LOCATED UNDER THE FULL LENGTH OF THE PAN SECTION.
5. SUPPORTING BEAM SURFACE MUST BE LEVEL. DO NOT LEVEL THE UNIT BY PLACING SHIMS BETWEEN THE UNIT MOUNTING FLANGE AND THE SUPPORTING BEAM.
6. ANCHORING ARRANGEMENT SHOWN HAS A MAXIMUM WIND RATING OF 145 PSF [6.94 KPa] ON CASED VERTICAL SURFACES.
7. THE FACTORY RECOMMENDED STEEL SUPPORT CONFIGURATION IS SHOWN. CONSULT THE FACTORY FOR ALTERNATE SUPPORT CONFIGURATIONS.
8. UNIT SHOULD BE POSITIONED ON STEEL SUCH THAT THE ANCHORING HARDWARE FULLY PENETRATES THE BEAM'S FLANGE AND CLEARS THE BEAM'S WEB.
9. ALL 12 X 24 MODELS ARE MULTIPLE CELL UNITS. OPERATING WEIGHT OF EACH CELL IS FOUND BY DIVIDING TOTAL OPERATING WEIGHT BY THE NUMBER OF CELLS.
10. WHEN VIBRATION ISOLATION IS REQUIRED FOR MULTIPLE CELL UNITS, THE VIBRATION ISOLATORS (BY OTHERS) MUST BE LOCATED UNDER THE SUPPORTING STEEL BEAMS AND NOT BETWEEN THE SUPPORTING STEEL BEAMS AND THE UNIT.

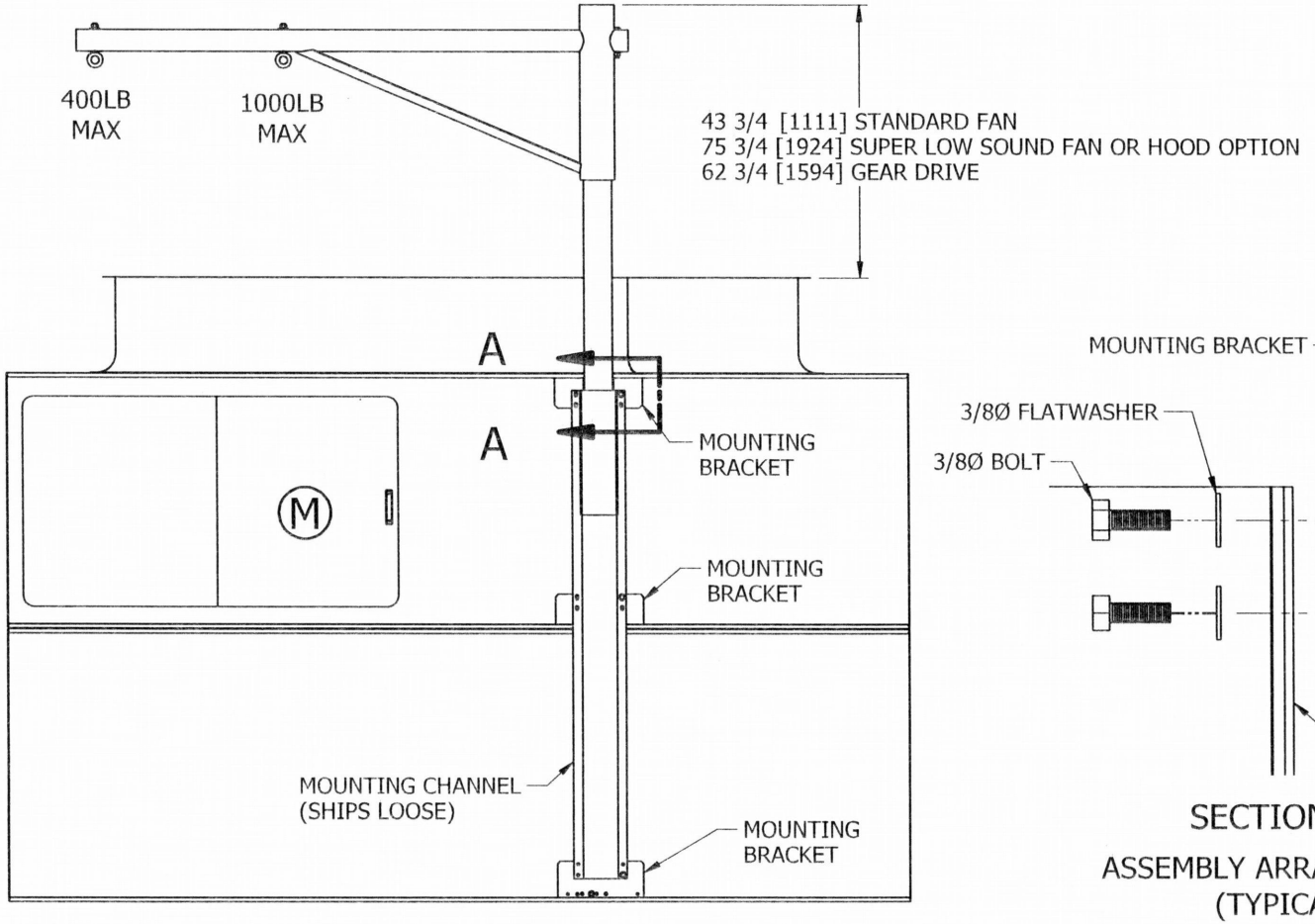

12 X 12/14/18/20 AT2, ATC/W-B, ESWA, REP

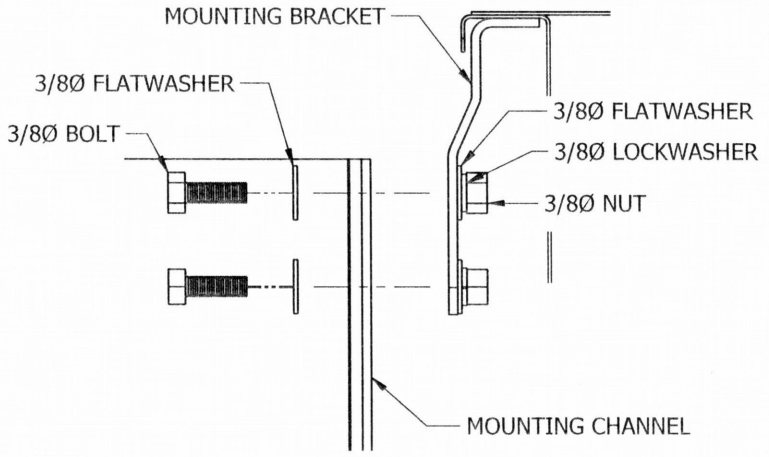

SECTION A-A

ASSEMBLY ARRANGEMENT
(TYPICAL)

NOTES:

A. (M)= MOTOR

B. DAVIT IS DESIGNED FOR RAISING OR LOWERING EVAPCO FAN MOTORS OR FANS AND GEARS AS UNIT IS EQUIPPED. DO NOT USE FOR ANY OTHER PURPOSE.

C. DAVIT IS DESIGNED TO PIVOT FREELY AND CAN BE REMOVED FROM ITS MOUNTING BASE FOR STORAGE.

D. DIMENSIONS LISTED AS FOLLOWS: ENGLISH [METRIC]
IN [mm]

evapco

REMOVABLE DAVIT

MDAITTVW-DA

EVAPCO, INC.

TITLE	UNIT:	DWG. #
SLOPED LADDER INSTALLATION PACKAGE		LDT2MT24DB

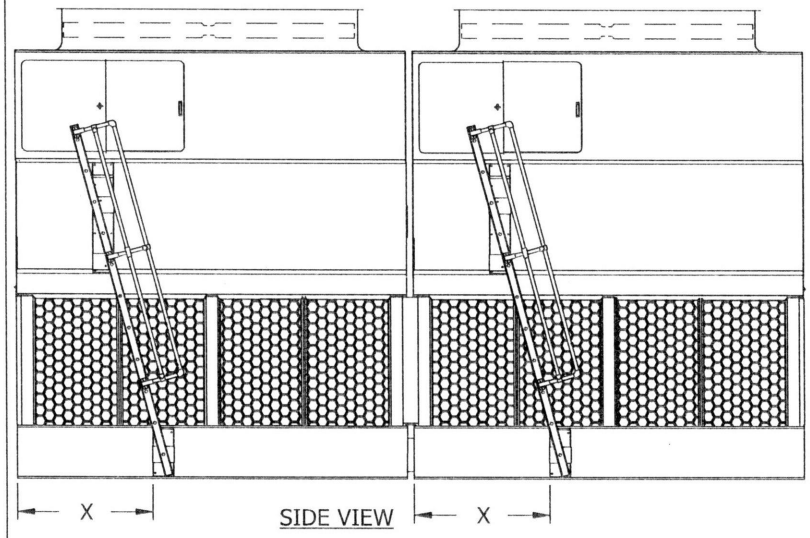

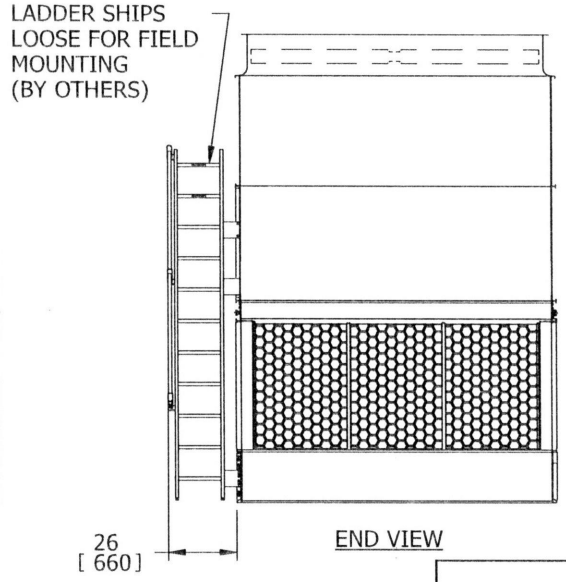

NOTE:
1. REFER TO RIGGING PACK FOR LADDER AND PLATFORM MOUNTING INSTRUCTIONS.

* THE BOTTOM OF THE LADDER IS AT THE BASE OF THE UNIT. IF THE UNIT IS ELEVATED THEN A LADDER EXTENSION SHOULD BE CONSIDERED. (CONSULT FACTORY). LADDER EXTENSIONS OF UP TO 3 FEET CAN BE ADDED WITHOUT ANY ADDITIONAL SUPPORT. FOR A LADDER EXTENSION LONGER THAN 3 FEET ADDITIONAL SUPPORT MUST BE PROVIDED BY OTHERS.

RIG LADDER BEFORE PIPING UNIT

MODEL #	DIM. X	
	IN.	MM
AT/USS 212-024, 224, 424	49 7/8	1267
AT/USS 212-124, 324, 524, 724	53	1346
AT/USS 212-624, 824, 924	56 1/4	1429
AT/USS 210-224, 424	49 7/8	1267
AT/USS 210-124, 324, 524, 724	53	1346
AT/USS 210-624, 824, 924	56 1/4	1429

CUSTOMER INSTALLATION NOTES:

a. REMOVE LADDER BRACKET MOUNTING BOLTS (1) FROM LADDER MOUNTING CHANNELS (2) ON PAN AND CASING SECTIONS.
b. LOOSEN, BUT DO NOT REMOVE, LADDER BRACKET AND ASSY. BOLTS (3).
c. TO ASSEMBLE, SLIDE LADDER BRACKET ASSY. (4) OVER LADDER MOUNTING CHANNELS (2) LOCATED ON PAN AND CASING (DO NOT REMOVE LADDER BRACKET ASSY. (4) FROM LADDER.)
d. ALIGN HOLES AND REINSTALL LADDER BRACKET MOUNTING BOLTS (1) THROUGH LADDER BRACKET ASSY. (4) AND LADDER MOUNTING CHANNELS (2).
e. TIGHTEN ALL BOLTS.
f. TIGHTEN ADJUSTING SCREW (5) IN THE ADJUSTABLE MOUNTING BRACKETS WHEN APPLICABLE.

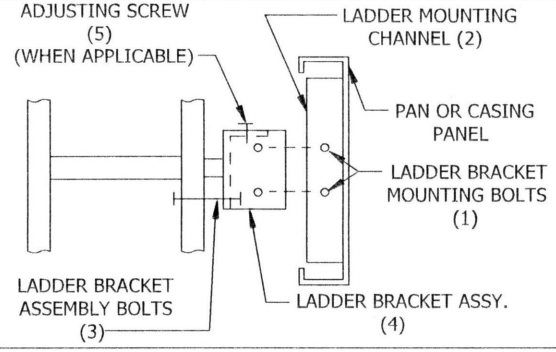

EVAPCO, INC.

TITLE HEATER LOCATION	UNIT: 3M,12x24/28/36(2C)/40 INDUCED DRAFT TOWER	DWG. # HLT3MTYB-DB

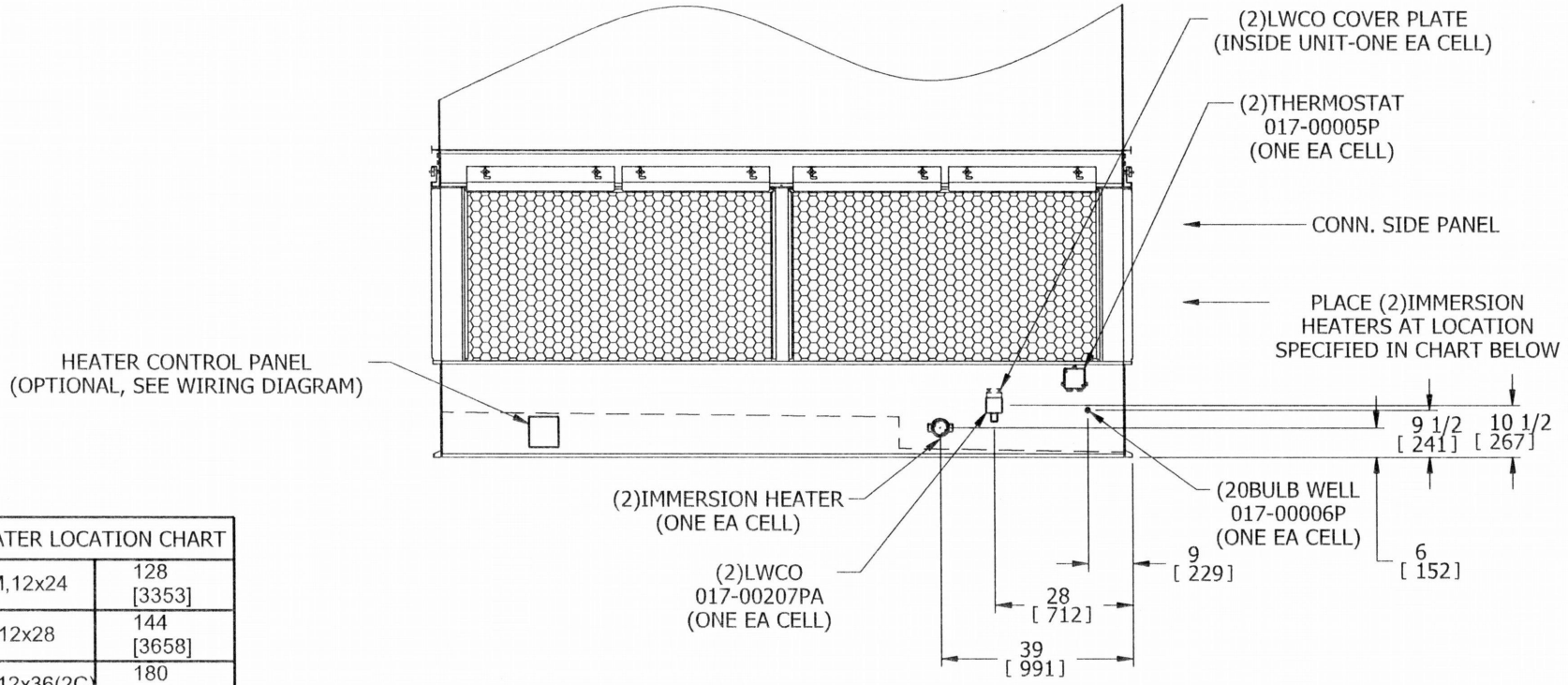

END VIEW

HEATER LOCATION CHART	
3M,12x24	128 [3353]
12x28	144 [3658]
3M,12x36(2C)	180 [4572]
12x40	204 [5182]

* PLACE HEATER IN SPECIFIED LOCATIONSFROM EACH END TOWARD MIDDLE OF UNIT AND 6 [152] UP FROM BOTTOM OF UNIT.

NOTES:

1. A MINIMUM OF **15.00 in** CLEARANCE IS REQUIRED BETWEEN THE HEATER OUTLET BOX AND THE NEAREST OBSTRUCTION FOR REMOVAL OF THE HEATER.
2. ALL NIPPLES ON UNIT ARE NOT SHOWN IN ORDER TO CLARIFY HEATER COMPONENT LOCATIONS.
3. ALL HEATER COMPONENTS BY EVAPCO ARE FACTORY MOUNTED WHEN POSSIBLE.
4. DIMENSIONS LISTED AS FOLLOWS: ENGLISH IN [METRIC] [mm]

evapco

BASIN LEVEL PLATFORM

DWG. # BPLT21224EA

NOTES:
1. LADDER AND PLATFORM SHIP LOOSE FOR FIELD INSTALLATION BY OTHERS.
2. PLATFORM IS STRUCTURALLY SUPPORTED TO UNIT. THE VERTICAL LADDER IS TIED TO PLATFORM BUT WILL NEED SUPPORT AT BOTTOM AFTER RIG.
3. PLATFORM ACCESS IS FOR GENERAL MAINTENANCE TO FLOAT ARM ASSY AND STRAINER ASSY.
4. EACH PLATFORM AND LADDER ASSY. WEIGHS 350 LBS.

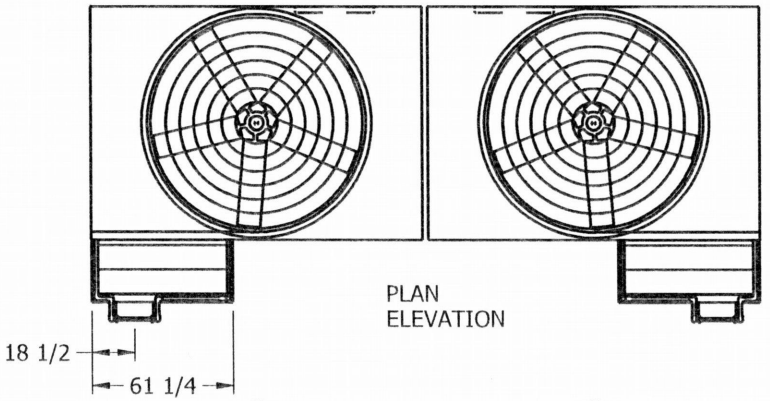

PLAN
ELEVATION

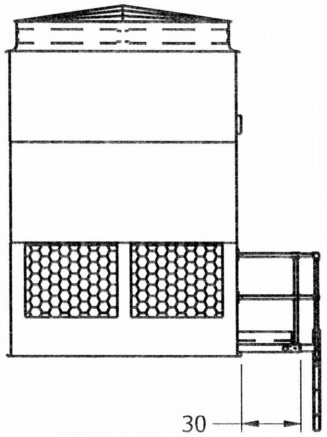

END
ELEVATION

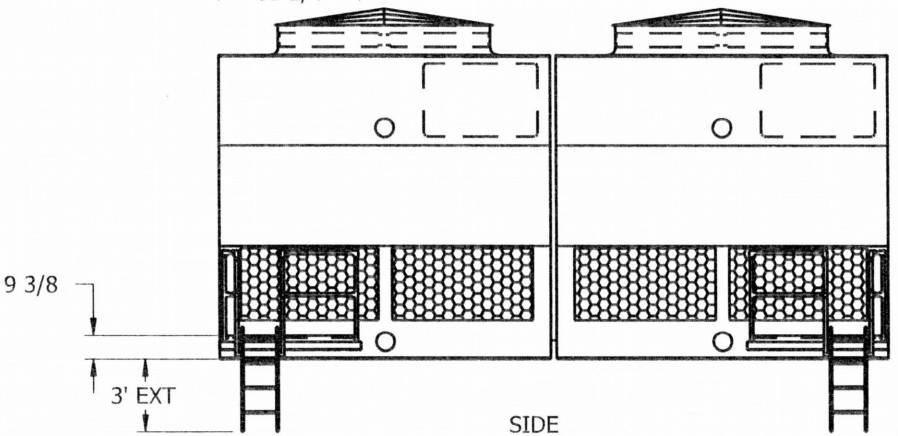

SIDE
ELEVATION

EVAPCO, INC.

TITLE	DESCRIPTION:	DWG. #
VIBRATION SWITCH	SINGLE SPEED	V1AU0000-EE

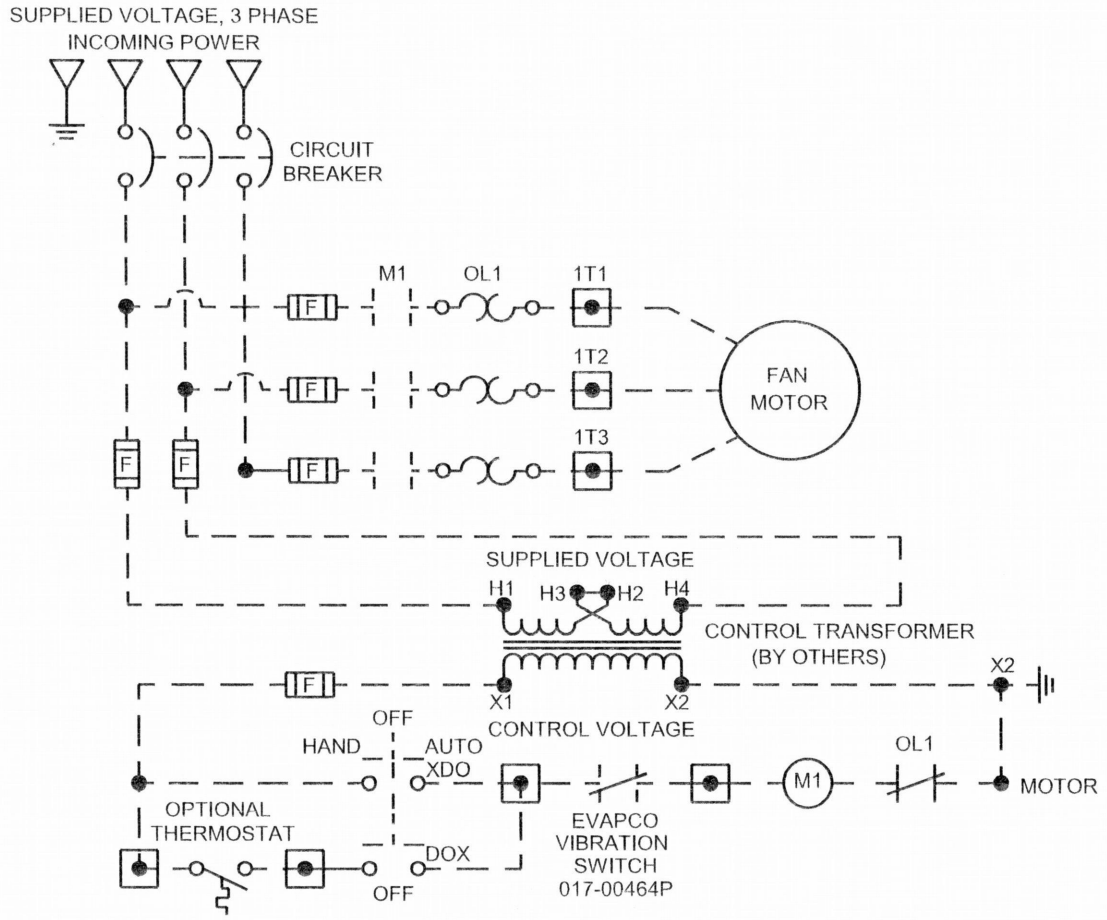

SWITCH CONTACT RATING:

15 AMPS, 125, OR 480 Vac; 1/8 HP, 125 Vac; 1/4 HP, 250 Vac; 1/2 AMP, 125 Vdc; 1/4 AMP, 250 Vdc.

WIRING DIAGRAM:

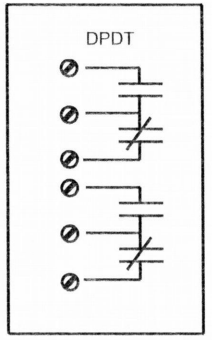

NOTES:

1. DASHED LINES INDICATE WIRING(BY OTHERS)

ADJUSTMENT

ADJUST THE SWITCH SO THAT DURING FULL SPEED START-UP AND UNDER NORMAL CONDITIONS, THE CONTACTS DO NOT TRIP. FIRST, WITH THE MOTOR OFF, TURN THE ADJUSTMENT SCREW COUNTER-CLOCKWISE (MORE SENSITIVE DIRECTION) UNTIL THE SWITCH TRIPS. NEXT, TURN THE ADJUSTMENT SCREW CLOCKWISE 1/8 TURN (LESS SENSITIVE DIRECTION). RESET THE SWITCH BY DEPRESSING THE PUSH-BUTTON RESET LOCATED ON TOP OF THE SWITCH. START THE MOTOR ON FULL SPEED. IF THE MOTOR TRIPS THE SWITCH, THEN TURN THE ADJUSTMENT SCREW CLOCKWISE AN ADDITIONAL 1/8 TURN. RESET THE SWITCH AND START THE MOTOR AGAIN. REPEAT THE ABOVE PROCEDURE UNTIL THE MOTOR CONTINUES TO RUN.

RECOMMENDED POWER AND CONTROL WIRING

- ALL HEATERS AND CONTROLS NOT PROVIDED BY EVAPCO TO BE INSTALLED AND WIRED BY OTHERS
- ALL POWER WIRING BY OTHERS
- ALL FIELD WIRING BY OTHERS

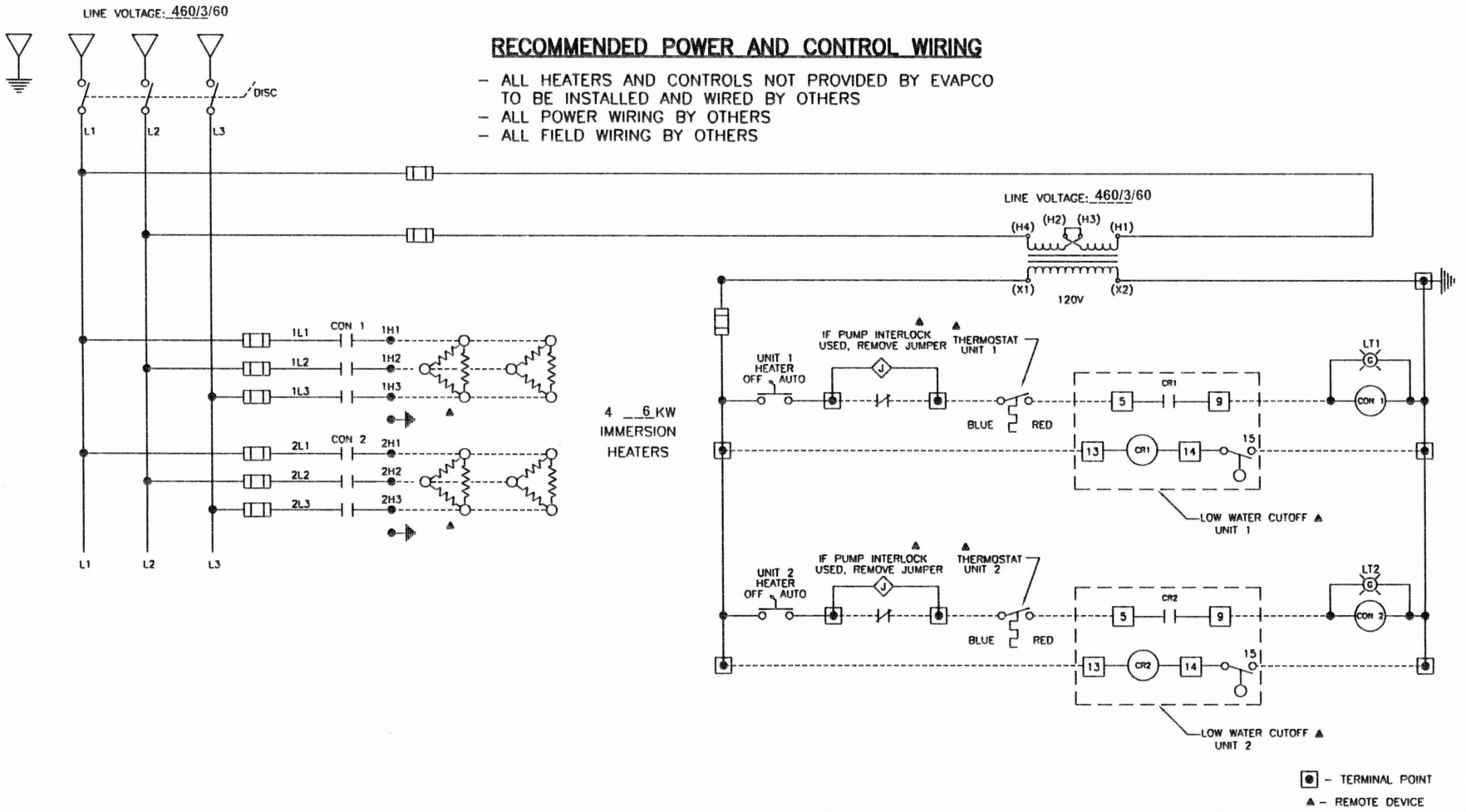

NOTES:

1. DASHED LINES INDICATE FIELD WIRING.
2. THE HEATERS HAVE BEEN SIZED TO MAINTAIN 40°F PAN WATER AT AN AMBIENT TEMPERATURE OF 0 °F.
3. ALL COMPONENTS BY EVAPCO HAVE NEMA 4 ENCLOSURES.
4. AUXILIARY N.C. CONTACT INTERLOCKS IMMERSION HEATERS WITH SPRAY WATER CIRCULATING PUMP TO DE-ENERGIZE HEATERS WHEN SPRAY PUMP IS RUNNING.
5. (1) CONTACTOR IS SUPPLIED FOR EVERY (2) HEATERS
   - CONTACTOR SHOULD BE WIRED WITH SEPARATE SUPPLY TERMINALS FOR EACH HEATER.
6. (1) CONTACTOR IS SUPPLIED PER CELL OF A MULTICELL UNIT
   - PROVIDES FOR INDIVIDUAL CELL OPERATION

IMMERSION HEATER BY:	☑ EVAPCO	☐ OTHERS
LOW WATER CUTOFF/THERMOSTAT CONTROL BY:	☑ EVAPCO	☐ OTHERS
AUXILIARY N.C. PUMP INTERLOCK BY:	☐ EVAPCO	☑ OTHERS
HEATER CONTROL PANEL BY:	☑ EVAPCO	☐ OTHERS
TRANSFORMER BY:	☑ EVAPCO	☐ OTHERS
HEATER CONTACTOR BY:	☑ EVAPCO	☐ OTHERS
FUSED DISCONNECT BY:	☑ EVAPCO	☐ OTHERS

evapco

3Ø HEATER
WIRING DIAGRAM
4 HEATERS

B4AU0000-ED

Certificate of Compliance

AT, USS, UAT, UT Cooling Towers
ATW(B) and ESWA Closed Circuit Coolers
ATC-E Evaporative Condensers

Are certified to meet or exceed the Seismic and Wind Load Provisions set forth in the applicable building codes for this project.

These products have been manufactured following all applicable quality assurance programs.

Applicable Building Codes:
IBC 2006
ASCE-7
NFPA 5000

Referenced Report:
VMA-43387

Approval Agency:
VMC Seismic Consulting Group

THE VMC GROUP
The Power of Together

EVAPCO...Specialists in Heat Transfer Products and Services.

ID IBC COC 001

Guarantee of Thermal Performance

EVAPCO® unequivocally guarantees the thermal performance of its equipment as shown on the certified drawings, when the equipment is installed in accordance with good engineering practice. If after installation and start-up there is any question regarding thermal performance of the equipment, at the owner's request EVAPCO will send its engineers to the jobsite to conduct a performance test. This test may be observed by the owner and the consulting engineer or by their authorized representatives. If the results of the evaluation show the equipment to be deficient, EVAPCO will make the necessary repairs or alterations to correct the deficiency at no cost to the owner. If the equipment is found to be performing in accordance with its certified drawing, the owner is expected to reimburse the company for its costs associated with this performance test.

EVAPCO...Specialists in Heat Transfer Products and Services.

AOS2636

R-4

MASON INDUSTRIES, Inc.
Manufacturers of Vibration Control Products
350 Rabro Drive, Hauppauge, NY 11788, 631/348-0282, FAX 631/348-0279
2101 W. Crescent, Ste. D, Anaheim, CA 92801, 714/535-2727, FAX 714/535-5738

SEISMIC OVERTURNING CALCULATIONS

JOB NAME: PIONEER PLACE
CUSTOMER: MASON OREGON
EO NUMBER: 25826

8/31/2010

Tag:	CT-1
Wp=	32835
ap=	2.50
Rp=	2.00
Sds=	0.73
Ip=	1.00
z=	1.00
h=	1.00
$Fph_{(calc.)}$ =	35954
$Fph_{(min.)}$ =	7191
$Fph_{(max.)}$ =	38351
Fph(a)=	25682
Fpv(a)=	3424
Seismic Force Ratio=	0.78
b1=	266
b2=	114
h=	70
N=	8
Mason Type Isolator=	SLRS0-4
H(Mount height)=	8 3/4
A(Edge distance)=	7/8
Bw(Anchor spacing)=	6 1/4
Bl(Anchor spacing)=	11
n=	4
A325 Bolt Diameter=	3/4
Ab =	0.442
At=	0.334
Ak=	0.323
Ixx=	78618
Iyy=	25992
Tan(theta)=	0.77
theta(rad)=	0.66
theta(deg)=	37.65
Pt=	-1713
Pc=	9101
Ps=	3210
Tbolt=	2370
Vbolt=	803
ft=	7096.38
fv=	2484.68
T allow =	19890
V allow =	10608
Fnt =	90000
Fnv =	48000
F'nt =	90000
Tcheck=	0.12
Vcheck=	0.08

REGISTERED PROFESSIONAL ENGINEER 14,828 OREGON MAR. 27, 1990 GUMMADI DHARMA REDDY

EXPIRES: 12/31/10

A325 Grade Anchor Bolts
*Manual of American Institute of Steel Construction, Allowable Stress Design, 13th Edition

R-5

MASON INDUSTRIES, Inc.
Manufacturers of Vibration Control Products
350 Rabro Drive
Hauppauge, NY 11788
631/348-0282
FAX 631/348-0279
Info@Mason-Ind.com

2101 W. Crescent Ave., Suite D
Anaheim, CA 92801
714/535-2727
FAX 714/535-5738
Info@MasonAnaheim.com

www.Mason-Ind.com

JOB NAME PIONEER PLACE
CUSTOMER MASON OREGON
CUSTOMER P.O. 1650
MASON M.I. EO 25826
DWG. NO. WF-25826-A

SLRSO

1" DEFLECTION 4, 6, & 9 SERIES SPRING MOUNTS

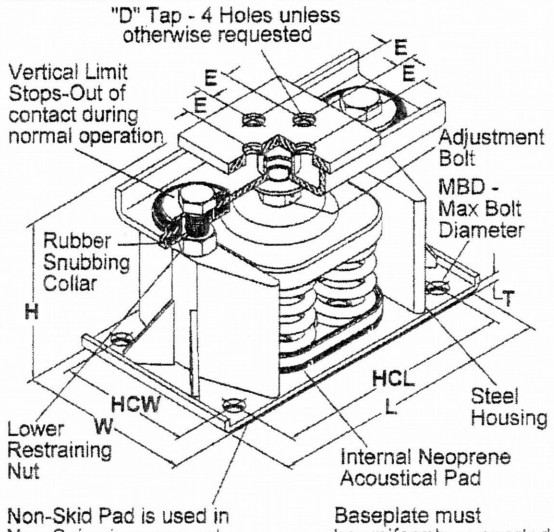

Non-Skid Pad is used in Non-Seismic zones only. Remove pad prior to installing in seismic zones. Reduce published height by 1/8" if pad is removed.

Baseplate must be uniformly supported

TYPE SLRSO RATINGS

Size	Rated Capacity (lb)	Rated Defl. (in)	Spring Constant (lb/in)	Max. Horiz. Housing G Rating	Spring Color
SLRSO-4-5400	5400	1.00	5400	2.0	Yellow
SLRSO-4-7000	7000	1.00	7000	1.6	Black*
SLRSO-4-8400	8400	1.00	8400	1.3	Yellow*
SLRSO-4-9540	9540	1.00	9540	1.2	Yellow**
SLRSO-4-10600	10600	1.00	10600	1.1	Red*
SLRSO-4-11740	11740	1.00	11740	0.9	Red**
SLRSO-6-12600	12600	1.00	12600	‡	Yellow*
SLRSO-6-14310	14310	1.00	14310	‡	Yellow**
SLRSO-6-15900	15900	1.00	15900	‡	Red*
SLRSO-6-17610	17610	1.00	17610	‡	Red**
SLRSO-9-18900	18900	1.00	18900	‡	Yellow/Red
SLRSO-9-21465	21465	1.00	21465	‡	Yellow/Grn
SLRSO-9-23850	23850	1.00	23850	‡	Red/Red

* with RED inner spring
** with GREEN inner spring
‡ SLRSO-6 & 9 are currently being tested.

TYPE SLRSO DIMENSIONS (inches)

Size	L	W	H	T	MBD	HCW	HCL	D	E
SLRSO-4	13 3/4	8	8 3/4	3/8	3/4	6 1/4	11	7/8	1 3/8
SLRSO-6	19	9	9 3/4	3/8	1	6	15 7/8	1	1 5/8
SLRSO-9	18	13	9 3/4	5/8	1	10 3/4	15 3/4	1	2

Illustration above shows a SLRSO-4 housing with four (4) C springs. Not shown are SLRSO-6 and SLRSO-9 housings which have six (6) C springs and nine (9) C springs respectively.

All springs have an additional travel to solid equal to 50% of the rated deflection.

Housing load ratings expressed in G's are based on tests with bolted connections to steel top and bottom.

SPRING DATA

Size	Spring OD	Free Height	Ratio K_x/K_y	Ratio OD/OH
C	2 7/8	4 1/8	0.90-1.10	0.92

CERTIFICATION DATA

TAG : CT-1

UNIT : EVAPCO AT 212-624

PLAN VIEW OF MOUNT LOCATION:

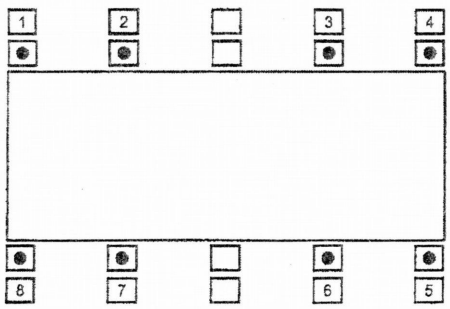

1 :SLRSO-4-7000	7 :SLRSO-4-7000
2 :SLRSO-4-7000	8 :SLRSO-4-7000
3 :SLRSO-4-7000	9 :
4 :SLRSO-4-7000	10 :
5 :SLRSO-4-7000	11 :
6 :SLRSO-4-7000	12 :
Sets Required : (1)	

FORM S-295 10/2008	DWN: LD	CHKD:	DATE: 8/31/10	DWG. No. WF-25826-A

VLMK CONSULTING ENGINEERS
3933 SW Kelly Avenue • Portland • Oregon 97239-4393

P 503.222.4453
F 503.248.9263
E vlmk@vlmk.com
W www.vlmk.com

STRUCTURAL CALCULATIONS

for

PIONEER TOWER RETAIL

COOLING TOWER

888 SW 5th Avenue, Suite 750
Portland, Oregon 97204

for

MCKINSTRY

16790 NE Mason Street
Portland, Oregon 97230

STRUCTURAL REGISTERED PROFESSIONAL ENGINEER
58785PE
OREGON
JAN. 23, 2001
KEVIN M. KAPLAN
9/3/10
EXPIRES: 6-30-2011

Prepared By: KDR

VLMK Job Number: 210309

September 2010

Calculation Sheets: S-1 thru S-16
Reference Only Sheets: R-1 thru R-5

10-177932 FA

PROJECT DESCRIPTION

An existing cooling tower unit is being replaced with a newer unit that weighs about 3000# more and has different perimeter dimensions. The following calculations consist of checking the existing platform and framing for the new loads. New platform framing and isolators are designed by others.

DESIGN CRITERIA

CODES:
2010 Oregon Structural Specialty Code (Based on the 2009 IBC)

DESIGN LOADS:

Live Loads:

Roof

Snow Load	25	psf
Mechanical Zone	50	psf

Dead Loads:

Roof (Composite Slab on Metal Deck)

Concrete Slab (5 ½" Total Depth)	48.3	psf
3" Metal Deck	2.2	psf
Mechanical and Electrical	2.0	psf
Ceiling	3.0	psf
Miscellaneous	4.5	psf
Roof Gravel/Pavers	20.0	psf
Total Floor Load	80.0	psf

Additional Loads

New Cooler Unit	30,335	lb
New Cooler Unit + Steel Curb/Accessories	32,835	lb

VLMK CONSULTING ENGINEERS
3933 SW Kelly Avenue • Portland • Oregon 97239-4393
P 503.222.4453 503.248.9263 F

Job: Pioneer Cooling Tower
Client: McKinstry
Job No. 210309 By KOR
Date 09/10 Sheet No. S-2

(E) PLATFORM CHECK:

LOADS: [FROM MASON INDUSTRIES ANALYSIS]

DEAD:

$P_{TOTAL} = 32935\#$

$P_{ISO} = 32935\# \ (1/8) = 4.105\ K/_{ISOLATOR}$

SNOW:

$P_{ISO} = 25\ PSF \ \frac{(290")(143")}{144} \ (1/8) = 0.9\ K/_{ISOLATOR}$

SEISMIC:

$F_P = 25{,}682\#$

$M_{OT} = 25{,}682\# \ (70"/12) = 149.8\ K'$

$T_z = C_z = \frac{149.8\ K'}{(114"/12)} \ (1/4) = 3.95\ K/_{ISOLATOR}$

$T_x = C_x = \frac{149.8\ K'}{(266"/12)} \ (1/2) = 3.38\ K/_{ISOLATOR}$

$V = 25{,}682\# \ (1/8) = 3.21\ K/_{ISOLATOR}$

[SEE RISA DESIGN]

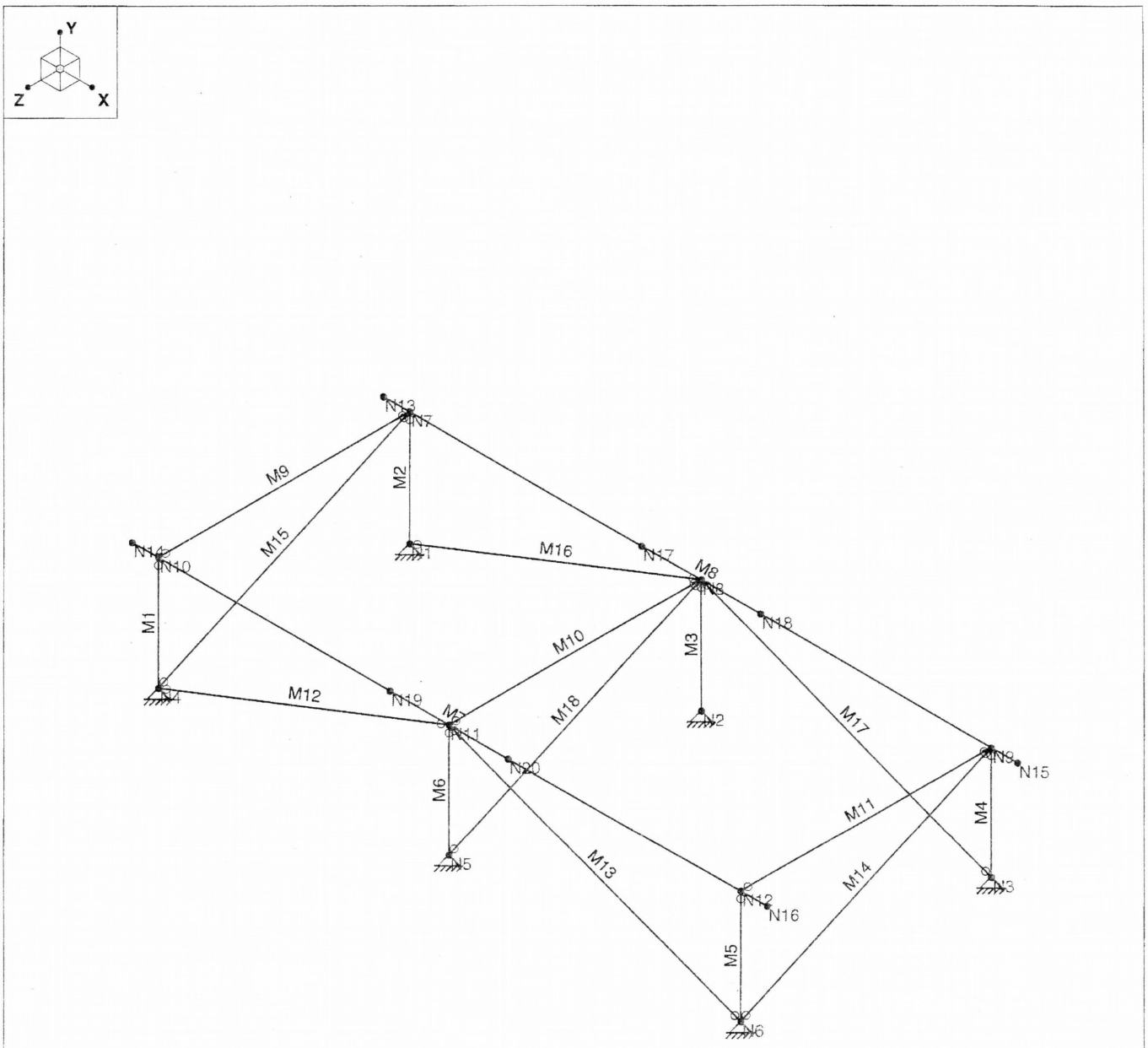

Results for LC 1, ASCE 1

VLMK		
KDR	Pioneer Cooling Tower Frame	Sept 2, 2010 at 10:17 AM
210309		Platform.r3d

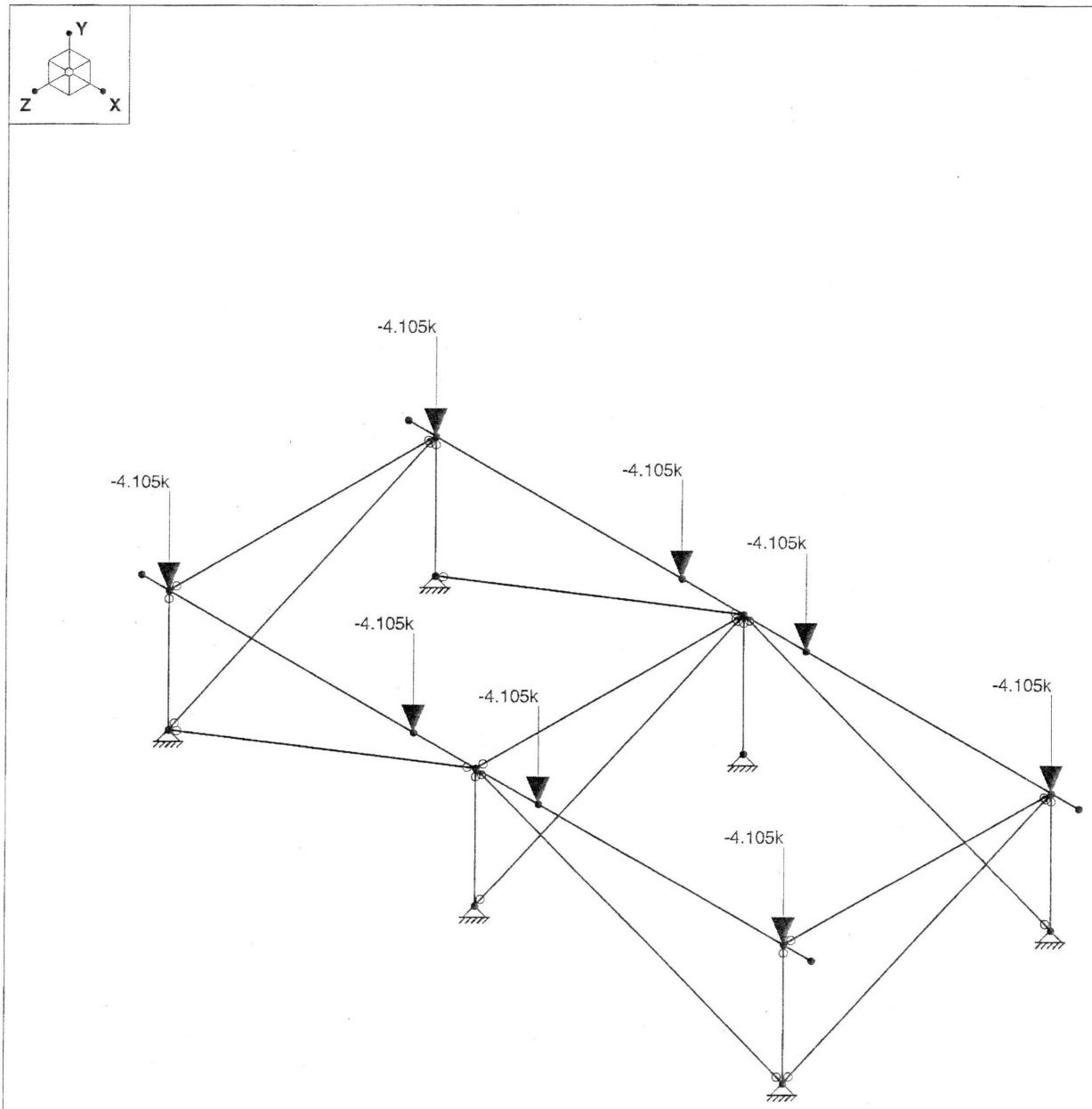

Loads: BLC 1, Dead
Results for LC 1, ASCE 1

VLMK	Pioneer Cooling Tower Frame	
KDR		Sept 2, 2010 at 10:17 AM
210309		Platform.r3d

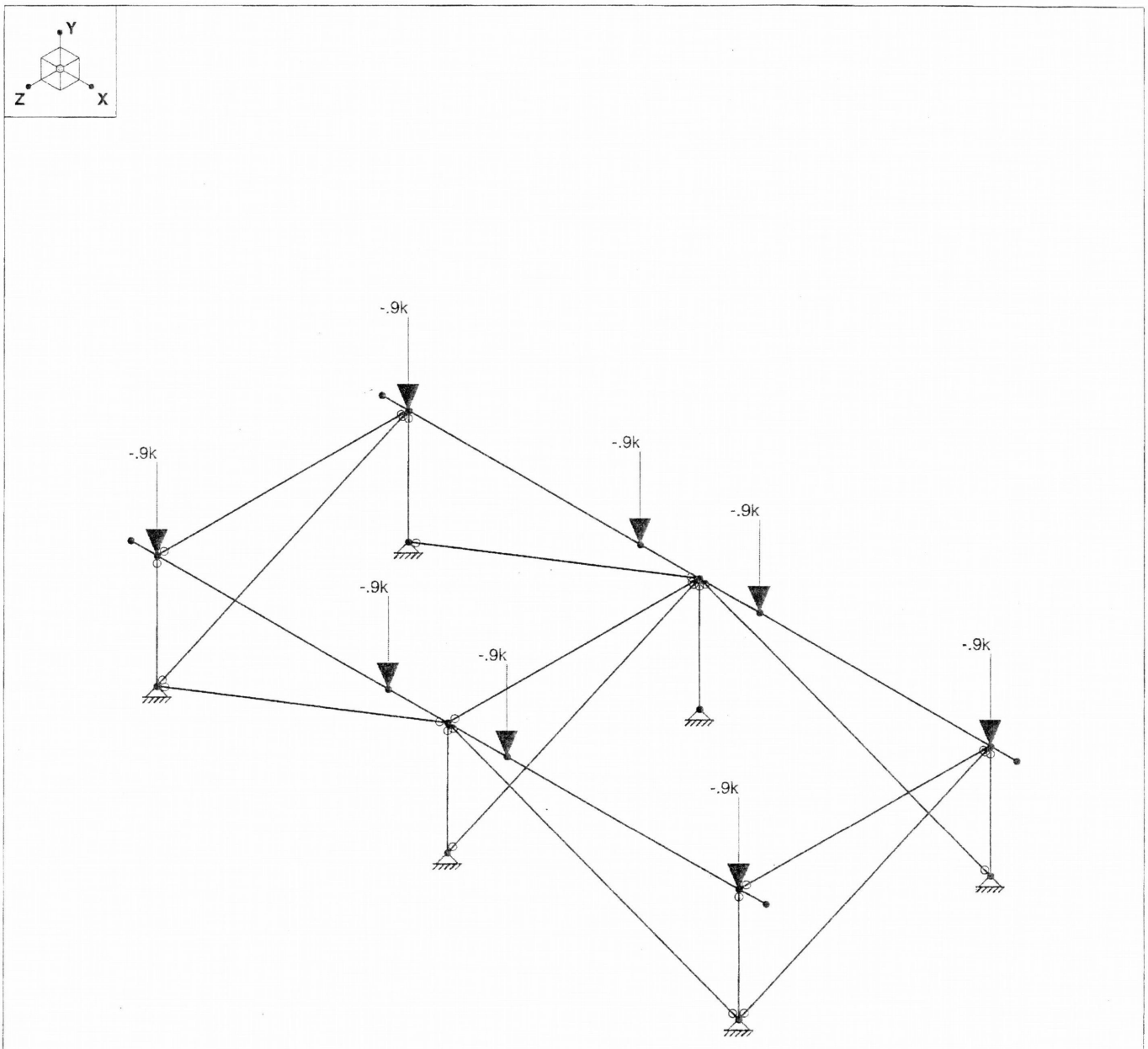

Loads: BLC 2, Snow
Results for LC 1, ASCE 1

VLMK		
KDR	Pioneer Cooling Tower Frame	Sept 2, 2010 at 10:17 AM
210309		Platform.r3d

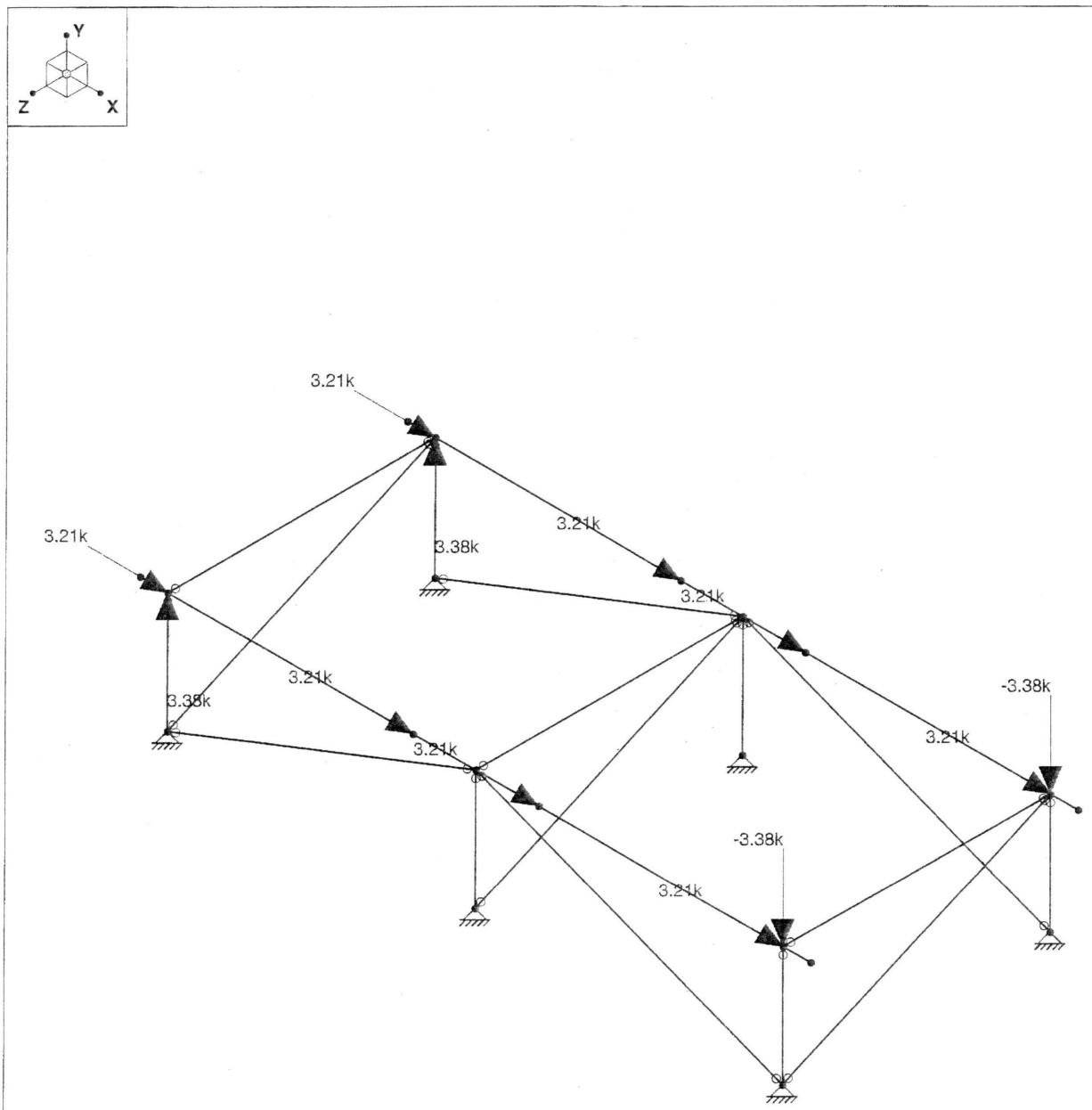

Loads: BLC 3, SeismicX
Results for LC 1, ASCE 1

VLMK	Pioneer Cooling Tower Frame	
KDR		Sept 2, 2010 at 10:18 AM
210309		Platform.r3d

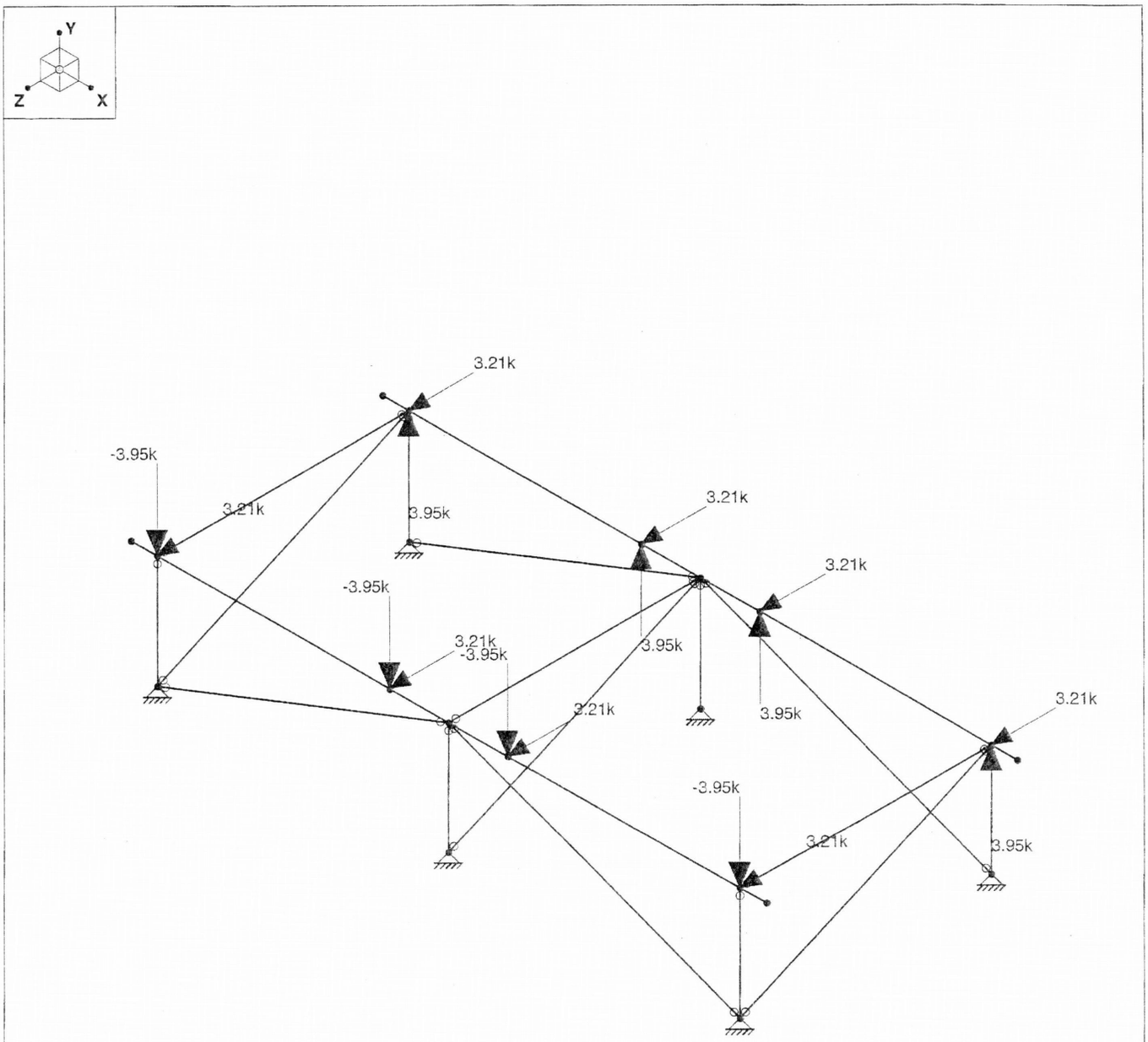

Loads: BLC 4, SeismicZ
Results for LC 1, ASCE 1

VLMK	Pioneer Cooling Tower Frame	
KDR		Sept 2, 2010 at 10:18 AM
210309		Platform.r3d

Global

Display Sections for Member Calcs	20
Max Internal Sections for Member Calcs	39
Include Shear Deformation	Yes
Include Warping	No
Area Load Mesh (in^2)	144
Merge Tolerance (in)	.12
P-Delta Analysis Tolerance	0.50%
Vertical Axis	Y

Hot Rolled Steel Code	AISC : ASD 13th
Cold Formed Steel Code	AISI 01: ASD
Wood Code	NDS 2005: ASD
Wood Temperature	< 100F
Concrete Code	ACI 2005
Masonry Code	MSJC 05/IBC 06 ASD

Number of Shear Regions	4
Region Spacing Increment (in)	4
Biaxial Column Method	Exact Integration
Parme Beta Factor (PCA)	.65
Concrete Stress Block	Rectangular
Use Cracked Sections	Yes
Bad Framing Warnings	No
Unused Force Warnings	Yes

Hot Rolled Steel Properties

	Label	E [ksi]	G [ksi]	Nu	Therm (\1E5 F)	Density[k/ft^3]	Yield[ksi]
1	A36 Gr.36	29000	11154	.3	.65	.49	36
2	A572 Gr.50	29000	11154	.3	.65	.49	50
3	A992	29000	11154	.3	.65	.49	50
4	A500 Gr.42	29000	11154	.3	.65	.49	42
5	A500 Gr.46	29000	11154	.3	.65	.49	46

Hot Rolled Steel Section Sets

	Label	Shape	Type	Design List	Material	Design Rul...	A [in2]	Iyy [in4]	Izz [in4]	J [in4]
1	Column	HSS4X4X4	Column	SquareTube	A36 Gr.36	Typical	3.365	7.788	7.788	12.758
2	Beam	W12X26	Beam	Wide Flange	A36 Gr.36	Typical	7.65	17.3	204	.3
3	Brace	LL2.5X2.5X4X3	None	None	A36 Gr.36	Typical	2.38	3.37	1.41	.049

Joint Coordinates and Temperatures

	Label	X [in]	Y [in]	Z [in]	Temp [F]	Detach From Diap...
1	N1	0	0	0	0	
2	N2	133	0	0	0	
3	N3	266	0	0	0	
4	N4	0	0	115	0	
5	N5	133	0	115	0	
6	N6	266	0	115	0	
7	N7	0	52	0	0	
8	N8	133	52	0	0	
9	N9	266	52	0	0	
10	N10	0	52	115	0	
11	N11	133	52	115	0	
12	N12	266	52	115	0	
13	N13	-12	52	0	0	

Joint Coordinates and Temperatures (Continued)

	Label	X [in]	Y [in]	Z [in]	Temp [F]	Detach From Diap...
14	N14	-12	52	115	0	
15	N15	278	52	0	0	
16	N16	278	52	115	0	
17	N17	106	52	0	0	
18	N18	160	52	0	0	
19	N19	106	52	115	0	
20	N20	160	52	115	0	

Joint Boundary Conditions

	Joint Label	X [k/in]	Y [k/in]	Z [k/in]	X Rot.[k-ft/rad]	Y Rot.[k-ft/rad]	Z Rot.[k-ft/rad]	Footing
1	N4	Reaction	Reaction	Reaction				
2	N1	Reaction	Reaction	Reaction				
3	N2	Reaction	Reaction	Reaction				
4	N5	Reaction	Reaction	Reaction				
5	N6	Reaction	Reaction	Reaction				
6	N3	Reaction	Reaction	Reaction				

Joint Loads and Enforced Displacements (BLC 1 : Dead)

	Joint Label	L,D,M	Direction	Magnitude[(k,k-ft), (in,rad), (k*s^2/in, k*in^2)]
1	N10	L	Y	-4.105
2	N7	L	Y	-4.105
3	N17	L	Y	-4.105
4	N18	L	Y	-4.105
5	N20	L	Y	-4.105
6	N19	L	Y	-4.105
7	N12	L	Y	-4.105
8	N9	L	Y	-4.105

Joint Loads and Enforced Displacements (BLC 2 : Snow)

	Joint Label	L,D,M	Direction	Magnitude[(k,k-ft), (in,rad), (k*s^2/in, k*in^2)]
1	N7	L	Y	-.9
2	N10	L	Y	-.9
3	N19	L	Y	-.9
4	N17	L	Y	-.9
5	N18	L	Y	-.9
6	N20	L	Y	-.9
7	N12	L	Y	-.9
8	N9	L	Y	-.9

Joint Loads and Enforced Displacements (BLC 3 : SeismicX)

	Joint Label	L,D,M	Direction	Magnitude[(k,k-ft), (in,rad), (k*s^2/in, k*in^2)]
1	N10	L	X	3.21
2	N7	L	X	3.21
3	N17	L	X	3.21
4	N18	L	X	3.21
5	N20	L	X	3.21
6	N19	L	X	3.21
7	N12	L	X	3.21
8	N9	L	X	3.21
9	N12	L	Y	-3.38
10	N9	L	Y	-3.38
11	N10	L	Y	3.38
12	N7	L	Y	3.38

Joint Loads and Enforced Displacements (BLC 4 : SeismicZ)

	Joint Label	L,D,M	Direction	Magnitude[(k,k-ft), (in,rad), (k*s^2/in, k*in^2)]
1	N10	L	Z	3.21
2	N7	L	Z	3.21
3	N17	L	Z	3.21
4	N19	L	Z	3.21
5	N20	L	Z	3.21
6	N18	L	Z	3.21
7	N9	L	Z	3.21
8	N12	L	Z	3.21
9	N7	L	Y	3.95
10	N17	L	Y	3.95
11	N18	L	Y	3.95
12	N9	L	Y	3.95
13	N10	L	Y	-3.95
14	N19	L	Y	-3.95
15	N20	L	Y	-3.95
16	N12	L	Y	-3.95

Basic Load Cases

	BLC Description	Category	X Gravity	Y Gravity	Z Gravity	Joint	Point	Distributed	Area (Me...	Surface (...
1	Dead	DL		-1		8				
2	Snow	SL				8				
3	SeismicX	ELX				12				
4	SeismicZ	ELZ				16				

Load Combinations

	Description	Sol...	PDelta	SRSS	BLC	Factor	BLC	Factor	BLC	Factor	BLC	Factor	BLC	Factor	BLC	Factor	BLC	Factor	BLC	Factor
1	ASCE 1	Yes	Y		DL	1														
2	ASCE 3 (b)	Yes	Y		DL	1	SL	1												
3	ASCE 5 (b) (a)	Yes	Y		DL	1	ELX	.7												
4	ASCE 5 (b) (b)	Yes	Y		DL	1	ELZ	.7												
5	ASCE 5 (b) (c)	Yes	Y		DL	1	ELX	-.7												
6	ASCE 5 (b) (d)	Yes	Y		DL	1	ELZ	-.7												
7	ASCE 6 (d) (a)	Yes	Y		DL	1	ELX	.525	SL	.75										
8	ASCE 6 (d) (b)	Yes	Y		DL	1	ELZ	.525	SL	.75										
9	ASCE 6 (d) (c)	Yes	Y		DL	1	ELX	-.525	SL	.75										
10	ASCE 6 (d) (d)	Yes	Y		DL	1	ELZ	-.525	SL	.75										
11	ASCE 8 (a)	Yes	Y		DL	.6	ELX	.7												
12	ASCE 8 (b)	Yes	Y		DL	.6	ELZ	.7												
13	ASCE 8 (c)	Yes	Y		DL	.6	ELX	-.7												
14	ASCE 8 (d)	Yes	Y		DL	.6	ELZ	-.7												

Envelope Joint Displacements

	Joint		X [in]	LC	Y [in]	LC	Z [in]	LC	X Rotation ...	LC	Y Rotation ...	LC	Z Rotation ...	LC
1	N1	max	0	11	0	12	0	6	2.152e-4	12	7.715e-4	6	2.375e-4	5
2		min	0	5	0	6	0	8	-2.59e-4	6	-7.555e-4	12	-2.375e-4	3
3	N2	max	0	5	0	12	0	6	3.792e-4	12	5.349e-6	11	2.063e-4	5
4		min	0	3	0	6	0	8	-4.504e-4	6	-5.349e-6	13	-2.063e-4	3
5	N3	max	0	3	0	12	0	6	2.152e-4	12	7.555e-4	12	2.375e-4	5
6		min	0	13	0	6	0	8	-2.59e-4	6	-7.715e-4	6	-2.375e-4	3
7	N4	max	0	11	0	14	0	4	2.389e-4	12	7.825e-4	6	2.374e-4	5
8		min	0	5	0	4	0	6	-2.827e-4	6	-7.663e-4	12	-2.374e-4	3
9	N5	max	0	5	0	14	0	4	4.213e-4	12	5.237e-6	11	2.062e-4	5
10		min	0	3	0	4	0	6	-4.925e-4	6	-5.237e-6	13	-2.062e-4	3

Envelope Joint Displacements (Continued)

	Joint		X [in]	LC	Y [in]	LC	Z [in]	LC	X Rotation ...	LC	Y Rotation ...	LC	Z Rotation ...	LC
11	N6	max	0	3	0	14	0	4	2.389e-4	12	7.663e-4	12	2.374e-4	5
12		min	0	13	0	4	0	6	-2.827e-4	6	-7.825e-4	6	-2.374e-4	3
13	N7	max	.012	3	.002	12	.011	12	5.208e-5	14	7.715e-4	6	8.361e-6	12
14		min	-.012	5	-.007	6	-.013	6	-8.957e-5	4	-7.555e-4	12	-2.813e-4	6
15	N8	max	.011	3	.002	12	.02	12	5.208e-5	14	5.349e-6	11	1.168e-5	13
16		min	-.011	5	-.011	6	-.023	6	-8.957e-5	4	-5.349e-6	13	-1.168e-5	11
17	N9	max	.012	3	.002	12	.011	12	5.208e-5	14	7.555e-4	12	2.813e-4	6
18		min	-.012	5	-.007	6	-.013	6	-8.957e-5	4	-7.715e-4	6	-8.361e-6	12
19	N10	max	.012	3	0	14	.012	12	3.258e-5	14	7.823e-4	6	-1.432e-6	14
20		min	-.012	5	-.005	4	-.015	6	-6.998e-5	4	-7.663e-4	12	-2.715e-4	4
21	N11	max	.011	3	0	14	.022	12	3.258e-5	14	5.353e-6	11	1.168e-5	13
22		min	-.011	5	-.008	4	-.026	6	-6.998e-5	4	-5.353e-6	13	-1.168e-5	11
23	N12	max	.012	3	0	14	.012	12	3.258e-5	14	7.663e-4	12	2.715e-4	4
24		min	-.012	5	-.005	4	-.015	6	-6.998e-5	4	-7.823e-4	6	1.432e-6	14
25	N13	max	.012	3	.001	12	.002	12	5.208e-5	14	7.715e-4	6	8.424e-6	12
26		min	-.012	5	-.003	6	-.004	6	-8.957e-5	4	-7.555e-4	12	-2.812e-4	6
27	N14	max	.012	3	.001	11	.003	12	3.258e-5	14	7.823e-4	6	-1.369e-6	14
28		min	-.012	5	-.003	5	-.005	6	-6.998e-5	4	-7.663e-4	12	-2.714e-4	4
29	N15	max	.012	3	.001	12	.002	12	5.208e-5	14	7.555e-4	12	2.812e-4	6
30		min	-.012	5	-.003	6	-.004	6	-8.957e-5	4	-7.715e-4	6	-8.424e-6	12
31	N16	max	.012	3	.001	13	.003	12	3.258e-5	14	7.663e-4	12	2.714e-4	4
32		min	-.012	5	-.003	3	-.005	6	-6.998e-5	4	-7.823e-4	6	1.369e-6	14
33	N17	max	.011	3	.003	12	.038	12	5.208e-5	14	7.628e-4	4	1.847e-4	10
34		min	-.011	5	-.021	6	-.042	6	-8.957e-5	4	-7.57e-4	14	2.037e-6	12
35	N18	max	.011	3	.003	12	.038	12	5.208e-5	14	7.57e-4	14	-2.037e-6	12
36		min	-.011	5	-.021	6	-.042	6	-8.957e-5	4	-7.628e-4	4	-1.847e-4	10
37	N19	max	.011	3	0	14	.04	12	3.258e-5	14	7.589e-4	4	1.878e-4	4
38		min	-.011	5	-.019	4	-.044	6	-6.998e-5	4	-7.531e-4	14	-1.536e-6	14
39	N20	max	.011	3	0	14	.04	12	3.258e-5	14	7.531e-4	14	1.536e-6	14
40		min	-.011	5	-.019	4	-.044	6	-6.998e-5	4	-7.589e-4	4	-1.878e-4	4

Envelope Joint Reactions

	Joint		X [k]	LC	Y [k]	LC	Z [k]	LC	MX [k-ft]	LC	MY [k-ft]	LC	MZ [k-ft]	LC
1	N4	max	5.326	5	10.409	4	4.771	6	0	1	0	1	0	1
2		min	-3.997	11	-2.244	14	-4.765	4	0	1	0	1	0	1
3	N1	max	5.33	5	10.568	6	0	8	0	1	0	1	0	1
4		min	-3.994	11	-2.399	12	-.005	6	0	1	0	1	0	1
5	N2	max	.003	3	15.953	6	.001	8	0	1	0	1	0	1
6		min	-.003	5	-3.659	12	-.011	6	0	1	0	1	0	1
7	N5	max	.002	3	16.27	4	8.454	6	0	1	0	1	0	1
8		min	-.002	5	-3.969	14	-8.446	4	0	1	0	1	0	1
9	N6	max	3.997	13	10.409	4	4.771	6	0	1	0	1	0	1
10		min	-5.326	3	-2.244	14	-4.765	4	0	1	0	1	0	1
11	N3	max	3.994	13	10.568	6	0	8	0	1	0	1	0	1
12		min	-5.33	3	-2.399	12	-.005	6	0	1	0	1	0	1
13	Totals:	max	17.976	5	42.985	2	17.976	6						
14		min	-17.976	3	21.471	12	-17.976	4						

Envelope AISC 13th ASD Steel Code Checks

	Member	Shape	Code Che...	Loc[in]	LC	Shear C...	Loc[in]	Dir	LC	Pnc/om [k]	Pnt/om [k]	Mnyy/om ...	Mnzz/o...	Cb	Eqn
1	M1	HSS4X4...	.056	0	4	.000	0	y	5	68.204	72.53	8.415	8.415	1.649	H1-1b
2	M2	HSS4X4...	.072	0	6	.000	0	z	5	68.204	72.53	8.415	8.415	1	H1-1b
3	M3	HSS4X4...	.234	0	6	.000	0	y	1	68.204	72.53	8.415	8.415	1	H1-1a
4	M4	HSS4X4...	.072	0	6	.000	0	z	3	68.204	72.53	8.415	8.415	1	H1-1b
5	M5	HSS4X4...	.056	0	4	.000	0	y	3	68.204	72.53	8.415	8.415	1.649	H1-1b

Envelope AISC 13th ASD Steel Code Checks (Continued)

	Member	Shape	Code Che...	Loc[in]	LC	Shear C...	Loc[in]	Dir	LC	Pnc/om [k]	Pnt/om [k]	Mnyy/om ...	Mnzz/o...	Cb	Eqn
6	M6	HSS4X4...	.091	0	4	.000	0	y	3	68.204	72.53	8.415	8.415	1	H1-1b
7	M7	W12X26	.484	145	4	.163	145	y	4	30.919	164.91	14.677	44.687	1.586	H1-1b
8	M8	W12X26	.483	145	6	.163	145	y	6	30.919	164.91	14.677	44.531	1.58	H1-1b
9	M9	W12X26	.014	57.5	6	.004	0	y	4	120.849	164.91	14.677	66.826	1.137	H1-1b
10	M10	W12X26	.022	57.5	6	.003	115	y	6	120.849	164.91	14.677	66.826	1.137	H1-1b
11	M11	W12X26	.014	57.5	6	.004	0	y	4	120.849	164.91	14.677	66.826	1.137	H1-1b
12	M12	LL2.5X2....	.603	71.402	5	.003	0	y	5	10.392	51.305	3.605	2.273	1	H1-1a
13	M13	LL2.5X2....	.603	71.402	3	.003	0	y	3	10.392	51.305	3.605	2.273	1	H1-1a
14	M14	LL2.5X2....	.433	63.105	4	.003	126.21	y	3	13.305	51.305	3.605	2.273	1	H1-1a
15	M15	LL2.5X2....	.433	63.105	4	.003	0	y	5	13.305	51.305	3.605	2.273	1	H1-1a
16	M16	LL2.5X2....	.603	71.402	5	.003	0	y	5	10.392	51.305	3.605	2.273	1	H1-1a
17	M17	LL2.5X2....	.603	71.402	3	.003	142.804	y	3	10.392	51.305	3.605	2.273	1	H1-1a
18	M18	LL2.5X2....	.737	63.105	4	.003	126.21	y	3	13.305	51.305	3.605	2.273	1	H1-1a

VLMK CONSULTING ENGINEERS
3933 SW Kelly Avenue • Portland • Oregon 97239-4393
P 503.222.4453 503.248.9263 F

Job: PIONEER COOLING TOWER
Client: McKINSTRY
Job No. 210309 By KDR
Date 09/10 Sheet No. S-13

FRAMING CHECKS:

EXISTING W18x35: (WORST CASE)

W_{SL} = 25 PSF (9.4') = 235 PLF

W_{ROOF} = 80 PSF (9.4') = 752 PLF

W_{CURB} = 150 PCF (1')(1') = 150 PLF

W_{LL} = 50 PSF (9.4') = 470 PLF

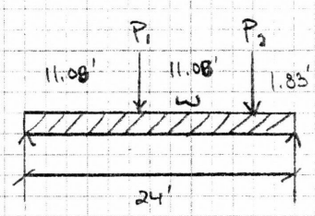

[24 STUDS]

P_{1max} = 15.1 K
P_{2max} = 10.0 K
} RISA OUTPUT

* HORIZONTAL LOADS TAKEN OUT IN SLAB OVER METAL DECK

[SEE ENERCALC OUTPUT]

EXISTING BEAM ADEQUATE

S-14

Printed: 2 SEP 2010, 10:13AM

Composite Steel Beam Design

File: g:\Acad2010\210309\Calcs\210309.ec6
ENERCALC, INC. 1983-2010, Ver: 6.1.51

Lic. # : KW-06002728 — **License Owner : VLMK CONSULTING ENGINEERS**

Description : Existing W18x35

Material Properties

Calculations per IBC 2006, CBC 2007, 13th AISC

Analysis Method : Allowable Stress Design
Beam Bracing : Beam is Fully Braced against lateral-torsion buckling by attached sla
Load Combination 2006 IBC & ASCE 7-05
Fy : Steel Yield : 36.0 ksi E: Modulus : 29,000.0 ksi

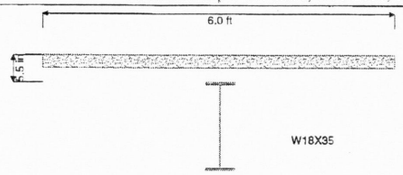

Composite Beam Section Data

Beam is SHORED for Concrete Placement

Total Slab Thickness	5.50 in	Concrete f'c	3.0 ksi	Stud Diameter	3/4" in
Effective Width	6.0 ft	Concrete Density	145.0 pcf	Qn : Stud Capacity	15.910 k
Metal Deck . . .	Verco, PLW3 Formlok	Rib Height	3.0 in	Top Width	4.50 in
Ribs :	Perpendicular	Rib Spacing	12.0 in	Btm Width	4.50 in

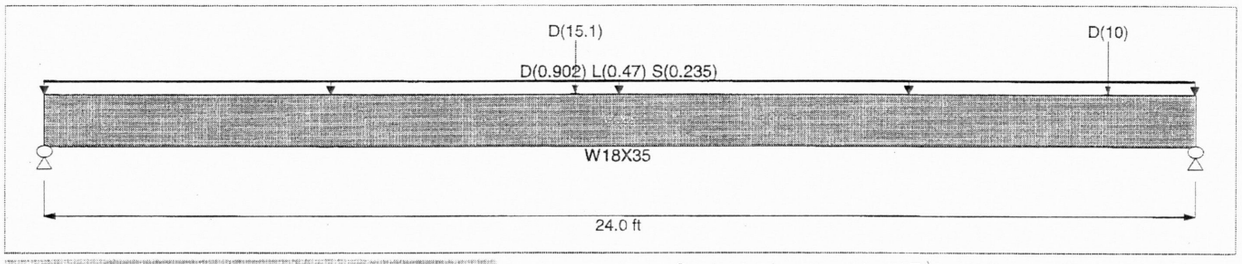

Applied Loads

Service loads entered. Load Factors will be applied for calculations.

Beam + Slab self weight calculated and added to loads
Load for Span Number 1
Uniform Load : D = 0.9020, L = 0.470, S = 0.2350 k/ft, Tributary Width = 1.0 ft
Point Load : D = 15.10 k @ 11.083 ft
Point Load : D = 10.0 k @ 22.166 ft

DESIGN SUMMARY

Design OK

Maximum Bending Stress Ratio = **0.957** : 1
Section used for this span **W18X35**
Percent Composite Action **50** %

	Construction	After Curing
Mu : Applied	0	203.31 k-ft
Mn / Omega : Allowable	0	212.34 k-ft

Load Combination +D+0.750L+0.750S+H
Location of maximum on span 11.114ft
Span # where maximum occurs Span # 1

Maximum Shear Stress Ratio = **0.295** : 1
Section used for this span **W18X35**
Vu : Applied 33.799 k
Vn/Omega : Allowable 114.47 k
Load Combination +D
Location of maximum on span 24.0 ft
Span # where maximum occurs Span # 1

Maximum Deflection
Max Downward L+Lr+S Deflection 0.157 in
Max Upward L+Lr+S Deflection 0.000 in
Live Load Deflection Ratio 1834

Max Downward Total Deflection 0.622 in
Max Upward Total Deflection 0.000 in
Total Deflection Ratio 463

Shear Stud Requirements

From Support 1 @ to 11.11 ft use 12 studs.
From 11.11 ft to support 2 use 12 studs.

Maximum Forces & Stresses for Load Combinations

Load Comb & Design Length	Span #	Max Stress Ratios M	Max Stress Ratios V	Bending Summary Ma Max	Bending Summary Mn / Omega	Shear Summary Va	Shear Summary Vn / Omega
Overall Maximums							
Span L = 24 ft	1	0.957	0.231	203.31	212.34	26.48	114.47
+D							
Span L = 24 ft	1	0.779	0.176	165.45	212.34	20.14	114.47
+D+L+H							
Span L = 24 ft	1	0.938	0.225	199.10	212.34	25.78	114.47

Printed: 2 SEP 2010, 10:13AM
File: g:\Acad2010\210309\Calcs\210309.ec6
ENERCALC, INC. 1983-2010 Ver: 6.1.51
License Owner : VLMK CONSULTING ENGINEERS

Composite Steel Beam Design

Lic. # : KW-06002728

Description : Existing W18x35

Load Comb & Design Length	Span #	Max Stress Ratios M	Max Stress Ratios V	Bending Summary Ma Max	Bending Summary Mn / Omega	Shear Summary Va	Shear Summary Vn / Omega
+D+S+H Span L = 24 ft	1	0.858	0.201	182.28	212.34	22.96	114.47
+D+0.750Lr+0.750L+H Span L = 24 ft	1	0.898	0.213	190.69	212.34	24.37	114.47
+D+0.750L+0.750S+H Span L = 24 ft	1	0.957	0.231	203.31	212.34	26.48	114.47
+D+0.750Lr+0.750L+0.750W+H Span L = 24 ft	1	0.898	0.213	190.69	212.34	24.37	114.47
+D+0.750L+0.750S+0.750W+H Span L = 24 ft	1	0.957	0.231	203.31	212.34	26.48	114.47
+D+0.750Lr+0.750L+0.5250E+H Span L = 24 ft	1	0.898	0.213	190.69	212.34	24.37	114.47
+D+0.750L+0.750S+0.5250E+H Span L = 24 ft	1	0.957	0.231	203.31	212.34	26.48	114.47

Maximum Deflections for Load Combinations - Unfactored Loads

Load Combination		Span	Deflection	Location in Span	Moment of Inertia Ixx - Used	I-Steel	I-Trans	I per C-I3-1	I per C-I3-2
D Only	Upward	1	0.4647	12.081	1,168.124	0.000	0.000	0.000	0.000
D Only	Downward	1	0.0000	0.000	1,168.124	0.000	0.000	0.000	0.000
L Only	Upward	1	0.1047	12.081	1,168.124	0.000	0.000	0.000	0.000
L Only	Downward	1	0.0000	0.000	1,168.124	0.000	0.000	0.000	0.000
S Only	Upward	1	0.0523	12.081	1,168.124	0.000	0.000	0.000	0.000
S Only	Downward	1	0.0000	0.000	1,168.124	0.000	0.000	0.000	0.000
Lr+L+S	Upward	1	0.1570	12.081	1,168.124	0.000	0.000	0.000	0.000
Lr+L+S	Downward	1	0.0000	0.000	1,168.124	0.000	0.000	0.000	0.000
D+L+Lr	Upward	1	0.6217	12.081	1,168.124	0.000	0.000	0.000	0.000
D+L+Lr	Downward	1	0.0000	0.000	1,168.124	0.000	0.000	0.000	0.000
D+Lr+S	Upward	1	0.5170	12.081	1,168.124	0.000	0.000	0.000	0.000
D+Lr+S	Downward	1	0.0000	0.000	1,168.124	0.000	0.000	0.000	0.000

Support notation : Far left is #1

Maximum Vertical Reactions - Unfactored

Load Combination	Support 1	Support 2
Overall MAXimum	28.596	35.914
D Only	20.136	27.454
L Only	5.640	5.640
S Only	2.820	2.820
Lr+L+S	8.460	8.460
D+L+Lr	28.596	35.914
D+Lr+S	22.956	30.274

Steel Section Properties : W18X35

Depth	=	17.700 in	I xx	=	510.00 in^4	I yy	=	15.300 in^4
Web Thick	=	0.300 in	S xx	=	57.60 in^3	S yy	=	5.120 in^3
Flange Width	=	6.000 in	R xx	=	7.040 in	R yy	=	1.220 in
Flange Thick	=	0.425 in	Zx	=	66.500 in^3	Zy	=	8.060 in^3
Area	=	10.300 in^2				J	=	0.506 in^4
Weight	=	35.061 plf						

Composite Section Properties

Span Number / Plastic N. A. Location	Analysis Type	% Shear Connection	Plastic N.A. from Bottom	Sum Qn Shear (k)	# Studs per 1/2 Span	Mn - Capacity k-ft	Moment of Inertia I-Steel	I-Trans	I-Lwr Bound
Span 1		100.0	21.180	370.800	24	412.21	510.0	1,678.7	1,426.5
PNA in Slab		95.0	17.657	352.260	23	431.59	510.0	1,678.7	1,409.8
PNA in Flange		90.0	17.614	333.720	21	423.28	510.0	1,678.7	1,391.5
PNA in Flange		85.0	17.571	315.180	20	414.90	510.0	1,678.7	1,371.4
PNA in Flange		80.0	17.528	296.640	19	406.47	510.0	1,678.7	1,349.5
PNA in Flange		75.0	17.485	278.100	18	397.97	510.0	1,678.7	1,325.6
PNA in Flange		70.0	17.443	259.560	17	389.42	510.0	1,678.7	1,299.4
PNA in Flange		65.0	17.400	241.020	16	380.80	510.0	1,678.7	1,270.9
PNA in Flange		60.0	17.357	222.480	14	372.13	510.0	1,678.7	1,239.6
PNA in Flange		55.0	17.314	203.940	13	363.40	510.0	1,678.7	1,205.5
PNA in Flange		50.0	17.271	185.400	12	354.61	510.0	1,678.7	1,168.1
PNA in Flange		45.0	16.333	166.860	11	345.01	510.0	1,678.7	1,127.2
PNA in Flange		40.0	15.475	148.320	10	334.08	510.0	1,678.7	1,082.4
PNA in Web		35.0	14.617	129.780	9	321.82	510.0	1,678.7	1,033.1
PNA in Web									
PNA in Web									

Composite Steel Beam Design

Printed: 2 SEP 2010, 10:13AM
File: g:\Acad2010\210309\Calcs\210309.ec6
ENERCALC, INC. 1983-2010, Ver: 6.1.51

Lic. # : KW-06002728
License Owner : VLMK CONSULTING ENGINEERS

Description : Existing W18x35

Composite Section Properties

Span Number	Plastic N. A. Location	Analysis Type	% Shear Connection	Plastic N.A. from Bottom	Sum Qn Shear (k)	# Studs per 1/2 Span	Mn - Capacity k-ft	Moment of Inertia I-Steel	I-Trans	I-Lwr Bound
	PNA in Web		30.0	13.758	111.240	7	308.24	510.0	1,678.7	979.0
	PNA in Web		25.0	12.900	92.700	6	293.32	510.0	1,678.7	919.4

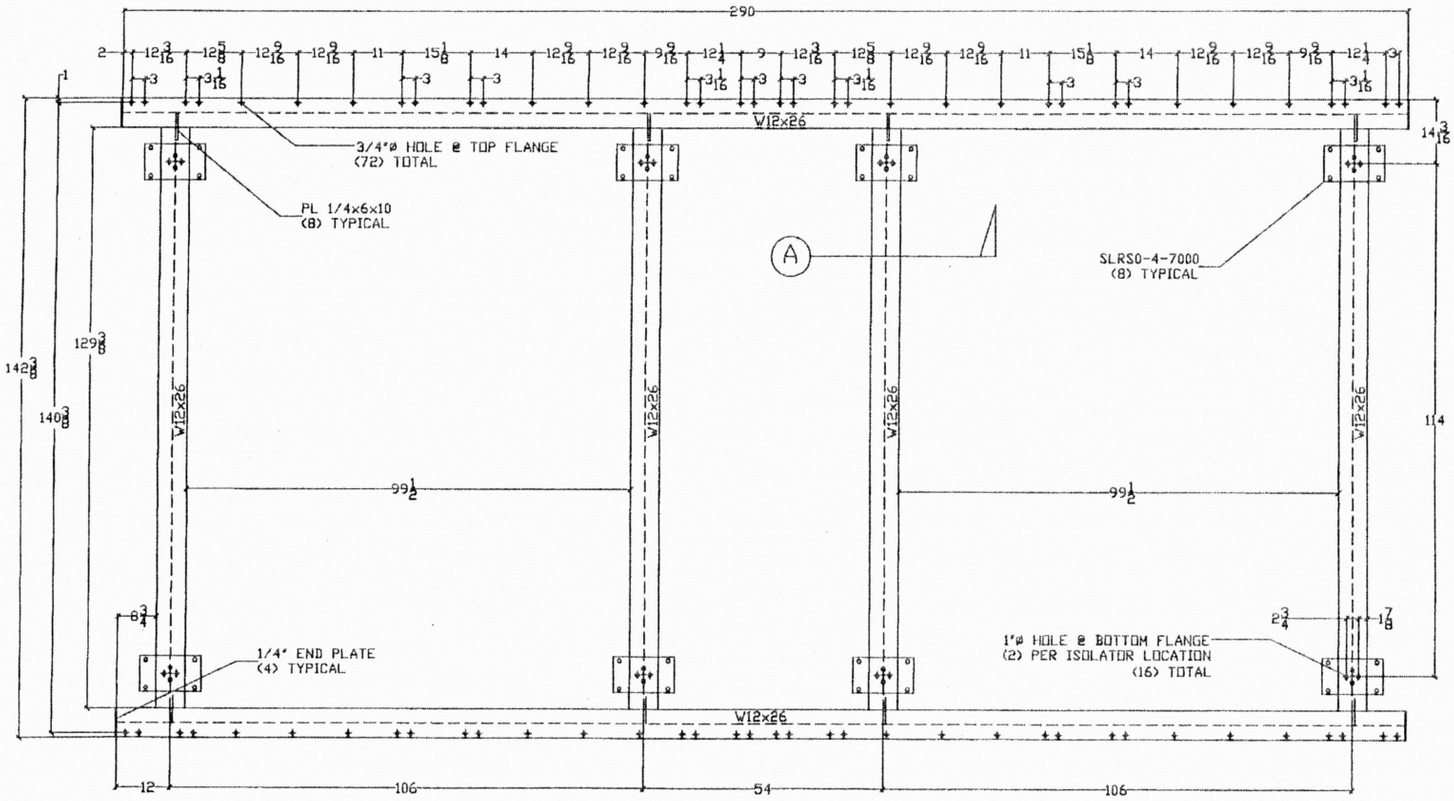

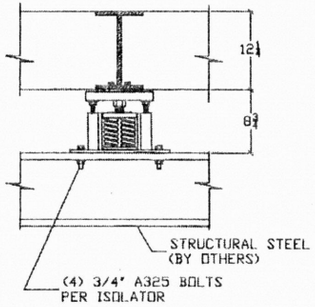

SECTION VIEW - A

UNIT MODEL: EVAPCO AT 212-624

OPER. WEIGHT: 30335 LBS

STEEL BASE WIGHT: 2500 LBS

TOTAL WEIGHT: 32835 LBS

SPECIFIED ISOLATOR DEFLECTION: 1.0"

ISOLATOR REF. DWG.: WF-25826-A

MASON TYPE WFSL STEEL BASE

(NTS)

REVISIONS

DWN: LD CHKD: DATE: 8/31/10

REGISTERED PROFESSIONAL ENGINEER 14,828 OREGON MAR. 27, 1990 GUMMADI DHARMA REDDY

EXPIRES: 12/31/10

MASON INDUSTRIES, INC

HAUPPAUGE, NY 11788
PHONE (631) 348-0282
FAX (631) 348-0279

ANAHEIM, CA 92801
PHONE (714) 535-2727
FAX (714) 535-5738

CERTIFIED FOR

PROJECT NAME: PIONEER PLACE

CUSTOMER NAME: MASON OREGON

PO #: 1650

MASON EO#: 25826

TAG: CT-1 DWG. NO.: WF-25826-01

MASON INDUSTRIES, Inc.
Manufacturers of Vibration Control Products
350 Rabro Drive, Hauppauge, NY 11788, 631/348-0282, FAX 631/348-0279
2101 W. Crescent St., Suite D, Anaheim, CA 92801, 714/535-2727, FAX 714/535-5738
TELEX 96-8464

SEISMIC OVERTURNING CALCULATIONS

SEISMIC RESTRAINT: TYPE SLR(S) MOUNT
CODE(S): IBC 2006; CBC 2007

Equipment overturning calculations based on seismic load applied at a critical angle.
As defined in ASCE 7-05, section 13.3.1, the seismic Horizontal force, F_{ph}, may be calculated using the following formula:

$$F_{ph(calc)} = \frac{0.4 a_p S_{DS} W_p}{\left(\frac{R_p}{I_p}\right)}\left(1 + 2\frac{z}{h}\right)$$

Except that: F_{ph} shall not be less than $F_{ph(min)} = 0.3 S_{DS} I_p W_p$ and need not be more than $F_{ph(max)} = 1.6 S_{DS} I_p W_p$.

Where: W_p = Component operating weight
a_p = Component Amplification Factor, refer to ASCE 7-05, Table 13.6-1.
R_p = Component Response Modification Factor, refer to ASCE 7-05, Table 13.6-1
S_{ds} = Design spectra response acceleration at short period, refer to ASCE 7-05, section 11.4.4.
I_p = Component Importance Factor, refer to ASCE 7-05, section 13.1.3.
z = Component Attachment Elevation with respect to grade.
h = Structure Roof Elevation with respect to grade.

Convert from Design Strength to Allowable Stress Design: $F_{ph(a)} = \frac{F_{ph(calc)}}{1.4}$

Vertical Uplift Force: Fpv = 0.2*Sds*Wp/1.4

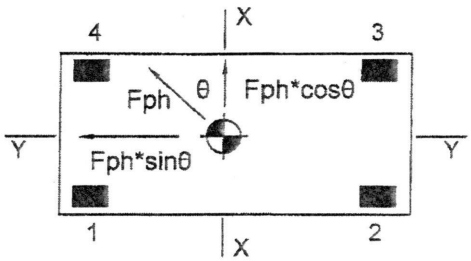

b1 = Maximum Length (between isolation)
b2 = Maximum Width (between isolation)
h = C. G. Height
N = Number of Mounts

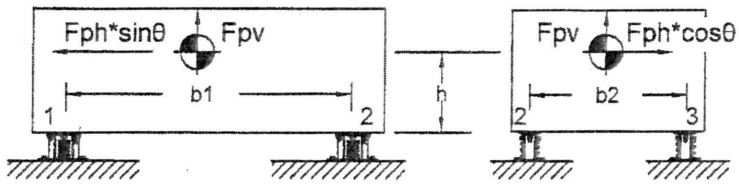

Consider load applied in any horizontal direction
Transverse component = $F_{ph(a)} * Cos\theta$ Longitudinal component = $F_{ph(a)} * Sin\theta$

The net uplift load on mount location 2.

$$P_t = \frac{.9W - F_{pv(a)}}{N} - \frac{F_{ph(a)} * Cos\theta * h}{I_{yy}} * \left(\frac{b_2}{2}\right) - \frac{F_{ph(a)} * Sin\theta * h}{I_{xx}}\left(\frac{b_1}{2}\right)$$

The net compressive load on mount location 4.

$$P_c = \frac{.9W + F_{pv(a)}}{N} + \frac{F_{ph(a)} * Cos\theta * h}{I_{yy}} * \left(\frac{b_2}{2}\right) + \frac{F_{ph(a)} * Sin\theta * h}{I_{xx}}\left(\frac{b_1}{2}\right)$$

Where $I_{xx} = \frac{N(N+2)}{12(N-2)} b_1^2$ and $I_{yy} = \frac{N}{4} b_2^2$

REGISTERED PROFESSIONAL ENGINEER
14,828
OREGON
MAR. 27, 1990
GUMMADI DHARMA REDDY
EXPIRES 12 31 [illegible]

R-5

MASON INDUSTRIES, Inc.
Manufacturers of Vibration Control Products
350 Rabro Drive, Hauppauge, NY 11788, 631/348-0282, FAX 631/348-0279
2101 W. Crescent St., Suite D, Anaheim, CA 92801, 714/535-2727, FAX 714/535-5738
TELEX 96-8454

SEISMIC OVERTURNING CALCULATIONS

SEISMIC RESTRAINT: TYPE SLRSOEBP MOUNT
STRUCTURE: STEEL
CONNECTION: STEEL BOLTS

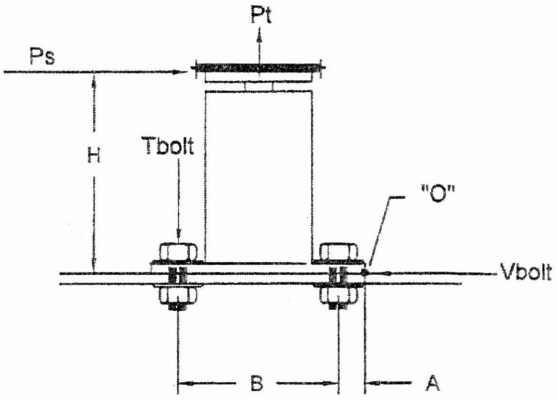

Maximum shear per location

$$P_s = \frac{F_{ph(a)}}{N}$$

To maximize the values

$$\frac{dP_t}{d\theta} = 0 \quad \& \quad \frac{dP_c}{d\theta} = 0$$ will yield a condition

$$Tan\theta = \frac{I_{yy} * b_1}{I_{xx} * b_2} \qquad \theta = Tan^{-1}\left(\frac{I_{yy} * b_1}{I_{xx} * b_2}\right)$$

Based on maximum tension Pt and maximum shear Ps

H = Mount Height
A = Edge Distance
B = Bolt Center
Pt = Tension on Mount
Ps = Shear on Mount
n = Number of anchors per mount
Tbolt = Tension per anchor bolt
Vbolt = Shear per anchor bolt

Maximum overturning loads on bolts:

Summing the moment about "O"

$$T_{bolt} = \frac{P_s * H}{\frac{n}{2}\left(A + B + \left(\frac{A^2}{A+B}\right)\right)} + \frac{P_t}{n} \qquad V_{bolt} = \frac{Ps}{n}$$

Steel bolt connection designs:

Reference AISC, 13th Edition, Chapter J3.6 (ASD)

$$ft = \frac{Tbolt}{At} \qquad fv = \frac{Vbolt}{Ak}$$

$$Tallow = \frac{Rn}{\Omega} = \frac{F'nt * Ab}{2}$$

$$F'nt = 1.3*Fnt - \frac{\Omega * Fnt}{Fnv} * fv \leq Fnt$$

$$Vallow = \frac{Rn}{\Omega} = \frac{Fnv * Ab}{2}$$

Fnt & Fnv from table J3.2
Ab = nominal unthreaded body area

Check for:

$$\frac{Tbolt}{Tallow} \leq 1.00 \quad \& \quad \frac{Vbolt}{Vallow} \leq 1.00$$

REGISTERED PROFESSIONAL ENGINEER
14,828
OREGON
MAR. 27, 1990
GUMMADI DHARMA REDDY
EXPIRES 12-31-10