STRUCTURAL CALCULATIONS

FOR

TWINSTAR CREDIT UNION

1510A SW 6th AVE

PORTLAND, OR 97201

-- FABRIC COVERED AWNING --

REGISTERED PROFESSIONAL ENGINEER
12,187
OREGON
JULY 15, 1983
JOHN E. NORDLING

EXPIRES: 12 / 31 / 12

1 2 November 2011

PLAN CHECK RESPONSE
REVISED DETAIL (B).

Contents

Summary	1
Details A - D	2 - 5
Awning Calculations	C1 - C3
Awning Analysis	D1 - D4

NORDLING STRUCTURAL ENGINEERS, LLC

6775 SW 111th, Suite 200 · Beaverton OR, 97008

Proj. No.: 11-278

TWINSTAR CREDIT UNION
AWNING

PIKE AWNING COMPANY

Date: OCT 2011 By: JHW Sheet No.: COVER

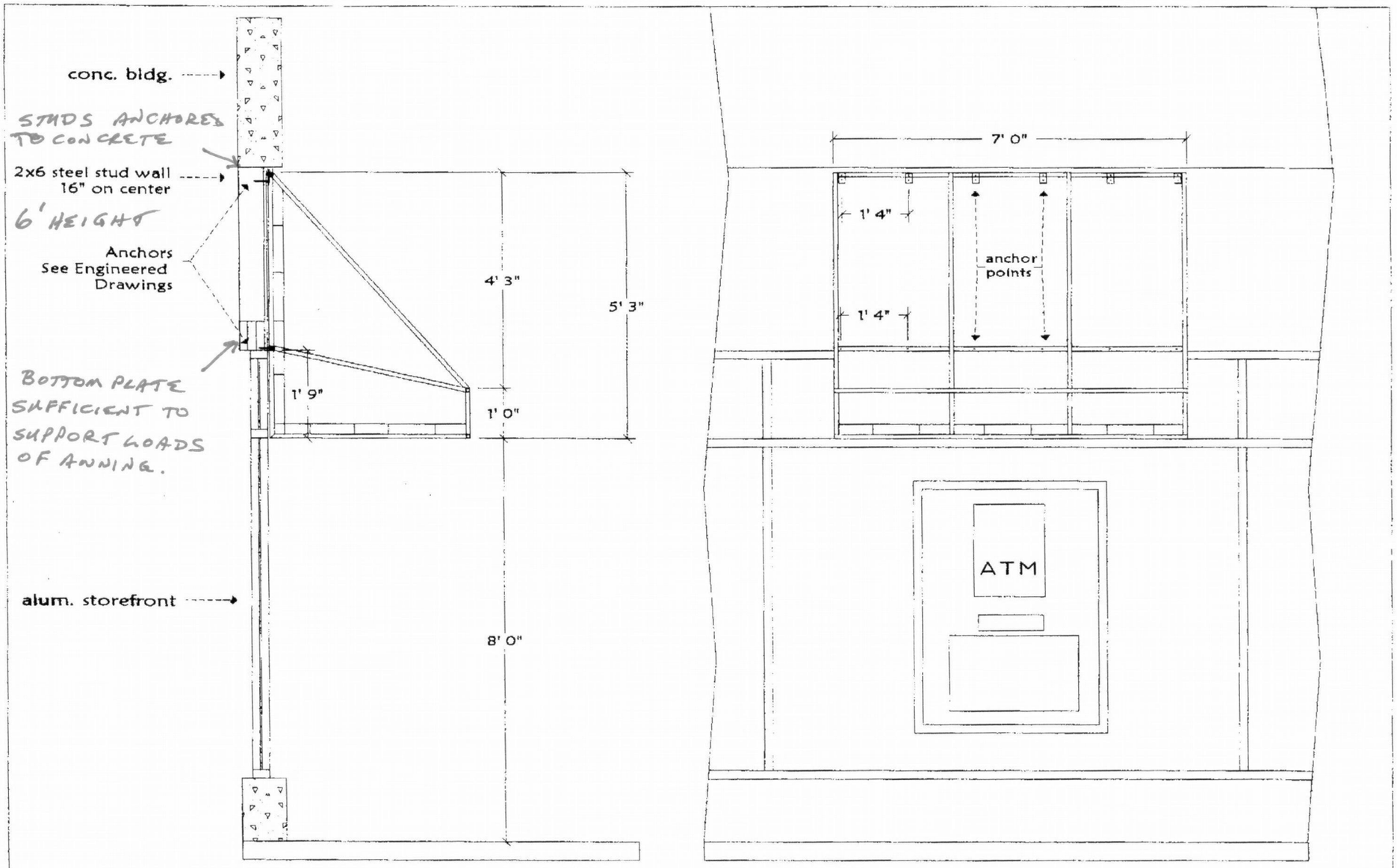

Pike Awning Co.
7300 SW. LANDMARK LN.
PORTLAND OR 97232
PH#(503) 624-5600
FX#(503) 968-5440
dan@pikeawning.com

DATE: 10/7/2011	PROJECT:	DESCRIPTION: QTY: 1	
BY: DAN SPEARING	TWINSTAR CREDIT UNION	STYLE: FABRIC AWNING	
SHEET: 1	1510A SW 6TH AVE.	FABRIC: SUNB. # TBD	
SCALE: 1' 0" = 32' 0"	PORTLAND, OR 97201	FRAME: ALUM.	
		POWDER COAT: TBD	

SUMMARY

FABRIC COVERED AWNING DESIGN CRITERIA

2010 Oregon Structural Specialty Code

Wind 95 MPH (3 sec gust) Exp B

Live Load: 15 psf

Snow Load: 20 psf + Drifting Snow Load (20 psf minimum)
PER SNOW LOAD ANALYSIS FOR OREGON (THIRD EDITION) DECEMBER 2007
STATEWIDE ALTERNATE METHOD No. OSSC 08-01 - ISSUED MAY 7, 2008

Dead Load 1 psf

Connections to existing metal stud wall. Verify stud gauge to be 43 mils (min).

There is one new 5'-3" x 4'-0" x 7'-0" awning.

AWNING DESIGN INCLUDES PORTLAND TITLE 24 - 32.52.010

1. Full Design Wind Load
   a. Design of awning frame work
   b. Design of connections to structure
2. 15 psf frame work load uniform over the entire horizontal projection
   a. Design of awning frame work
3. Attachment to building supporting full snow load + drifting snow
   a. Design of connections to structure

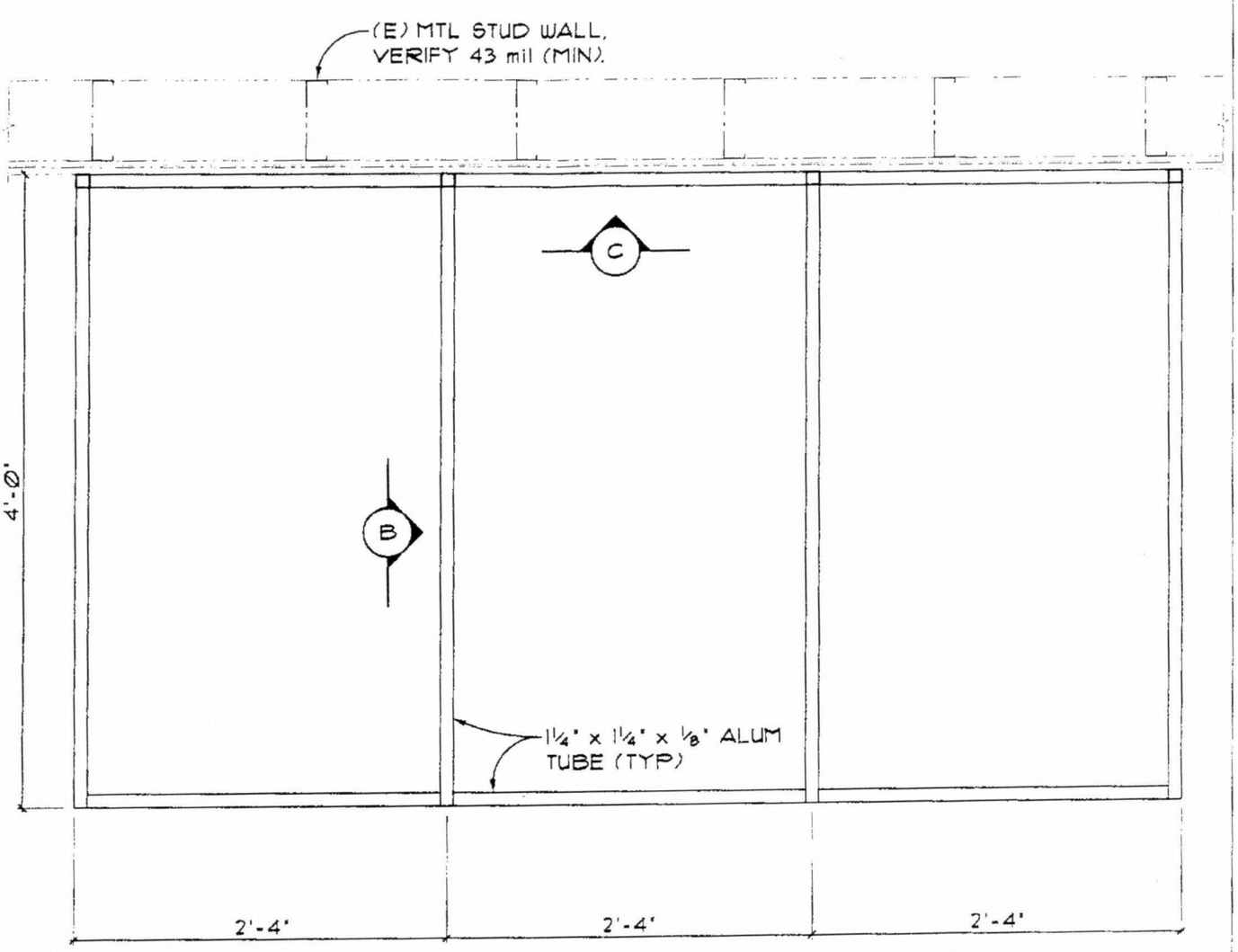

A AWNING PLAN

REGISTERED PROFESSIONAL ENGINEER 12,187 OREGON JULY 15, 1983 JOHN E. NORDLING

EXPIRES: 12 / 31 / 12

NORDLING STRUCTURAL ENGINEERS, LLC
6775 SW 111th, Suite 200 · Beaverton OR, 97008

Proj. No.: 11-278
TWINSTAR CREDIT UNION
AWNING
PIKE AWNING COMPANY
Date: OCT 2011 By: JHW Sheet No.: 2

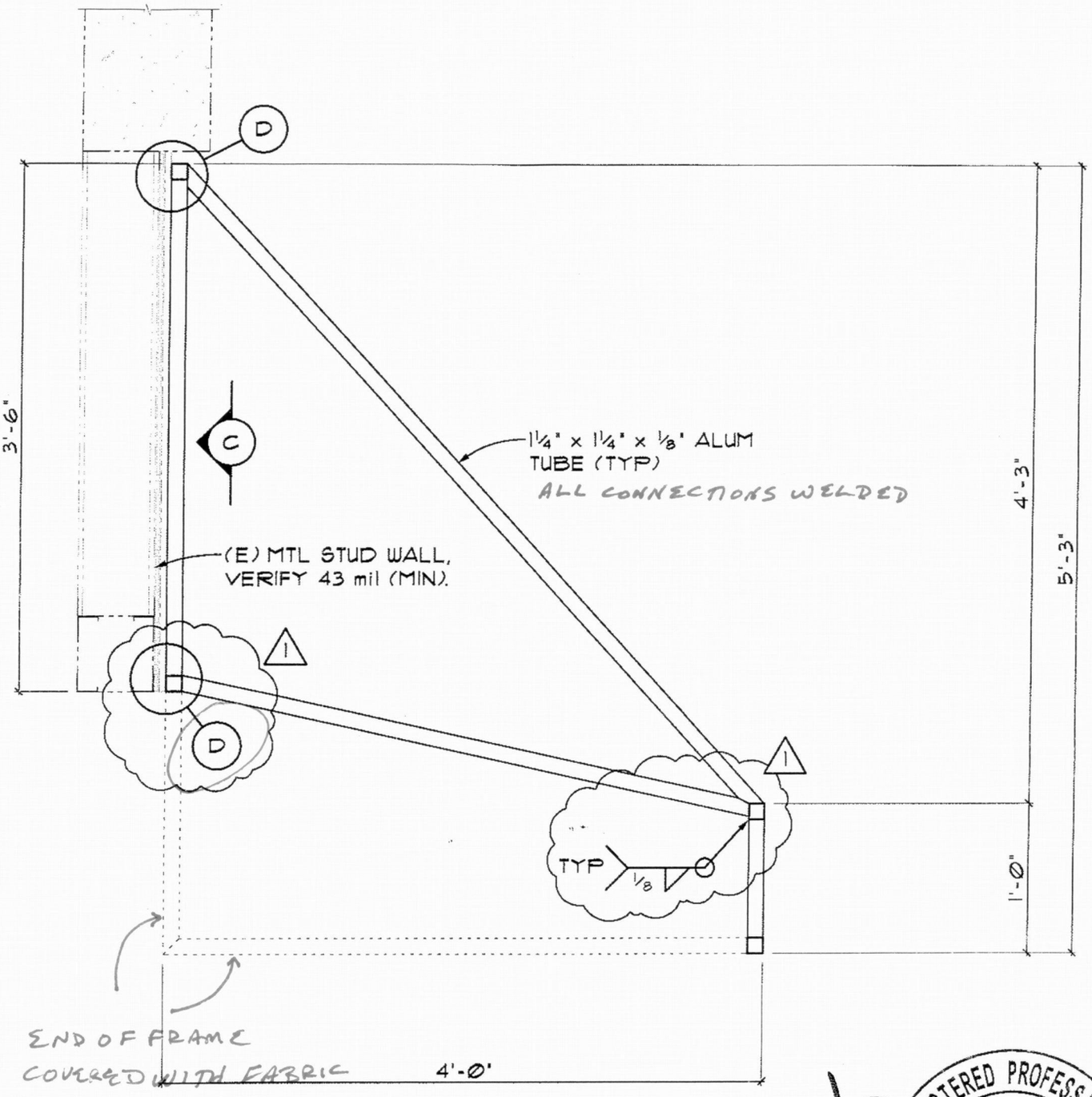

REGISTERED PROFESSIONAL ENGINEER
12 187
OREGON
JULY 15, 1983
JOHN E. NORDLING

EXPIRES: 12 / 31 / 12

B

AWNING SECTION

REVISED VERSION

NORDLING STRUCTURAL ENGINEERS, LLC

6775 SW 111th, Suite 200 · Beaverton OR, 97008

Proj. No.: 11-278

TWINSTAR CREDIT UNION
AWNING

PIKE AWNING COMPANY

Date: OCT 2011 By: JHW Sheet No.: 3

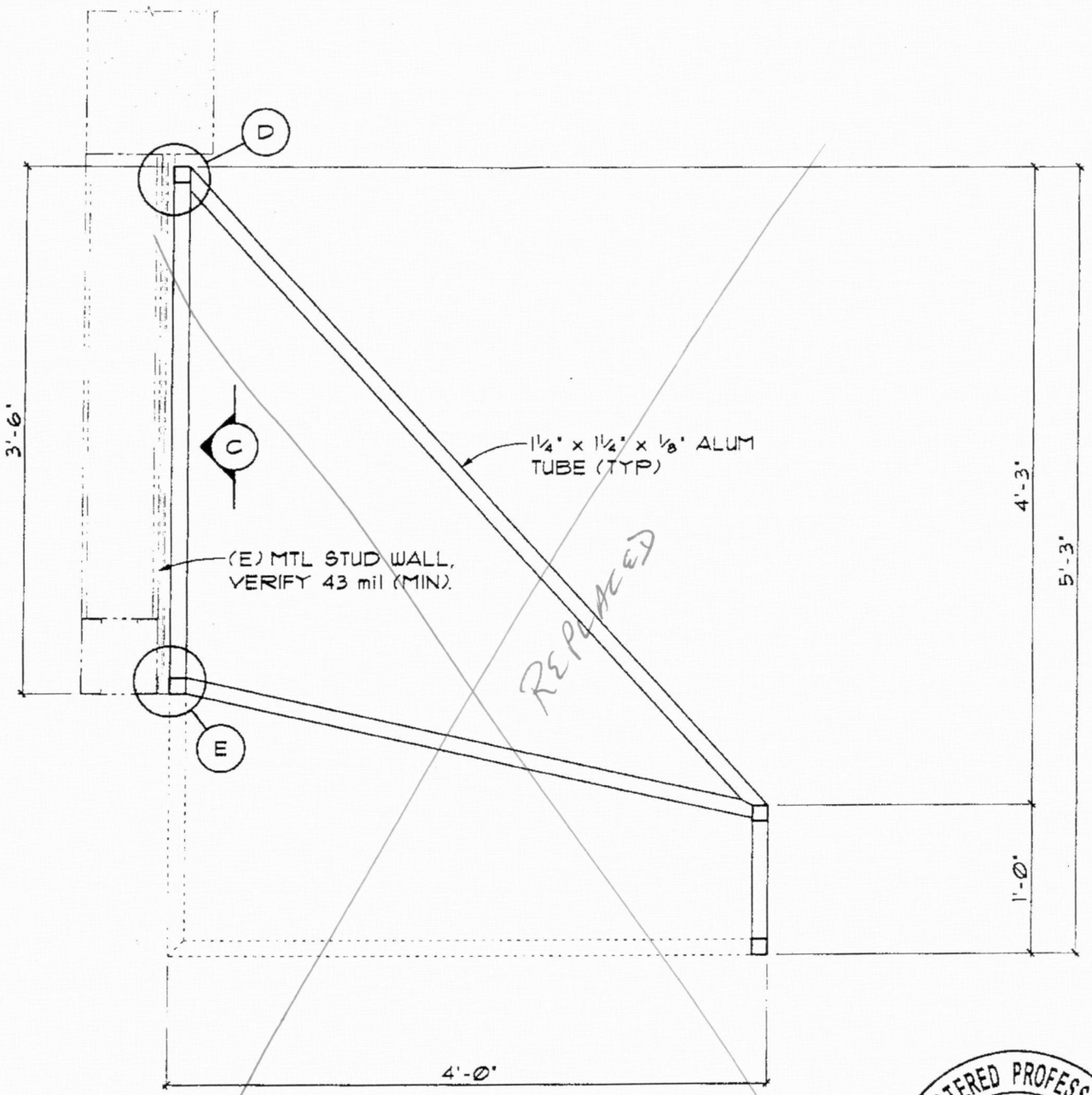

REPLACED

REGISTERED PROFESSIONAL ENGINEER
12,187
OREGON
JULY 15, 1983
JOHN E. NORDLING

EXPIRES: 12 / 31 / 12

B AWNING SECTION

NORDLING STRUCTURAL ENGINEERS, LLC

6775 SW 111th, Suite 200 · Beaverton OR 97008

Proj. No.: 11-278

TWINSTAR CREDIT UNION
AWNING

PIKE AWNING COMPANY

Date: OCT 2011 By: JHW Sheet No.: 3

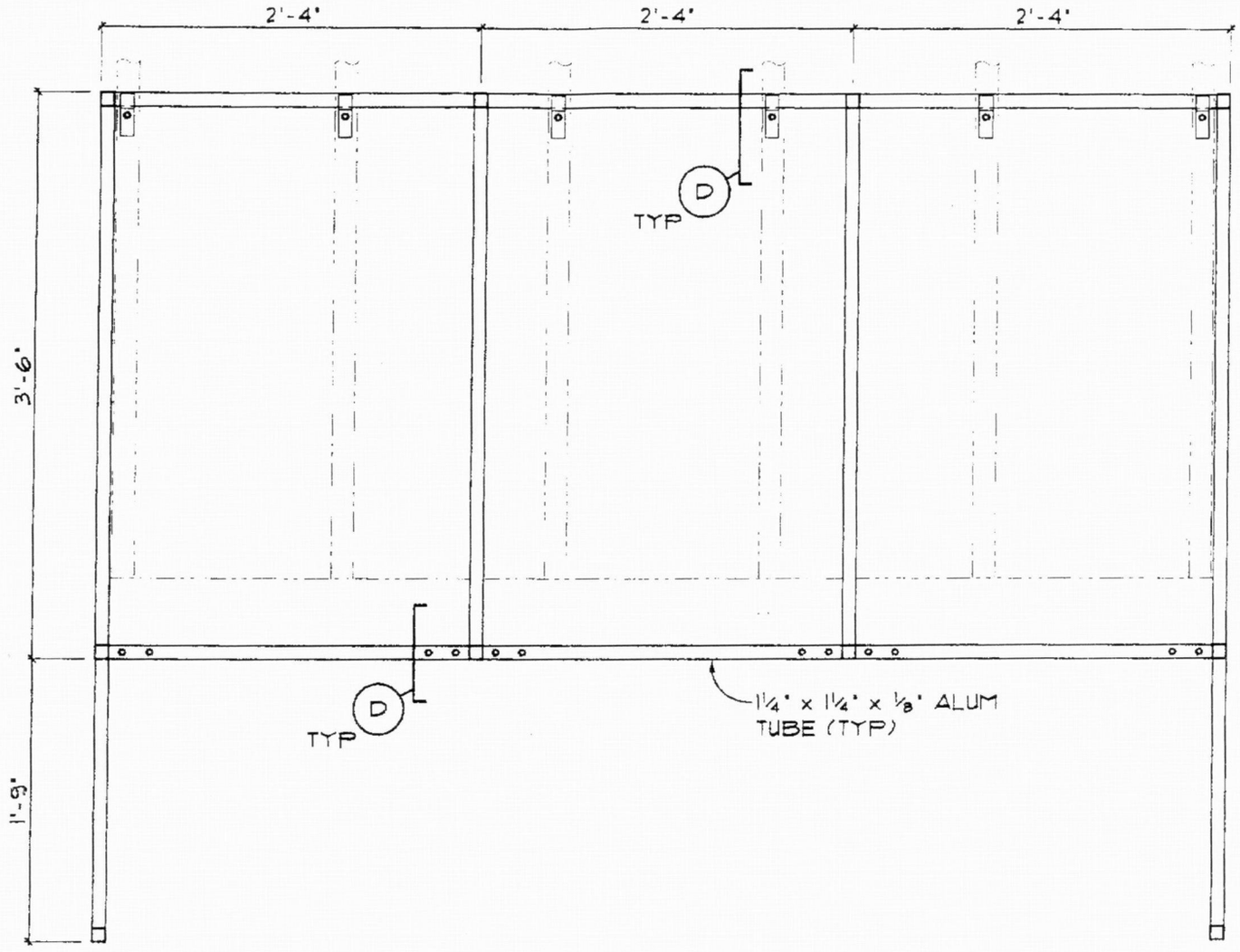

C AWNING ELEVATION

REGISTERED PROFESSIONAL ENGINEER 12,187 OREGON JULY 15, 1983 JOHN E. NORDLING

EXPIRES: 12 / 31 / 12

NORDLING STRUCTURAL ENGINEERS, LLC

6775 SW 111th, Suite 200 · Beaverton OR, 97008

Proj. No.: 11-278

TWINSTAR CREDIT UNION AWNING

PIKE AWNING COMPANY

Date: OCT 2011 By: JHW Sheet No.: 4

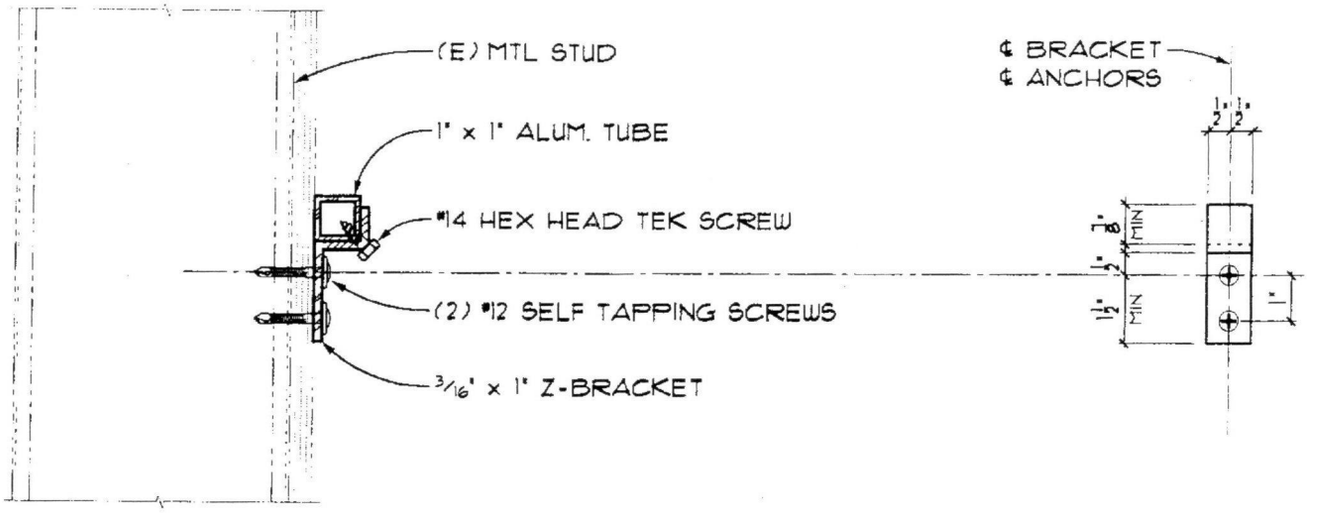

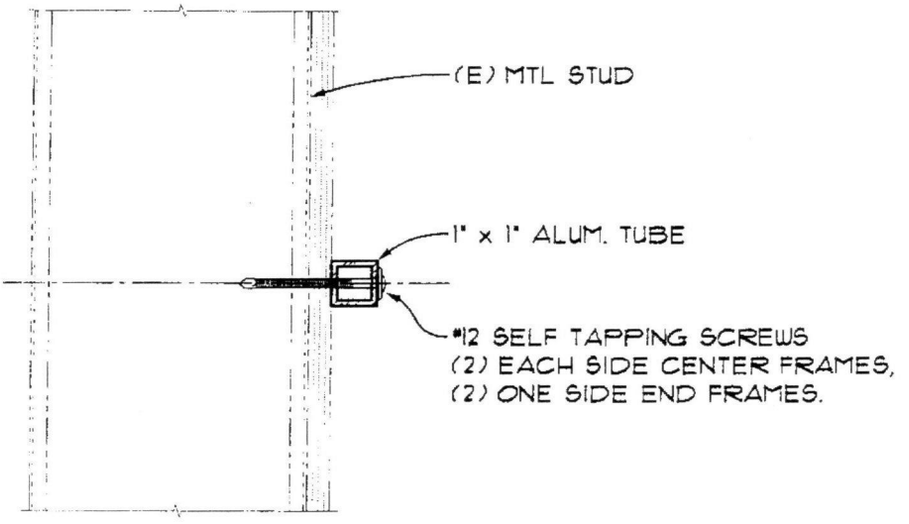

REGISTERED PROFESSIONAL ENGINEER
12,167
OREGON
JULY 15, 1983
JOHN E. NORDLING

EXPIRES: 12 / 31 / 12

D CONNECTION DETAIL

NORDLING STRUCTURAL ENGINEERS, LLC

6775 SW 111th, Suite 200 · Beaverton OR, 97008

Proj. No.: 11-278

TWINSTAR CREDIT UNION AWNING

PIKE AWNING COMPANY

Date: OCT 2011 By: JHW Sheet No.: 5

AWNING CRITERIA

ALL MEMBERS TO BE:

1¼" x 1¼" x ⅛" ALUMINUM TUBE

I_x = 0.120 in^4

S_x = 0.192 in^3

FABRIC AWNING DESIGN REQUIREMENTS

LC1	+ WIND LOAD	FRAME WORK
LC2	- WIND LOAD	CONNECTIONS
LC3	15 psf LOAD	FRAME WORK
LC4	SNOW & DRIFT	CONNECTIONS

MEMBER CONNECTIONS TO BE:

WELDED ALL AROUND

STANDARD AWNING SIZE

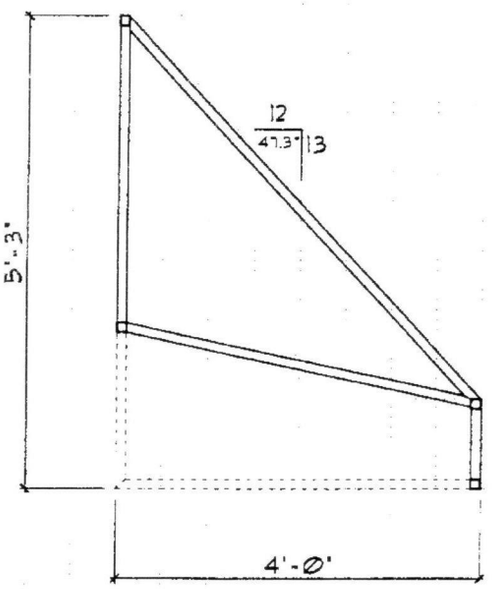

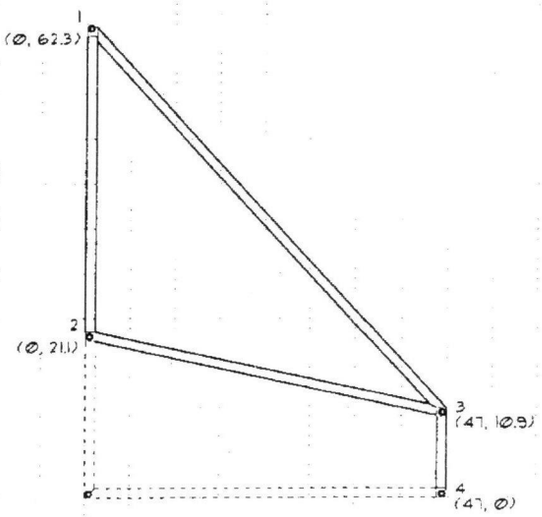

NORDLING STRUCTURAL ENGINEERS, LLC

6775 SW 111th, Suite 200 · Beaverton OR, 97008

Proj. No.: 11-278

TWINSTAR CREDIT UNION AWNING

PIKE AWNING COMPANY

Date: OCT 2011 By: JHW Sheet No.: C1

LOADING CRITERIA

DL = 1 psf x 2'-4" o/c = 2.5 plf

W = 17.2 psf ASCE 7.05 WIND DESIGN - SHEET D1

= 17.2 psf x 2'-4" o/c = 40 plf

FW = 15.0 psf x 2'-4" o/c = 35 plf

SNOW = 10.5 psf x 2'-4" o/c = 25 plf

$DRIFT_L$ = 33 psf x 2'-4" o/c = 76 plf

$DRIFT_R$ = 17 psf x 2'-4" o/c = 39 plf

C_S = 1 - (47.3° - 15°) / 55° (ASCE 7.05 7-2c)

= 41%

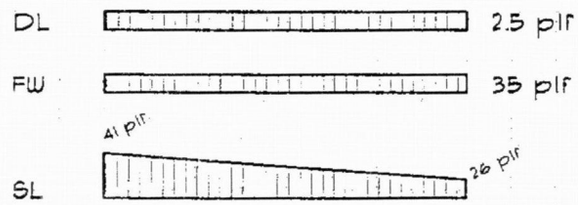

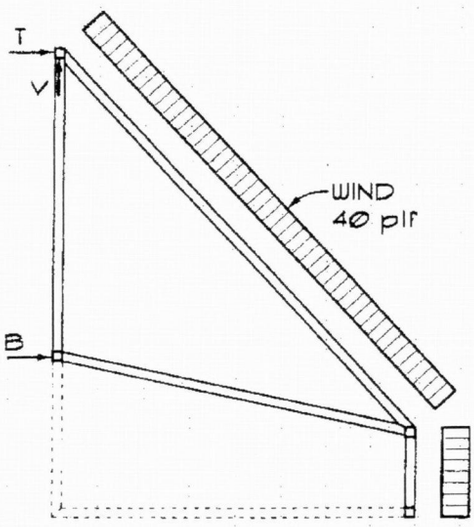

	LC1	LC2	LC4	
T	30	-46	-110	LBS
B	-238	254	110	LBS
V	-142	171	208	LBS

CONNECTIONS

LC1	WIND	T	=	238	lbs	AT 2'-4" o/c
		V	=	142	lbs	
LC4	SNOW	T	=	110	lbs	
		V	=	208	lbs	

LC1	WIND	T	=	136	lbs	AT 16" o/c
		V	=	81	lbs	
LC4	SNOW	T	=	63	lbs	
		V	=	119	lbs	

Screw	#12-24	2	Count	
Grade	SAE Grade 2			
Pitch	24 / in			
Fu	74,000	psi - Fy	57,000	psi
Allowable Tension Stress			29,600	psi
Backing	MS 50	50	ksi	
T / Ga	54 Mil	0.0566	in	
Fu / Fsu	65,000	psi		
$TSI_{(1)}$	0.018 in^2 / thread			

Allowable Loads

Tension	715	lbs	Screw Tension
Tension	169	lbs	Pullout
Shear	365	lbs	Screw Shear
Bearing	954	lbs	Bearing

Adjusted Allowable Loads

Tension	169	lbs
Shear	365	lbs

$$UNITY = \left[\frac{T}{T_{ALL}}\right] + \left[\frac{V}{V_{ALL}}\right]$$

	Tension		136	lbs
	Shear		81	lbs
Unity	0.51	<	1.00	

	Tension		63	lbs
	Shear		119	lbs
Unity	0.35	<	1.00	

NORDLING STRUCTURAL ENGINEERS, LLC

6775 SW 111th, Suite 200 · Beaverton OR, 97008

Proj. No.: 11-278

TWINSTAR CREDIT UNION AWNING

PIKE AWNING COMPANY

Date: OCT 2011 By: JHW Sheet No.: C2

Z-CLIP

LC1 WIND T = 136 lbs

LC4 SNOW T = 63 lbs

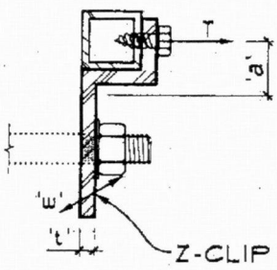

Clips/Anchor Geometry

A36	#clips	1

a	0.50	in
't'	3/16	in
'w'	1.00	in

Section Property

S = 1.0 * 0.1875^2 / 6 ($wt^2 / 6 = bd^2 / 6$)

= 0.0059 in^3

Fb = 36,000 psi * 0.75

= 27,000 psi SNOW

x 1.33 = 35,910 psi WIND

Tension - SNOW

M = 63 lbs * 0.500 in / 1

= 32 in-lbs

f_b = 32 in-lbs / 0.0059 in^3

= 5,376 psi ok

Tension - WIND

M = 136 lbs * 0.500 in / 1

= 68 in-lbs

f_b = 68 in-lbs / 0.0059 in^3

= 11,605 psi ok

Use (1) 3/16" x 1" Z-Clip

NORDLING STRUCTURAL ENGINEERS, LLC

6775 SW 111th, Suite 200 · Beaverton OR, 97008

Proj. No.: 11-278

TWINSTAR CREDIT UNION AWNING

PIKE AWNING COMPANY

Date: OCT 2011 By: JHW Sheet No.: C3

ASCE 7-05 Wind Force Standard						Components and Cladding - Method 2
Wind Speed :	95	mph	Exposure :	B	Importance (Iw) :	1.00
Structure Type :	Building - Components & Cladding					
Building Type :	Enclosed Building				Topographic Feature	
Height (h) :	20	ft			Homogeneous	
					Height of Hill (h)	0 ft
q_h :	12.25	psf			Crest Length (L_h)	0 ft
GCp :	1.4	corner zone			Crest to Structure Dist (x)	0 ft
External Pressure :	**17.2**	**psf**			K_d : 0.85	K_1 : 0.00
					GC_{pi} : ± 0.18	K_2 : 0.00
					K_{zt} : 1.00	K_3 : 0.00

Snow Drift Analysis

OSSC 08-01, May 7 2008

Snow Loads			L upper	50'-0"	
Ground Snow Load	15	psf	L lower	4'-0"	
Roof Snow Load	10.5	psf			
Drift Type	Lower Structure		**W**	**8.17**	ft
Upper Roof Pitch	0 / 12				
Seperation Distance	0				
Height Hr (hc + hb)	10'-0"				

Drift Surcharge Only Considered When		Drift Surcharge Applies ?
hc / hb > 0.2 (hc = hr-hb) [(hr-hb) / hb > 0.2] =	14.19	**Yes**

hd = (0.43 (Lu^(1/3)) * ((Pg + 10)^(1/4)) - 1.5) * ((20-S)/20)	2.04	ft
hb = Pf / γ	0.66	ft.
γ = 0.13Pg – 14.0 <= 30 pcf	15.95	pcf

SUMMARY

Surcharge Load due to Drifting	**Pd**	**33**	**psf**
Drift Load at Lower Roof Edge		17	psf

1" x 1" x 1/8" ALUMINUM TUBE

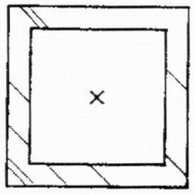

SECTION PROPERTIES

Area	:	0.438		
Bounding Box	X :	0.500	::	0.500
	Y :	0.500	::	0.500
		XX		YY
Moment of Inertia	:	0.057	::	0.057
Section Modulus	:	0.114	::	0.114
Radius of Gyration	:	0.361	::	0.361

Geometry data

Nodes

Node	X [in]	Y [in]	Z [in]	Rigid Floor
1	0.00	62.30	0.00	0
2	0.00	21.10	0.00	0
3	47.00	10.90	0.00	0
4	47.00	0.00	0.00	0

Restraints

Node	TX	TY	TZ	RX	RY	RZ
1	1	1	1	0	0	0
2	1	0	1	0	0	0
3	0	0	1	0	0	0
4	0	0	1	0	0	0

Members

Member	NJ	NK	Description	Section	Material	d0 [in]	dL [in]	lg factor
1	1	3	Frame	TA 1.0 x 1.0 x 0.125	Fy 25 (Aluminum)	0.00	0.00	0.00
2	3	4	Frame	TA 1.0 x 1.0 x 0.125	Fy 25 (Aluminum)	0.00	0.00	0.00
3	1	2	Frame	TA 1.0 x 1.0 x 0.125	Fy 25 (Aluminum)	0.00	0.00	0.00
4	2	3	Frame	TA 1.0 x 1.0 x 0.125	Fy 25 (Aluminum)	0.00	0.00	0.00

Load data

Load conditions

Condition	Description	Comb.	Category
dl	Dead load	No	DL
wl	Wind Load	No	WIND
fw	Frame Work Live Load	No	LL
sl	Snow and Drift Load	No	SNOW
LC1	dl+wl	Yes	
LC2	dl-wl	Yes	
LC3	fw	Yes	
LC4	dl+sl	Yes	

Distributed force on members

Condition	Member	Dir1	Val1 [Lb/ft]	Val2 [Lb/ft]	Dist1 [in]	%	Dist2 [in]	%
dl	1	Y	-2.50	-2.50	0.00	No	100.00	Yes
wl	1	2	40.00	40.00	0.00	No	100.00	Yes
	2	2	40.00	40.00	0.00	No	100.00	Yes
fw	1	Y	-35.00	-35.00	0.00	No	100.00	Yes
sl	1	Y	-41.00	-26.00	0.00	Yes	100.00	Yes

Analysis Results

Reactions

	Forces [Lb]			Moments [Lb*ft]		
Node	FX	FY	FZ	MX	MY	MZ
Condition LC1=dl+wl						
1	30	-142	0.00000	0.00000	0.00000	0.00000
2	-238	0	0.00000	0.00000	0.00000	0.00000
Condition LC2=dl-wl						
1	-46	171	0.00000	0.00000	0.00000	0.00000
2	254	0	0.00000	0.00000	0.00000	0.00000
Condition LC4=dl+sl						
1	-110	208	0.00000	0.00000	0.00000	0.00000
2	110	0	0.00000	0.00000	0.00000	0.00000

Load conditions to be included in design :

LC1=dl+wl
LC2=dl-wl
LC3=fw

Description	Section	Member	Ctrl Eq.	Ratio	Status	Reference
Frame	*TA 1.0 x 1.0 x 0.125*	1	LC1 at 100.00%	0.63	OK	(H1-1a)
		2	LC2 at 0.00%	0.09	OK	(Sec. F)
		3	LC2 at 0.00%	0.50	OK	(H1-1b)
		4	LC2 at 100.00%	0.51	OK	(H1-1b)

MEMBER 1

Condition Station	Dist to J [in]	Axial [Lb]	Shear V2 [Lb]	Plane 1-2 M33 [Lb*ft]	Shear V3 [Lb]	Plane 1-3 M22 [Lb*ft]	Torsion [Lb*ft]
LC1=dl+wl							
0%	0.000	-114	-110	81	0.000	0.000	0.000
50%	34.824	-119	0	-77	0.000	0.000	0.000
100%	69.649	-125	111	85	0.000	0.000	0.000

TA 1.25 x 1.25 x 0.125		
b	1.250	in
d	1.250	in
t	0.125	in
A	0.563	in^2
Av	0.313	in^2
Ix	0.120	in^4
Sx	0.192	in^3
rx	0.462	in
Iy	0.120	in^4
Sy	0.192	in^3
ry	0.462	in
J	0.240	in^4

Constants	
nu	1.95
ny	1.65
na	1.2
Bc	27.64
Dc	0.14
Cc	78.38
Bs	17.63
Ds	0.07
Cs	98.14

Fv	8.485	psi
Ft	15.385	psi

165	pcf	
0.64	plf	

6063-T6		
Ftu	30	ksi
Fty	25	ksi
Fcy	25	ksi
Fsu	19	ksi
Fsy	14	ksi
E	10,100	ksi
kt	1.00	
kc	1.12	Type 2

	Member	1	1	1
	Load Case	LC1	LC1	LC1
Dist to J	[ft]	5.80	5.80	5.80
Axial	[Lb]	-114	-119	-125
V_{22}	[Lb]	-110	0	111
M_{33}	[Lb*ft]	81	-77	85
V_{33}	[Lb]	0	0	0
M_{22}	[Lb*ft]	0	0	0
fb 33	psi	5,058	4,808	5,307
fb 22	psi	0	0	0
fv	psi	196	0	197
fa	psi	203	212	222
ft	psi	0	0	0
Fb33	psi	10,653	10,653	10,653
Fb22	psi	10,653	10,653	10,653
Fa	psi	2,250	2,250	2,250
Fb & Fa	Eq 4.1.1-1	0.53	0.52	0.57
Fb & Fa	Eq 4.1.1-2	0.56	0.55	0.60
Ft & Fb	Eq 4.1.2-1	0.47	0.45	0.50
Fv, Fa, & Fb	Eq 4.4-1	0.32	0.30	0.35

Structural Check sheet Response
Items 5 and 6

Item# 5 - See Photo Above: Wall framing above storefront is approximately 6ft. high, steel studs attached through a steel top-plate to large concrete horizontal members above with imbedded anchors sufficient to hold the load of the wall, storefront and all attachments (signs, awnings etc.). Bottom is connected through a steel bottom-plate to the storefront horizontal members.

Item #6 - Bottom Track Leg is heavy gauge steel sufficient to carry the horizontal loads applied to it by the new awning.

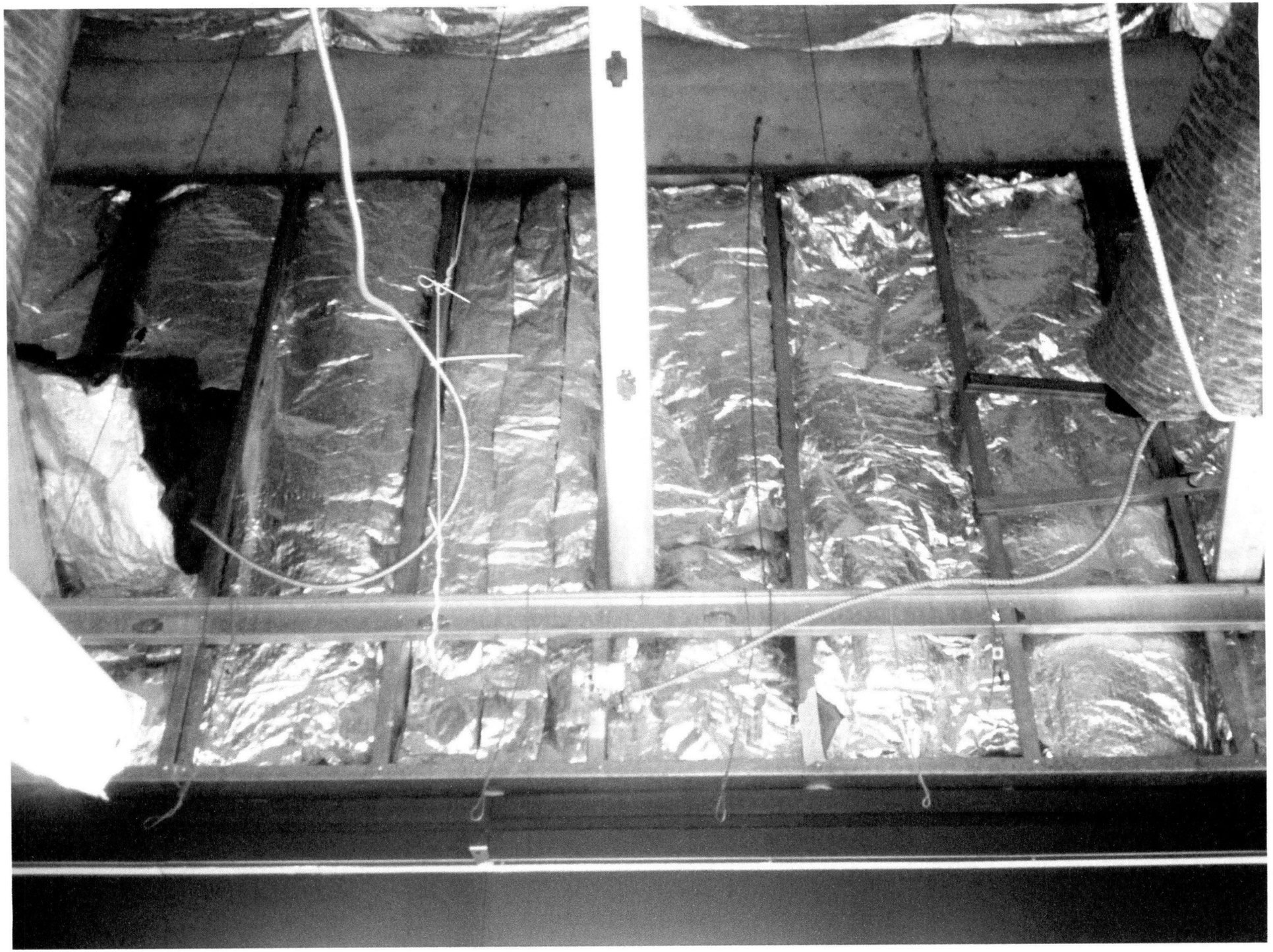

CITY OF PORTLAND, OREGON – BUREAU OF DEVELOPMENT SERVICES

1900 SW Fourth Avenue, Suite 5000 • Portland, Oregon 97201 • www.portlandonline.com/bds

MULTNOMAH COUNTY

STRUCTURAL CHECKSHEET

Application # : **11-174363-000-00-FA**
Review Date : **October 25, 2011**

Facility Permit

To:	APPLICANT	ROBERT VINNACOMBE VINNACOMBE CONSULTING INC 12790 SE BLUFF RD SANDY OR 97055	Work: Home: e-Mail:	503 826-1726 503 - robert@rvconsult.com
From:	BDS Structural Engineer	Lisa Buellesbach	Phone:	503-823-7704
cc:	OWNER	WESTON INVESTMENT CO LLC 2154 NE BROADWAY #200 PORTLAND, OR 97232-1590	Work	(503) 284-9005

PROJECT INFORMATION

Street Address:	1515 SW 5TH AVE
Description of Work:	F5/PR#TWIN-1510A/Twin Star credit Union, T.I. Adding partition walls for credit Union Branch. Adding ATM and other bankin services. Need Appl to send in site Plan so we can establish 1510A as a legal address. Assign addressing. Left message w/appl on phone. 9-7-11

Based on the plans and specifications submitted, the following items appear to be missing or not in conformance with the Oregon Structural Specialty Code and / or other city, state, or federal requirements.

Item #	Location on plans	Code Section	Clarification / Correction Required
1.		OSSC 107.2.1	Structural Plans and Details must be attached to the drawing set. The structural summary indicates that there is one new awning. Sheet A2 indicates there are two new awnings. Clarify. Verify that the awning connections to the existing structure as detailed are adequate at both locations.
2.	B	OSSC 107.2.1	Awning Section references detail E. Detail E is not included in this package. Provide Detail E.
3.	B	OSSC 107.2.1	What do the dashed lines at the bottom of the awning frame indicate? If they are part of the structure, provide member sizes and connection details.
4.	B	OSSC 107.2.1	Show how the aluminum tubes are connected to each other.
5.		OSSC 1604.4	Show the existing wall framing. Show the length of the metal studs that are supporting the awning frame and show how they are connected at the top and bottom. Show that they can support the loads from the awning.
6.	B	OSSC 1604.4	It appears that the bottom horizontal awning support tube is fastened into the bottom track of the stud wall between the vertical studs. Verify that the track leg can carry the horizontal loads applied to it.