(19)

CITY OF PORTLAND, OREGON - BUREAU OF DEVELOPMENT SERVICES

1900 SW Fourth Avenue, Suite 5000 • Portland, Oregon 97201 • www.portlandonline.com/bds • Fax 503-823-7425

2

Facility Permit Plan Intake Form

FOR INTAKE, STAFF USE ONLY

Date Received 8/17/12

Building Registration #

Fixed Bid

Bin #

Building Permit # 12-173881-FA

Mechanical #

Plumbing Permit #

Electrical Permit #

Building/Mechanical SCOTT 2

Electrical

Plumbing

Fire JEFF 3

Planning

BES

PDOT

Structural FRED 1

Other

APPLICANT: Complete all sections below that apply to the project. Please print legibly.

Print Name Jason Simpson Sign Name

Street Address 18008 NE Airport Way

City Portland State OR Zip Code 97230

Day Phone (503) 267-1518 FAX 503-465-0677 email jasons@nwhs.com

Plans / permits available for pick up at 1900 SW 4th Avenue, 2nd floor between 8:00 am to 5:00 pm

Contact Name for plan/permit pick up Same as above

Day Phone email

Project Building Name / # Tomra North America

Project Address or Location 4322 NW Yeon Ave Portland OR 97210

Project Name and Description Racking & Shelving Installation

Total Project Value 19,300.00 Project Reference #/Billing ID #

Building Contractor NorthWest Handling Systems CCB # 65422

MechanicalContractor CCB #

Electrical Contractor CCB# License #

Plumbing Contractor CCB# License #

12-173881-FA

☐ **Building Permit**

No. of Stories

Const. Type

[Y] [N] Alarms Required

[Y] [N] Smoke Det. Req'd

[Y] [N] Sprinklers Req'd

[Y] [N] Struct. Eng / Calcs Submitted

☐ **Mechanical Permit**

Mechanical Valuation

Description

☐ **Electrical Permit**

Please provide a completed standard electrical permit application form. You may mail or deliver it to 1900 SW 4th Avenue, Portland, Oregon 97201 or FAX to 503-823-7425.

☐ **Plumbing Permit**

Number of Fixtures

Back Flow Devices

Water Service (# of Feet)

Medical Gas

Other

City of Portland
REVIEWED FOR CODE COMPLIANCE
AUG 29, 2012
12-173881-FA
Permit Number

Structural Concepts Engineering

1200 N. Jefferson St, Suite F
Anaheim, CA 92807
Tel: 714.632.7330 Fax: 714.632.7763
e-mail: mail@sceinc.net

Project Name : TOMRA NORTH AMERICA

Project Number : M-081512-8

Date : 08/15/12

Street Address : 4322 NW YEON AVE
City/State : PORTLAND, OR 97210

Scope of Work : SHELVING

REGISTERED PROFESSIONAL ENGINEER
72544PE
OREGON
MAR. 11, 2003
ALI ABOLHASSANI
EXPIRATION DATE 12/31/13

AUG 1 5 2012

Structural
Concepts
Engineering
1200 N. Jefferson Ste. Ste F Anaheim, CA 92807 Tel: 714.632.7330 Fax: 714.632.7763

TABLE OF CONTENTS

Title Page	1
Table of Contents	2
Design Data and Definition of Components	3
Critical Configuration	4
Seismic Loads	5 to 6
Column	7
Beam and Connector	8 to 9
Bracing	10
Anchors	11
Base Plate	12
Slab on Grade	13
Other Configurations	14 to 26

Design Data

1) The analyses conforms to the requirements of the 2009 IBC and the 2008 RMI/ANSI MH 16.1 Rack Design Manual Steel Storage Racks (RMI) and the ASCE 7-05, section 15.5.3

2) Transverse braced frame steel conforms to ASTM A570, Gr.55, with minimum strength, Fy=55 ksi
Longitudinal frame beam and connector steel conforms to ASTM A570, Gr.55, with minimum yield, Fy=55 ksi
All other steel conforms to ASTM A36, Gr. 36 with minimum yield, Fy= 36 ksi

3) Anchor bolts shall be provided by installer per ICC reference on plans and calculations herein.

4) All welds shall conform to AWS procedures, utilizing E70xx electrodes or similar. All such welds shall be performed in shop, with no field welding allowed other than those supervised by a licensed deputy inspector.

5) The slab on grade is 5" thick with minimum 2500 psi compressive strength. Soil bearing capacity is 1000 psf.

Definition of Components

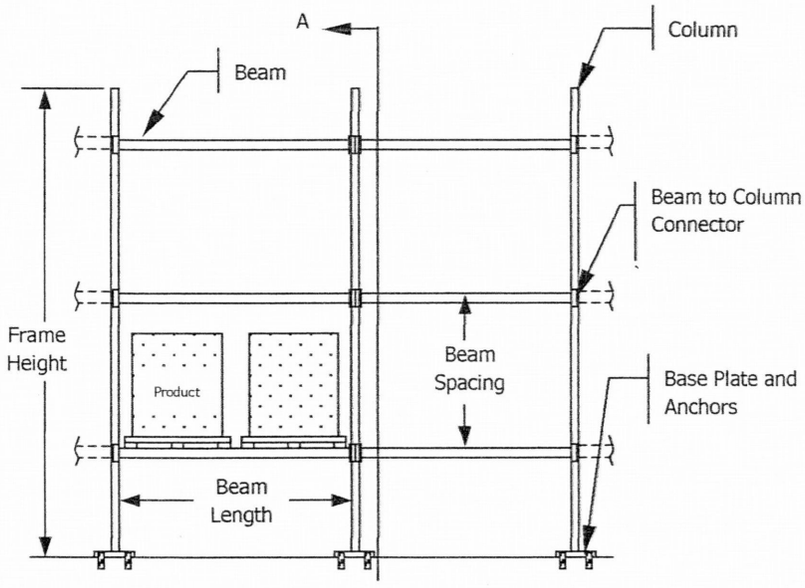

Front View: Down Aisle (Longitudinal) Frame

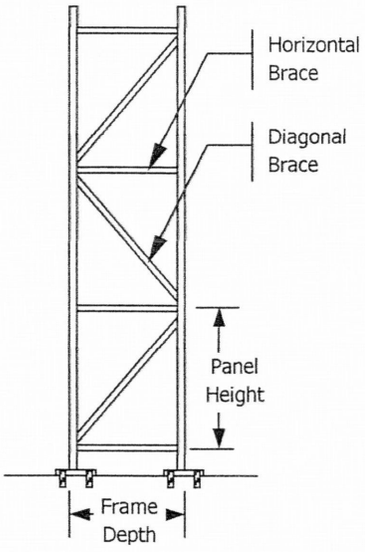

Section A: Cross Aisle (Transverse) Frame

Structural Concepts Engineering
1200 N. Jefferson Ste. Ste F Anaheim, CA 92807 Tel: 714.632.7330 Fax: 714.632.7763

Project #: M-081512-8

By: BOB Project: TOMRA NORTH AMERICA

Configuration & Summary: Type 1 - 4 level Selective Rack

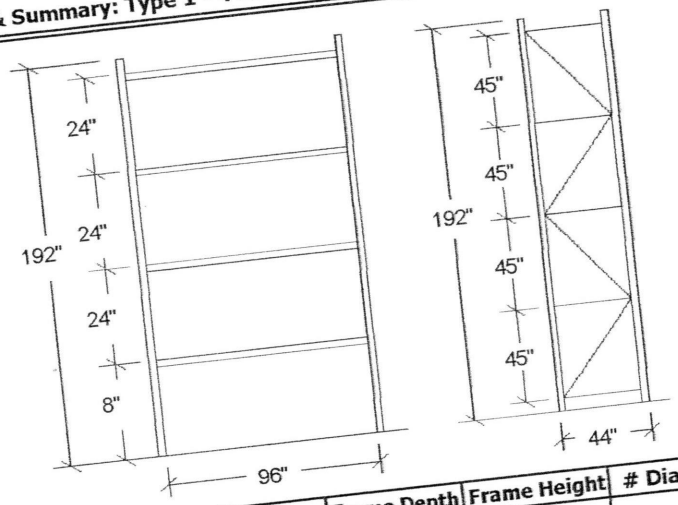

***RACK COLUMN REACTIONS*
ASD LOADS
AXIAL DL= 200 lb
AXIAL LL= 6,800 lb
SEISMIC AXIAL Ps=+/- 1,785 lb
BASE MOMENT= 0 in-lb

Seismic Criteria	# Bm Lvls	Frame Depth	Frame Height	# Diagonals	Beam Length	Frame Type
Ss=0.986, Fa=1.106	4	44 in	192.0 in	4	96 in	Single Row

Component	Description				STRESS
Column	Fy=55 ksi	3x3x13ga	P=7000 lb, M=1053 in-lb		0.32-OK
Column & Backer	None	None	None		N/A
Beam	Fy=55 ksi	LMT LBF416 4-1/8"x16ga Stepbeam	Lu=96 in	Capacity: 4617 lb/pr	0.74-OK
Beam Connector	Fy=55 ksi	Lvl 1: 3 pin OK	Mconn=3892 in-lb	Mcap=15230 in-lb	0.26-OK
Brace-Horizontal	Fy=55 ksi	LMT 1-1/2x1-1/4x14ga			0.32-OK
Brace-Diagonal	Fy=55 ksi	LMT 1-1/2x1-1/4x14ga			0.46-OK
Base Plate	Fy=36 ksi	8 in x 5 in x 0.375 in		Fixity= 0 in-lb	0.94-OK
Anchor	2 per Base	0.5" x 3.25" Embed POWERS SD2 ESR 2502 Inspection Reqd (Net Seismic Uplift=70 lb)			0.133 - OK
Slab & Soil		5" thk x 2500 psi slab on grade. 1000 psf Soil Bearing Pressure			0.72-OK

Level	Load Per Level	Beam Spcg	Brace	Story Force Transv	Story Force Longit.	Column Axial	Column Moment	Conn. Moment	Beam Connector
1	3,400 lb	8.0 in	45.0 in	53 lb	19 lb	7,000 lb	1,053 "#	3,892 "#	3 pin OK
2	3,400 lb	24.0 in	45.0 in	211 lb	77 lb	5,250 lb	2,411 "#	4,230 "#	3 pin OK
3	3,400 lb	24.0 in	45.0 in	369 lb	134 lb	3,500 lb	1,952 "#	3,756 "#	3 pin OK
4	3,400 lb	24.0 in	45.0 in	527 lb	191 lb	1,750 lb	1,148 "#	3,024 "#	3 pin OK

Total: 1,159 lb 421 lb

Notes

8/15/2012

TYPE 1 - TOMRA

Structural Concepts Engineering
1200 N. Jefferson Ste. Ste F Anaheim, CA 92807 Tel: 714.632.7330 Fax: 714.632.7763

By: BOB Project: TOMRA NORTH AMERICA Project #: M-081512-8

Seismic Forces Configuration: Type 1 - 4 level Selective Rack

Lateral analysis is performed with regard to the 2009 IBC Sec. 2208.1, 2008 RMI/ANSI MH 16.1 Sec 2.6 & ASCE 7-05 sec 15.5.3

Ss= 0.986
S1= 0.351
Fa= 1.106
Fv= 1.697
Sds=2/3*Ss*Fa= 0.727
Sd1=2/3*S1*Fv= 0.397
Ca=0.4*2/3*Ss*Fa= 0.2908
(Transverse, Braced Frame Dir.) R= 4.0
Ip= 1.0
PL_{RF1}= 1.0
Pallet Height=hp= 60.0 in
DL per Beam Lvl= 100 lb

Transverse (Cross Aisle) Seismic Load

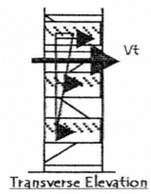

Transverse Elevation

V= Cs*Ip*Ws=Cs*Ip*(0.67*LL*PLrf+DL)

Cs1= [Sds/R] * 0.67 *0.67 factor per RMI commentary Sec 2.1 & Sec 2.1 Limit States Reduction for ASD Loading*
= 0.1218 Cs-max * Ip= 0.1218
Cs2= 0.044*Sds*0.67 V_{min}= 0.015
= 0.0214 Eff Base Shear=Cs= 0.1218
Cs3= [0.5*S1/R] * 0.67 Ws= (0.67*PL_{RF1} * PL)+DL
= 0.0294 = 9,512 lb
Cs-max= 0.1218

Base Shear Coeff=Cs= 0.1218
ASD Format Loads

Vtransv=Vt= 0.1218 * (400 lb + 9112 lb)
EL= 1,159 lb
ASD Level Transverse seismic shear per upright

Level	PRODUC LOAD/LVL,PL	PL*0.67*PLrf	DL	hi	wi*hi	Fi	Fi*(hi+hp/2)
1	3,400 lb	2,278 lb	100 lb	8 in	19,024	52.7 lb	2,003-#
2	3,400 lb	2,278 lb	100 lb	32 in	76,096	210.7 lb	13,063-#
3	3,400 lb	2,278 lb	100 lb	56 in	133,168	368.8 lb	31,717-#
4	3,400 lb	2,278 lb	100 lb	80 in	190,240	526.8 lb	57,948-#
sum:	13,600 lb	9,112 lb	400 lb	W=9512 lb	418,528	1,159 lb	Σ=104,731

Longitudinal (Downaisle) Seismic Load

Similarly for longitudinal seismic loads, using R=6.0 Ws= (0.67 * PL_{RF2} * PL) + DL PL_{RF2}= 1.0
Cs1=Sd1/(T*R)= 0.0443 = 9,512 lb (Longitudinal, Unbraced Dir.) R= 6.0
Cs2= 0.0214 Cs=Cs-max*Ip= 0.0443 T= 1.00 sec
Cs3= 0.0196
Cs-max= 0.0443

Vlong= 0.0443 * (400 lb + 9112 lb)
EL= 421 lb ***ASD Level Longit. seismic shear per upright***

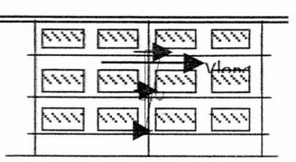

Front View

Level	PRODUC LOAD/LVL,PL	PL*0.67*PLrf	DL	hi	wi*hi	Fi
1	3,400 lb	2,278 lb	100 lb	8 in	19,024	19.1 lb
2	3,400 lb	2,278 lb	100 lb	32 in	76,096	76.5 lb
3	3,400 lb	2,278 lb	100 lb	56 in	133,168	134.0 lb
4	3,400 lb	2,278 lb	100 lb	80 in	190,240	191.4 lb
sum:		9,112 lb	400 lb	W=9512 lb	418,528	421 lb

Structural Concepts Engineering
1200 N. Jefferson Ste. Ste F Anaheim, CA 92807 Tel: 714.632.7330 Fax: 714.632.7763

Downaisle Seismic Loads Configuration: Type 1 - 4 level Selective Rack

Determine the story moments by applying portal analysis. The base plate is assumed to provide no fixity.

Seismic Story Forces

Vlong= 421 lb
Vcol=Vlong/2= 211 lb
F1= 19 lb
F2= 77 lb
F3= 134 lb

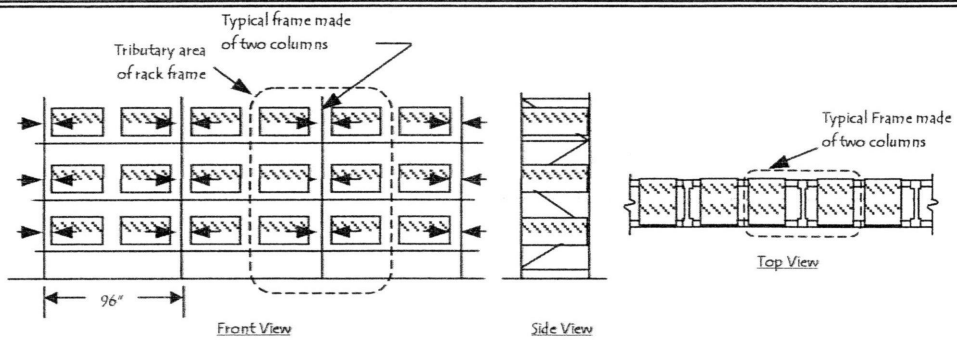

Conceptual System

Seismic Story Moments

Mbase-max= 0 in-lb *<=== Default capacity*
Mbase-v= (Vcol*h1eff)/2
= 526 in-lb *<=== Moment going to base*
Mbase-eff= Minimum of Mbase-max and Mbase-v
= 0 in-lb *PINNED BASE ASSUMED*
M 1-1= [Vcol * h1eff]-Mbase-eff
= (211 lb * 5 in)-0 in-lb
= 1,053 in-lb

h1-eff= h1 - beam clip height/2
= 5 in

M 2-2= [Vcol-(F1)/2] * h2
= [211 lb - 38.3 lb]*24 in/2
= 2,411 in-lb

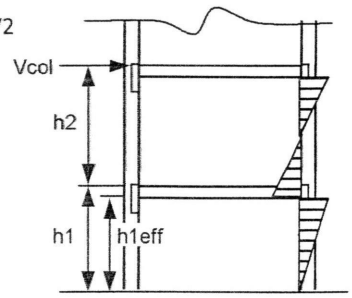

Beam to Column Elevation

Mseis= (Mupper+Mlower)/2

Mseis(1-1)= (1053 in-lb + 2411 in-lb)/2
= 1,732 in-lb

Mseis(2-2)= (2411 in-lb + 1952 in-lb)/2
= 2,182 in-lb

Summary of Forces

LEVEL	hi	Axial Load	Column Moment	Mseismic	Mend-fixity	Mconn**	Beam Connector
1	8 in	7,000 lb	1,053 in-lb	1,732 in-lb	3,458 in-lb	3,892 in-lb	3 pin OK
2	24 in	5,250 lb	2,411 in-lb	2,182 in-lb	3,458 in-lb	4,230 in-lb	3 pin OK
3	24 in	3,500 lb	1,952 in-lb	1,550 in-lb	3,458 in-lb	3,756 in-lb	3 pin OK
4	24 in	1,750 lb	1,148 in-lb	574 in-lb	3,458 in-lb	3,024 in-lb	3 pin OK

Mconn= (Mseismic + Mend-fixity)*0.75
Mconn-allow(3 Pin)= 15,230 in-lb

Structural Concepts Engineering
1200 N. Jefferson Ste. Ste F Anaheim, CA 92807 Tel: 714.632.7330 Fax: 714.632.7763

By: BOB **Project:** TOMRA NORTH AMERICA **Project #:** M-081512-8

Column Configuration: Type 1 - 4 level Selective Rack

Conforms to the requirements of Chapter C5 of the AISI Cold Formed Steel Design Manual for combined bending and axial loads.

Section Properties

Section: 3x3x13ga

Aeff = 0.757 in^2	Iy = 0.871 in^4	Kx = 1.7
Ix = 1.320 in^4	Sy = 0.574 in^3	Lx = 5.9 in
Sx = 0.879 in^3	ry = 1.080 in	Ky = 1.0
rx = 1.320 in	Fy= 55 ksi	Ly = 45.0 in
Ωf= 1.67	Cmx= 0.85	Cb= 1.0
E= 29,500 ksi		

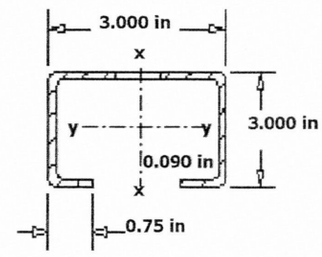

Loads **Considers loads at level 1**

*Critical load case RMI Sec 2.1, item 4: (1+0.11Sds)DL + (1+0.14SDS)PL*0.75+EL*0.75 <= 1.0, ASD Method*

COLUMN DL= 200 lb
COLUMN PL= 6,800 lb
Mcol= 1,052 in-lb
0.11Sds= 0.07997
0.14Sds= 0.10178

Axial Load=P= (1.07997*200 lb)+(1.10178*6800 lb*0.75)
= 5,835 lb

Moment=Mx= Mcol*0.75
= 1052 in-lb * 0.75
= 789 in-lb

Axial Analysis

KxLx/rx = 1.7*5.94"/1.3196"
= 7.7

KyLy/ry = 1*45"/1.08"
= 41.7

Fe > Fy/2
Fn= Fy(1-Fy/4Fe)
= 55 ksi*[1-55 ksi/(4*167.7 ksi)]
= 50.5 ksi

Fe= π^2E/(KL/r)max^2
= 167.7ksi

Fy/2= 27.5 ksi

Pa= Pn/Ωc
= 38221 lb/1.92
= 19,907 lb

Pn= Aeff*Fn
= 38,221 lb

Ωc= 1.92

P/Pa= 0.29 > 0.15

Bending Analysis

Check: P/Pa + (Cmx*Mx)/(Max*μx) ≤ 1.0
P/Pao + Mx/Max ≤ 1.0

Pno= Ae*Fy
= 0.757 in^2 *55000 psi
= 41,635 lb

Pao= Pno/Ωc
= 41635lb/1.92
= 21,685 lb

Myield=My= Sx*Fy
= 0.879 in^3 * 55000 psi
= 48,345 in-lb

Max= My/Ωf
= 48345 in-lb/1.67
= 28,949 in-lb

Pcr= π^2EI/(KL)max^2
= π^2*29500000 psi/(1*45 in)^2
= 125,232 lb

μx= {1/[1-(Ωc*P/Pcr)]}^-1
= {1/[1-(1.92*5835 lb/125232 lb)]}^-1
= 0.91

Combined Stresses

(5835 lb/19907 lb) + (0.85*789 in-lb)/(28949 in-lb*0.91) =	0.32	< 1.0, OK	(EQ C5-1)
(5835 lb/21685 lb) + (789 in-lb/28949 in-lb) =	0.30	< 1.0, OK	(EQ C5-2)

Structural Concepts Engineering
1200 N. Jefferson Ste. Ste F Anaheim, CA 92807 Tel: 714.632.7330 Fax: 714.632.7763

By: BOB **Project: TOMRA NORTH AMERICA** **Project #: M-081512-8**

Beam Configuration: Type 1 - 4 level Selective Rack

The beam to column connection is assumed to provide partial end fixity for the beam frame. The end moment calculated herein is added to the lateral force force portal moment when analyzing the connection capacity.
The impact load on the beam is addressed by including the Impact Factor "a" in the determination of the beam center bending stress.

Section Properties

Beam Member= LMT LBF416 4-1/8"x16ga Stepbeam

Beam at Level= 1
Beam Type= Formed
Ix= 1.815 in^4
Sx= 0.804 in^3
Length=L= 96.0 in
Lu= 96.0 in

Beam Weight= 4.0 lb/ft
Thickness= 0.060 in
Beam Shape= Step

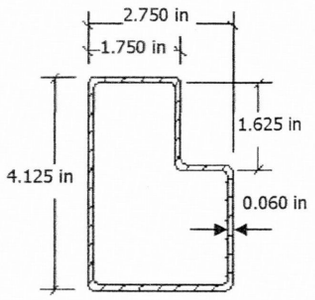

Impact Factor (a)=[1-(25%/2)]= 0.875

Loads

Load Case considered is DL + 100% Product Load + Full Impact Load (More conservative than RMI Sec 2.1, item 5)

% End Fixity= 25 %
Ø = 0.25
Mcenter= ß*(wL^2/8)
= 0.832*(wL^2/8)
Mends= Ø*Mmax(fixed ends)
= (wL^2/12)*0.25
= 0.0208*wL^2

Coeff ß= 0.104/0.125
= 0.832
Mcenter= Mcenter(simple ends) - Ø*Mcenter(fixed ends)
= wL^2/8 - (0.25 * wL^2/12)
= wL^2/8 - wL^2/48
= 0.104 * wL^2

Fy= 55,000 psi

Fb= 0.6 * Fy
= 33,000 psi

Fb-eff= 33,000 psi

Live Load/Pair= 3,400 lb

Dead Load/Pair= (4 lb/ft) * 2 * 96 in/12
= 64 lb

Dist Load=w= 18.0 lb/in

Mcenter= 0.104 * wL^2
= 17,292 in-lb

Mends= 0.0208*wL^2
= 3,458 in-lb

Bending

M= 17,292 in-lb
fb= (M/Sx)/a
= 24,580 psi

fb/Fb= 24580 psi/33000 psi
= 0.74 <= 1.0, OK

Bending Capcity= 4,617 lb/pair **<=== Critical**

Deflection

Defl-allow=L/ 180
= 0.534 in

Defl= ß * [5wL^4/(384*E*Ix)]
= [5*18 lb/in*(96 in)^4/(384*29.5x10^6 psi * 1.815 in^4)]*0.832
= 0.309 in <= 0.534 in, OK

Deflection Capacity= 5,922 lb/Pair

Allowable load per beam pair= 4,617 lb

Structural Concepts Engineering
1200 N. Jefferson Ste, Ste F Anaheim, CA 92807 Tel: 714.632.7330 Fax: 714.632.7763

3 Pin Beam to Column Connection Type 1 - 4 level Selective Rack

The beam end moments shown herein show the result of the maximum induced fixed end moments form seismic + static loads and the code mandated minimum value of 1.5%(DL+PL)

Mconn max= (Mseismic + Mend-fixity)*0.75
= 3,892 in-lb Load at level 1

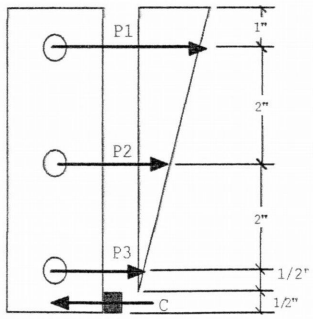

Connector Type= 3 Pin

Shear Capacity of Pin

Pin Diam= 0.44 in Fy= 55,000 psi

Ashear= (0.438 in)^2 * Pi/4
= 0.1507 in^2

Pshear= 0.4 * Fy * Ashear
= 0.4 * 55000 psi * 0.1507in^2
= 3,315 lb

Bearing Capacity of Pin

tcol= 0.090 in Fu= 65,000 psi

Omega= 2.22 a= 2.22

Pbearing= alpha * Fu * diam * tcol/Omega
= 2.22 * 65000 psi * 0.438 in * 0.09 in/2.22
= 2,562 lb < 3315 lb

Moment Capacity of Bracket

Edge Distance=E= 1.00 in Pin Spacing= 2.0 in Fy= 55,000 psi

C= P1+P2+P3 tclip= 0.18 in Sclip= 0.127 in^3
= P1+P1*(2.5"/4.5")+P1*(0.5"/4.5")
= 1.667 * P1

Mcap= Sclip * Fbending C*d= Mcap = 1.667 d= E/2
= 0.127 in^3 * 0.66 * Fy = 0.50 in
= 4,610 in-lb

Pclip= Mcap/(1.667 * d)
= 4610.1 in-lb/(1.667 * 0.5 in) Thus, P1= 2,562 lb
= 5,531 lb

Mconn-allow= [P1*4.5"+P1*(2.5"/4.5")*2.5"+P1*(0.5"/4.5")*0.5"]
= 2562 LB*[4.5"+(2.5"/4.5")*2.5"+ (0.5"/4.5")*0.5"]
= 15,230 in-lb > Mconn max, OK

Structural Concepts Engineering
1200 N. Jefferson Ste. Ste F Anaheim, CA 92807 Tel: 714.632.7330 Fax: 714.632.7763

Transverse Brace Configuration: Type 1 - 4 level Selective Rack

Section Properties

Diagonal Member= LMT 1-1/2x1-1/4x14ga
Area= 0.278 in^2
r min= 0.405 in
Fy= 55,000 psi
K= 1.0
Ωc= 1.92

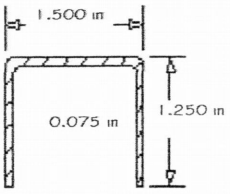

Horizontal Member= LMT 1-1/2x1-1/4x14ga
Area= 0.278 in^2
r min= 0.405 in
Fy= 55,000 psi
K= 1.0

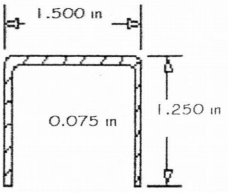

Frame Dimensions

Bottom Panel Height=H= 45.0 in
Frame Depth=D= 44.0 in
Column Width=B= 3.0 in
Clear Depth=D-B*2= 38.0 in
X Brace= NO

Diagonal Member

*Critical load case RMI Sec 2.1, item 4: (1+0.11Sds)DL + (1+0.14SDS)PL*0.75+EL*0.75 <= 1.0, ASD Method, DL=PL=0 for upright brace members*

Vb=Vtransv= 1,159 lb

Ldiag= [(D-B*2)^2 + (H-6")^2]^1/2
= 54.5 in
Pmax= V*(Ldiag/D) * 0.75
= 1,077 lb

(kl/r)= (k * Ldiag)/r min
= (1 x 54.5 in /0.405 in)
= 134.6 in
Fe= pi^2*E/(kl/r)^2
= 16,071 psi

SINCE Fe<Fy/2,

Fn= Fe
= 16,071 psi

Pn= AREA*Fn
= 0.278 in^2 * 16071 psi
= 4,468 lb

Pallow= Pn/Ω
= 4468 lb /1.92
= 2,327 lb

Pn/Pallow= 0.46 <= 1.0 OK

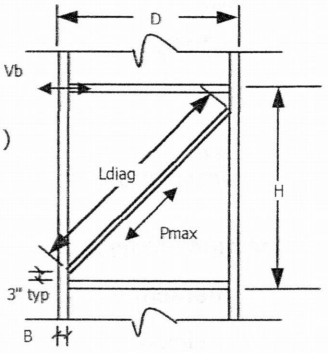

Typical Panel Configuration

Check End Weld
Lweld= 2.5 in
Fu= 65 ksi
tmin= 0.075 in
Weld Capacity= 0.75 * tmin * L * Fu/2.5
= 3,656 lb OK

Horizontal brace

Pmax=V= 869 lb

(kl/r)= (k * Lhoriz)/r min
= (1 x 44 in) /0.405 in
= 108.6 in

Fe= pi^2*E/(kl/r)^2
= 24,687 psi

Fy/2= 27,500 psi

Since Fe<Fy/2, Fn=Fe
= 24,687 psi

Pn= AREA*Fn
= 0.278in^2*24687 psi
= 6,863 lb

Pallow= Pn/Ωc
= 6863 lb /1.92
= 3,574 lb

Pn/Pallow= 0.32 <= 1.0 OK

Structural Concepts Engineering
1200 N. Jefferson Ste. Ste F Anaheim, CA 92807 Tel: 714.632.7330 Fax: 714.632.7763

By: BOB | Project: TOMRA NORTH AMERICA | Project #: M-081512-8

Single Row Frame Overturning | Configuration: Type 1 - 4 level Selective Rack

Loads

Load case per RMI Sec 2.1, item 3: (0.6-0.11Sds)DL + (0.6-0.14Sds)PLapp*0.75 - EL*0.75

Vtrans=V= 1,159 lb

DEAD LOAD PER UPRIGHT=DL= 400 lb
PL PER UPRIGHT=PL= 13,600 lb
PLapp=PL*0.67= 9,112 lb
Wst=(0.52003*DL+0.49822*PLapp*0.75)= 3,612 lb
PL @ TOP= 3,400 lb
DL/Lvl= 100 lb

Σ(Fi*hi)= 104,731 in-lb
Total Dead Load per Bay=DL= 400 lb

(0.6-0.11Sds)= 0.5200
(0.6-0.14Sds)= 0.4982

Frame Depth=D= 44.0 in
Htop-lvl=H= 80.0 in
# Levels= 4
# Anchors/Base= 2
h= 110.0 in
hp= 60.0 in

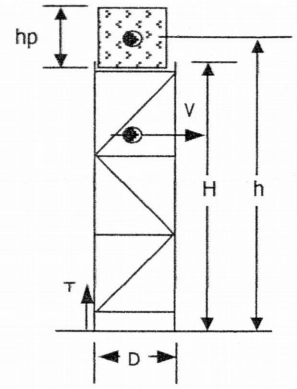

SIDE ELEVATION

Load Case 1: Fully Loaded rack

Vtrans= 1,159 lb

Movt= Σ(Fi*hi)*0.75
= 78,548 in-lb

Mst= Wst * D/2
= 3612 lb * 44 in/2
= 79,464 in-lb

T= (Movt-Mst)/D
= (78548 in-lb - 79464 in-lb)/44 in
= -21 lb **No Uplift**
Net Uplift per column

Load Case 2: Top Level Loaded Only

Critical Level= 4

h= 110.0 in

V1=Vtop= Cs * Ip * Ws
= 0.1218 * (3400 lb)
= 414 lb
V2=V_{DL}= Cs*Ip*DL
= 48 lb
Mst= (0.52003*DL+0.49822*PL*0.75) * D/2
= (100 lb*4 * 0.52003 + 3400 lb*0.49822*0.75)*44 in/2
= 32,526 in-lb

Pinned Base

Movt= [V1*h + V2 * H/2]*0.75
= [414 lb*110 in +48 lb*80 in/2]*0.75
= 35,595 in-lb

T= (Movt-Mst)/D
= (35595 in-lb - 32526 in-lb)/44 in
= 70 lb
Net Uplift per column

Anchor

Check (2) 0.5" x 3.25" Embed POWERS SD2 anchor(s) per base plate.
Special inspection is required per ESR 2502.

Pullout Capacity=Tcap= 1,070 lb
Shear Capacity=Vcap= 1,840 lb

L.A. City Jurisdiction? NO
Phi= 1

Tcap*Phi= 1,070 lb
Vcap*Phi= 1,840 lb

Fully Loaded:
(290 lb/1840 lb)^1 = 0.16 <= 1.2 OK

Top Level Loaded:
(35 lb/1070 lb)^1 + (104 lb/1840 lb)^1 = 0.09 <= 1.2 OK

Structural Concepts Engineering
1200 N. Jefferson Ste. Ste F Anaheim, CA 92807 Tel: 714.632.7330 Fax: 714.632.7763

By: BOB | Project: TOMRA NORTH AMERICA | Project #: M-081512-8

Base Plate Configuration: Type 1 - 4 level Selective Rack

Section

Baseplate= *8 in x 5 in x 0.375 in*
Eff Width=W = 8.00 in — a = 3.00 in
Eff Depth=D = 5.00 in — Anchor c.c. =2*a=d = 6.00 in
Column Width=b = 3.00 in — N=# Anchor/Base= 2
Column Depth=dc = 3.00 in — Fy = 36,000 psi
L = 2.50 in
Plate Thickness=t = 0.375 in

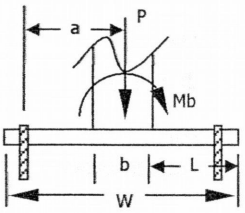

Downaisle Elevation

Down Aisle Loads *Critical load case RMI Sec 2.1, item 4: (1+0.11Sds)DL + (1+0.14SDS)PL*0.75+EL*0.75 <= 1.0, ASD Method*

COLUMN DL= 200 lb
COLUMN PL= 6,800 lb — **Axial=P= (1.07997*200 lb)+(1.10178*6800 lb*0.75)** — **Mb= Base Moment*0.75**
Base Moment= 0 in-lb — **= 5,835 lb** — **= 0 in-lb * 0.75**
0.11Sds= 0.07997 — **= 0 in-lb**
0.14Sds= 0.10178 — **Axial Load P = 5,835 lb** — **Mbase=Mb = 0 in-lb**

Effec.
Effec. I

Axial stress=fa = P/A = P/(D*W)
= 146 psi
Moment Stress=fb = M/S = 6*Mb/[(D*B^2]
= 0.0 psi
Moment Stress=fb1 = fb-fb2
= 0.0 psi
M3 = (1/2)*fb2*L*(2/3)*L = (1/3)*fb2*L^2
= 0 in-lb
S-plate = (1)(t^2)/6
= 0.023 in^3/in
fb/Fb = Mtotal/[(S-plate)(Fb)]
= **0.72** **OK**
Tanchor = (Mb-(PLapp*0.75*0.46)(a))/[(d)*N/2]
= -1,806 lb No Tension

M1= wL^2/2= fa*L^2/2
= 456 in-lb
Moment Stress=fb2 = 2 * fb * L/W
= 0.0 psi
M2= fb1*L^2)/2
= 0 in-lb
Mtotal = M1+M2+M3
= 456 in-lb/in
Fb = 0.75*Fy
= 27,000 psi
F'p= 0.7*F'c
= 1,750 psi OK
Tallow= 1,070 lb **OK**

P

Cross Aisle Loads *Critical load case RMI Sec 2.1, item 4: (1+0.11Sds)DL + (1+0.14SDS)PL*0.75+EL*0.75 <= 1.0, ASD Method*

Pstatic= 5,835 lb

Movt*0.75= 78,548 in-lb — Pseismic= Movt/Frame Depth
Frame Depth= 44.0 in — = 1,785 lb
P=Pstatic+Pseismic= 7,620 lb
b =Column Depth= 3.00 in

L =Base Plate Depth-Col Depth= 2.50 in

fa = P/A = P/(D*W)
= *191 psi*
M= wL^2/2= fa*L^2/2
= *595 in-lb/in*

Sbase/in = (1)(t^2)/6
= 0.023 in^3/in
Fbase = 0.75*Fy
= 27,000 psi

fb/Fb = M/[(S-plate)(Fb)]
= **0.94** **OK**

Check uplift load on Baseplate

Check uplift forces on baseplate with 2 or more anchors per RMI 7.2.2.
"When the base plate configuration consists of two anchor bolts located on either side of the column and a net uplift force exists, the minimum base plate thickness **shall be determined based on a design bending moment in the plate equal** to the uplift force on one anchor times 1/2 the distance from the centerline of the anchor to the nearest edge of the rack column"

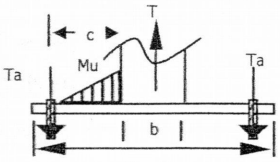

Elevation

Uplift per Column= 70 lb
Qty Anchor per BP= 2
Net Tension per anchor=Ta= 35 lb
c= 2.50 in
Mu=Moment on Baseplate due to uplift= Ta*c/2
= 44 in-lb
Splate= 0.117 in^3
[fb/Fb]*0.75= 0.01 **OK**

Structural Concepts Engineering
1200 N. Jefferson Ste. Ste F Anaheim, CA 92807 Tel: 714.632.7330 Fax: 714.632.7763

By: BOB | Project: TOMRA NORTH AMERICA | Project #: M-081512-8

Slab on Grade Configuration: Type 1 - 4 level Selective Rack

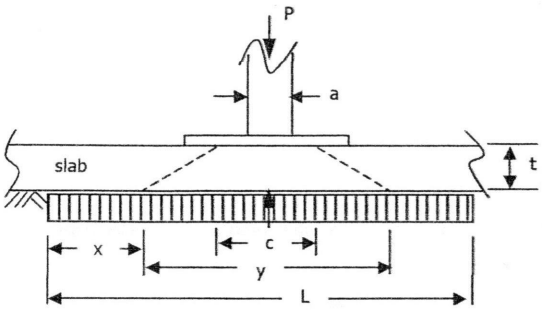

SLAB ELEVATION

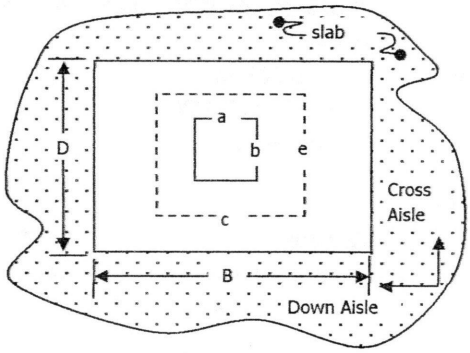

Baseplate Plan View

Concrete
f'c= 2,500 psi
tslab=t= 5.0 in
teff= 5.0 in
phi=Ø= 0.6

Soil
fsoil= 1,000 psf
Movt= 78,548 in-lb
Frame depth= 44.0 in
Sds= 0.727
0.2*Sds= 0.145

Base Plate
Effec. Baseplate width=B= 8.00 in
Effec. Baseplate Depth=D= 5.00 in
width=a= 3.00 in
depth=b= 3.00 in
midway dist face of column to edge of plate=c= 5.50 in
midway dist face of column to edge of plate=e= 4.00 in

Column Loads

DEAD LOAD=DL= 200 lb per column
unfactored ASD load
PRODUCT LOAD=PL= 6,800 lb per column
unfactored ASD load
P-seismic=EL= (Movt/Frame depth)
= 1,785 lb per column
unfactored ASD load

Load Case 1) (1.2+0.2Sds*DL) + (0.85+0.2Sds*PL) + 1.5*EL RMI SEC 2.2 EQTN 5
= 1.3454*200 lb + 0.9954*6800 lb + 1.5*1785 lb
= 9,715 lb
Load Case 2) (0.9-0.2Sds)DL + (0.9-0.2Sds)*PLapp + 1.5EL RMI SEC 2.2 EQTN 6
= (0.7546*200 lb) + (0.7546*4556 lb) + (1.5*1785 lb)
= 6,266 lb
Load Case 3) 1.2*DL + 1.4*PL RMI SEC 2.2 EQTN 2
= 1.2*200 lb + 1.4*6800 lb
= 9,760 lb

Effective Column Load=Pu= 9,760 lb per column

Puncture

Apunct= [(c+t)+(e+t)]*2*t
= 195.0 in^2

Fpunct= 2.66*phi*sqrt(f'c)
= 79.8 psi
fv/Fv= Pu/(Apunct*Fpunct)
= **0.627** **< 1 OK**

Slab Bending

Pse=DL+PL+E= 9,760 lb

Asoil= (Pse*144)/(fsoil)
= 1,405 in^2
x= (L-y)/2
= 11.4 in
Fb= 5*(phi)*(f'c)^0.5
= 150. psi

L= (Asoil)^0.5
= 37.48 in
M= w*x^2/2
= (fsoil*x^2)/(144*2)
= 451.0 in-lb

y= (c*e)^0.5 + 2*t
= 14.7 in
S-slab= 1*teff^2/6
= 4.17 in^3
fb/Fb= M/(S-slab*Fb)
= **0.722** **< 1, OK**

Structural Concepts Engineering
1200 N. Jefferson Ste. Ste F Anaheim, CA 92807 Tel: 714.632.7330 Fax: 714.632.7763

By: BOB Project: TOMRA NORTH AMERICA Project #: M-081512-8

Configuration & Summary: Type 2 - 6 level Selective Rack

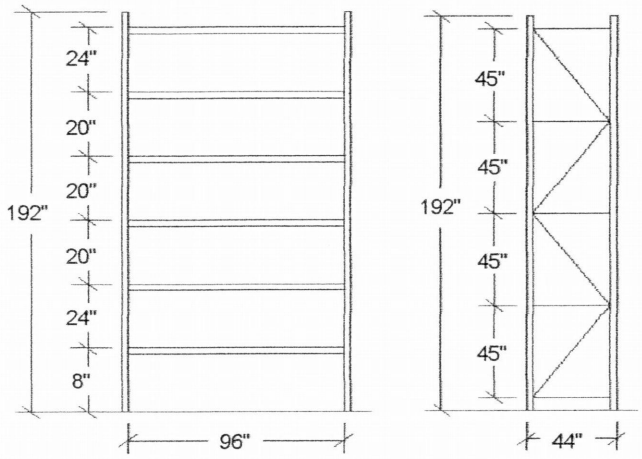

***RACK COLUMN REACTIONS*
ASD LOADS
AXIAL DL= 300 lb
AXIAL LL= 6,000 lb
SEISMIC AXIAL Ps=+/- 2,027 lb
BASE MOMENT= 0 in-lb

Seismic Criteria	# Bm Lvls	Frame Depth	Frame Height	# Diagonals	Beam Length	Frame Type
Ss=0.986, Fa=1.106	6	44 in	192.0 in	4	96 in	Single Row

Component	Description					STRESS
Column	Fy=55 ksi	3x3x13ga		P=6300 lb, M=958 in-lb		0.29-OK
Column & Backer	None	None		None		N/A
Beam	Fy=55 ksi	LMT LBF416 4-1/8"x16ga Stepbeam		Lu=96 in	Capacity: 4627 lb/pr	0.43-OK
Beam Connector	Fy=55 ksi	Lvl 1: 3 pin OK	Mconn=2748 in-lb		Mcap=15230 in-lb	0.18-OK
Brace-Horizontal	Fy=55 ksi	LMT 1-1/2x1-1/4x14ga				0.29-OK
Brace-Diagonal	Fy=55 ksi	LMT 1-1/2x1-1/4x14ga				0.42-OK
Base Plate	Fy=36 ksi	8 in x 5 in x 0.375 in			Fixity= 0 in-lb	0.9-OK
Anchor	2 per Base	0.5" x 3.25" Embed POWERS SD2 ESR 2502 Inspection Reqd (Net Seismic Uplift=369 lb)				0.267 - OK
Slab & Soil	5" thk x 2500 psi slab on grade. 1000 psf Soil Bearing Pressure					0.68-OK

Level	Load Per Level	Beam Spcg	Brace	Story Force Transv	Story Force Longit.	Column Axial	Column Moment	Conn. Moment	Beam Connector
1	2,000 lb	8.0 in	45.0 in	23 lb	8 lb	6,300 lb	958 "#	2,748 "#	3 pin OK
2	2,000 lb	24.0 in	45.0 in	91 lb	33 lb	5,250 lb	2,249 "#	3,030 "#	3 pin OK
3	2,000 lb	20.0 in	45.0 in	147 lb	54 lb	4,200 lb	1,710 "#	2,728 "#	3 pin OK
4	2,000 lb	20.0 in	45.0 in	204 lb	74 lb	3,150 lb	1,442 "#	2,488 "#	3 pin OK
5	2,000 lb	20.0 in		260 lb	95 lb	2,100 lb	1,072 "#	2,217 "#	3 pin OK
6	2,000 lb	24.0 in		328 lb	119 lb	1,050 lb	718 "#	1,815 "#	3 pin OK
			Total:	1,052 lb	383 lb				

Notes

Structural Concepts Engineering
1200 N. Jefferson Ste. Ste F Anaheim, CA 92807 Tel: 714.632.7330 Fax: 714.632.7763

By: BOB | Project: TOMRA NORTH AMERICA | Project #: M-081512-8

Configuration & Summary: Type 3 - 6 level Selective Rack

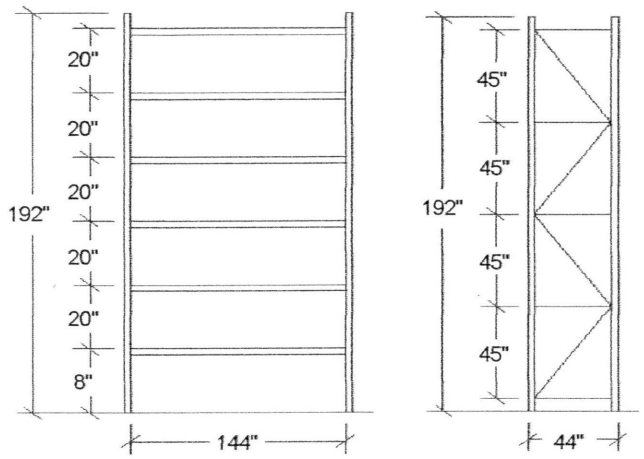

***RACK COLUMN REACTIONS*
ASD LOADS
AXIAL DL= 300 lb
AXIAL LL= 6,600 lb
SEISMIC AXIAL Ps=+/- 2,119 lb
BASE MOMENT= 0 in-lb

Seismic Criteria	# Bm Lvls	Frame Depth	Frame Height	# Diagonals	Beam Length	Frame Type
Ss=0.986, Fa=1.106	6	44 in	192.0 in	4	144 in	Single Row

Component	Description					STRESS
Column	Fy=55 ksi	3x3x13ga		P=6900 lb, M=1045 in-lb		0.32-OK
Column & Backer	None	None		None		N/A
Beam	Fy=55 ksi	LMT LBF614 6-1/8"x14ga Stepbeam		Lu=144 in	Capacity: 6282 lb/pr	0.35-OK
Beam Connector	Fy=55 ksi	Lvl 1: 3 pin OK	Mconn=2187 in-lb		Mcap=15230 in-lb	0.14-OK
Brace-Horizontal	Fy=55 ksi	LMT 1-1/2x1-1/4x14ga				0.32-OK
Brace-Diagonal	Fy=55 ksi	LMT 1-1/2x1-1/4x14ga				0.46-OK
Base Plate	Fy=36 ksi	8 in x 5 in x 0.375 in			Fixity= 0 in-lb	0.97-OK
Anchor	2 per Base	0.5" x 3.25" Embed POWERS SD2 ESR 2502 Inspection Reqd (Net Seismic Uplift=311 lb)				0.25 - OK
Slab & Soil	5" thk x 2500 psi slab on grade. 1000 psf Soil Bearing Pressure					0.77-OK

Level	Load Per Level	Beam Spcg	Brace	Story Force Transv	Story Force Longit.	Column Axial	Column Moment	Conn. Moment	Beam Connector
1	2,200 lb	8.0 in	45.0 in	26 lb	10 lb	6,900 lb	1,045 "#	2,187 "#	3 pin OK
2	2,200 lb	20.0 in	45.0 in	93 lb	34 lb	5,750 lb	2,042 "#	2,498 "#	3 pin OK
3	2,200 lb	20.0 in	45.0 in	159 lb	58 lb	4,600 lb	1,874 "#	2,326 "#	3 pin OK
4	2,200 lb	20.0 in	45.0 in	225 lb	82 lb	3,450 lb	1,586 "#	2,065 "#	3 pin OK
5	2,200 lb	20.0 in		291 lb	106 lb	2,300 lb	1,177 "#	1,714 "#	3 pin OK
6	2,200 lb	20.0 in		357 lb	130 lb	1,150 lb	649 "#	1,272 "#	3 pin OK
			Total:	1,150 lb	418 lb				

Notes

Structural Concepts Engineering
1200 N. Jefferson Ste. Ste F Anaheim, CA 92807 Tel: 714.632.7330 Fax: 714.632.7763

By: BOB Project: TOMRA NORTH AMERICA Project #: M-081512-8

Configuration & Summary: Type 4 - 5 level Selective Rack

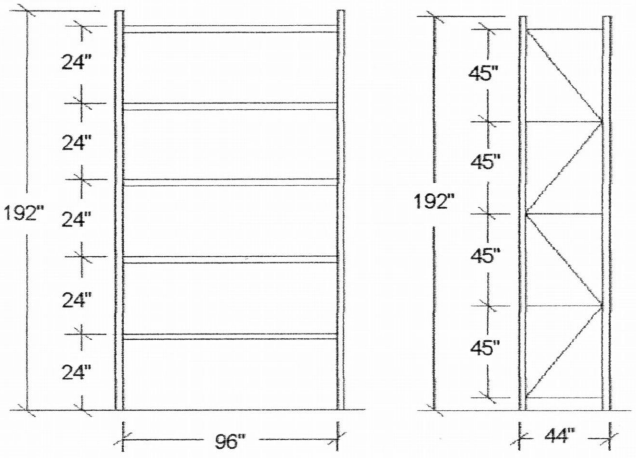

***RACK COLUMN REACTIONS*
ASD LOADS
AXIAL DL= 250 lb
AXIAL LL= 6,000 lb
SEISMIC AXIAL Ps=+/- 2,091 lb
BASE MOMENT= 0 in-lb

Seismic Criteria	# Bm Lvls	Frame Depth	Frame Height	# Diagonals	Beam Length	Frame Type
Ss=0.986, Fa=1.106	5	44 in	192.0 in	4	96 in	Single Row

Component	Description				STRESS
Column	Fy=55 ksi	3x3x13ga	P=6250 lb, M=3969 in-lb		0.36-OK
Column & Backer	None	None	None		N/A
Beam	Fy=55 ksi	LMT LBF416 4-1/8"x16ga Stepbeam	Lu=96 in	Capacity: 4585 lb/pr	0.52-OK
Beam Connector	Fy=55 ksi	Lvl 1: 3 pin OK	Mconn=4127 in-lb	Mcap=15230 in-lb	0.27-OK
Brace-Horizontal	Fy=55 ksi	LMT 1-1/2x1-1/4x14ga			0.29-OK
Brace-Diagonal	Fy=55 ksi	LMT 1-1/2x1-1/4x14ga			0.42-OK
Base Plate	Fy=36 ksi	8 in x 5 in x 0.375 in		Fixity= 0 in-lb	0.9-OK
Anchor	2 per Base	0.5" x 3.25" Embed POWERS SD2 ESR 2502 Inspection Reqd (Net Seismic Uplift=460 lb)			0.3 - OK
Slab & Soil	5" thk x 2500 psi slab on grade. 1000 psf Soil Bearing Pressure				0.68-OK

Level	Load Per Level	Beam Spcg	Brace	Story Force Transv	Story Force Longit.	Column Axial	Column Moment	Conn. Moment	Beam Connector
1	2,400 lb	24.0 in	45.0 in	69 lb	25 lb	6,250 lb	3,969 "#	4,127 "#	3 pin OK
2	2,400 lb	24.0 in	45.0 in	139 lb	50 lb	5,000 lb	2,117 "#	3,319 "#	3 pin OK
3	2,400 lb	24.0 in	45.0 in	208 lb	76 lb	3,750 lb	1,814 "#	3,036 "#	3 pin OK
4	2,400 lb	24.0 in	45.0 in	277 lb	101 lb	2,500 lb	1,361 "#	2,639 "#	3 pin OK
5	2,400 lb	24.0 in		347 lb	126 lb	1,250 lb	756 "#	2,129 "#	3 pin OK
			Total:	1,040 lb	378 lb				

Notes

Structural
Concepts
Engineering
1200 N. Jefferson Ste, Ste F Anaheim, CA 92807 Tel: 714.632.7330 Fax: 714.632.7763

LIGHT DUTY SHELVING ANALYSIS

Structural Concepts Engineering
1200 N. Jefferson Ste. Ste F Anaheim, CA 92807 Tel: 714.632.7330 Fax: 714.632.7763

By: S.P. **Project:** TOMRA NORTH AMERICA **Project #:** M-081512-8

Design Data **Configuration: SHELVING 84H x 48W x 18D**

1) The analyses of the light duty storage fixtures conforms to the requirements of the 2009 IBC

2) Steel minimum yield, Fy= 36 ksi unless otherwise noted on the plans or analysis herein.

3) Anchor bolts shall be provided by installer per ICC reference on the calculations herein. The installer must provide any special inspection as called out on plans or calculations, or as required by the ICC report indicated herein.

4) All welds shall conform to AWS procedures, utilizing E70xx electrodes or similar. All such welds shall be performed in shop, with no field welding allowed other than those supervised by a licensed deputy inspector.

5) The slab on grade is assumed to be 5" thick with minimum 2500 psi compressive strength. Soil bearing capacity is 1000 psf.

Structural Concepts Engineering
1200 N. Jefferson Ste. Ste F Anaheim, CA 92807 Tel: 714.632.7330 Fax: 714.632.7763

By: S.P. **Project:** TOMRA NORTH AMERICA **Project #:** M-081512-8

Summary of Results **Configuration: SHELVING 84H x 48W x 18D**

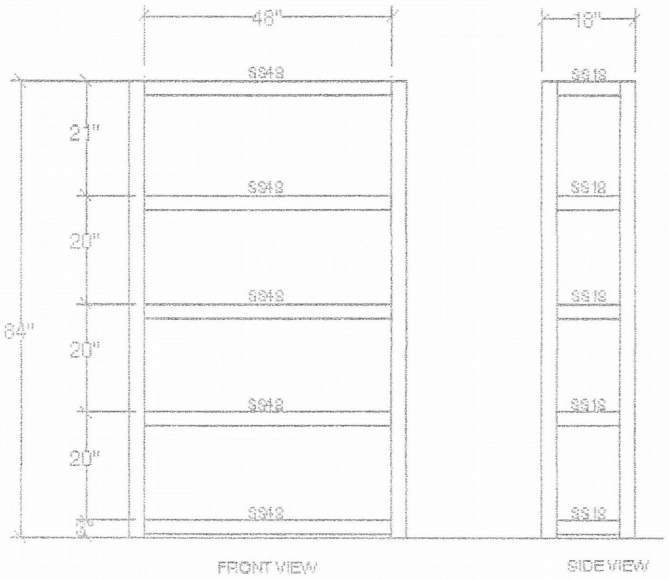

Shelf Configuration

# of Levels=	5
D=	18.0 in
H=	84.0 in
L=	48.0 in

Location	Elevation	Load
h1=	3.0 in	100 lb
h2=	20.0 in	100 lb
h3=	20.0 in	100 lb
h4=	20.0 in	100 lb
h5=	21.0 in	100 lb

Seismic Zone Coef, Ss= 0.99
Seismic Zone Coef, Fa= 1.11

Steel Fy= 36,000 psi

Total Height= 84.0 in

Component Summary			
Column	**LURH L1-1/2"x14ga**	**0.10**	**OK**
Beam	**SS Double Rivet BeamTyp**	**0.13**	**OK**
Beam Rivet	**1-1/2" Vertical Spacing**	**0.09**	**OK**
Anchor	**(1) 3/8 diam x 2" Embed POWER STUD SD2 per T post, 1 per L Post (ICC 2502) Inspection Required**	**0.08**	**OK**
Foot Plate	**5-3/4x3-5/8x10 ga RDSFP @ T Post, 3-1/2x3-5/8 x10 ga RSSFP @ L Post**	**0.01**	**OK**
Slab	**5 in thick x 2500 psi slab/1000 psf soil**	**0.05**	**OK**

Notes

Structural Concepts Engineering
1200 N. Jefferson Ste. Ste F Anaheim, CA 92807 Tel: 714.632.7330 Fax: 714.632.7763

By: S.P. **Project:** TOMRA NORTH AMERICA **Project #:** M-081512-8

Seismic Forces **Configuration: SHELVING 84H x 48W x 18D**

$V_{eq12.8-2}$= S_{DS}*I*W/R
$V_{eq\ 13.3-1}$= 0.4 * ap * S_{DS} * W * (1 + 2*z/h)/(Rp/Ip)
$V_{eq\ 13.3-3}$= 0.3* S_{DS} * Ip * W

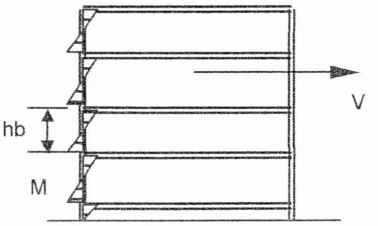

Elevation

V_{min}= 0.015
(RMI Sec 2.5.1.2)

S_{DS}= Fa * Ss * (2/3)
= 0.72701
Veq12.8-2= 0.2077
Veq 13.3-1= 0.1163
Veq 13.3-3= 0.2181
$V_{minimum}$= 0.015

Fa= 1.11
Ss= 0.99
R= 3.50
Ip= 1.00
PL_{RF}= 1.00
F= 1.00

# of levels= 5
ap= 1.0
Rp= 2.5
z/h= 0.00

Catwalk LL= 0 psf
Catwalk DL= 0 psf
Trib Area= 20.0 ft^2
Catwalk deck load= (0 psf*0.25/0.67+0 psf)*20 ft^2
= lb
Shelf LL= 100 lb

Seismic Coeff= 0.2181 (Either Direction)

Down Aisle Seismic Shear (Longitudinal)

Qty Moment Beams longit= 5
Wlong= Σ(LL*0.67+DL)
= 380 lb
Vlong=V_L= 0.218103 * 380 lb
= 83 lb
V_L/2= 42 lb

Cross Aisle Seismic Shear (Transverse)

Qty Moment Beams transverse= 5
Wtransv= Σ(LL*0.67+DL)
= 380 lb
Vtransverse=V_T= 0.218103 * 380 lb
= 83 lb
V_T/col= 42 lb

Transverse Distribution

Level	LL*0.67	DL	hi	wi*hi	Fi	Fi*hi	Moment Resisting Dbl Rivet Beams Vn	hb	Mn	Mconn
1	67 lb	9 lb	3 in	228	1.2 lb	4 in-lb	42.00 lb	3 in	126 in-lb	231 in-lb
2	67 lb	9 lb	23 in	1,748	8.8 lb	202 in-lb	33.60 lb	20 in	336 in-lb	294 in-lb
3	67 lb	9 lb	43 in	3,268	16.5 lb	710 in-lb	25.20 lb	20 in	252 in-lb	210 in-lb
4	67 lb	9 lb	63 in	4,788	24.2 lb	1,525 in-lb	16.80 lb	20 in	168 in-lb	128 in-lb
5	67 lb	9 lb	84 in	6,384	32.3 lb	2,713 in-lb	8.40 lb	21 in	88 in-lb	44 in-lb
Sum:	335 lb	45 lb	W=380 lb	16,416	83 lb	Movt=5153.3 in-lb				

Smilarly, Mlong= 291 in-lb
Mconn-long= 291 in-lb

Transverse Column Loads

Pstatic= Σ(LL+DL)
= 273 lb

Depth= 18.0 in
Pseismic= Movt/Depth
= 286 lb
Mtransv=M_T= 336 in-lb

Longitudinal Column Loads

Pstatic= Σ(LL+DL)
= 273 lb

Mlong= M_T*V_L/V_T
= 291 in-lb

Structural Concepts Engineering
1200 N. Jefferson Ste. Ste F Anaheim, CA 92807 Tel: 714.632.7330 Fax: 714.632.7763

By: S.P. **Project:** TOMRA NORTH AMERICA **Project #:** M-081512-8

Transverse Column Loads (Weak Axis Bending) **Configuration: SHELVING 84H x 48W x 18D**

Net Section Properties

Column= LURH L1-1/2"x14ga
Aeff = 0.358 in^2
Ix (downaisle) = 0.148 in^4
Sx (downaisle) = 0.099 in^3
rx (downaisle) = 0.642 in
Iy (crossaisle) = 0.087 in^4
Sy (crossaisle) = 0.090 in^3
ry (crossaisle) = 0.494 in
Fy= 36 ksi

Ωf= 1.67
E= 29,500 ksi
Cb= 1.0
Cmx= 1.00
Kx = 1.0
Lx = 21.0 in
Ky = 1.0
Ly = 21.0 in

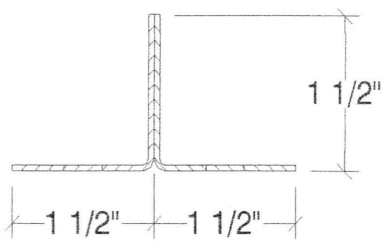

Loads Load Case: (Fully Loaded)

Per ASCE sec 12.14.3.1.3, load combo 6: 1.2DL+0.75LL+0.525V

Axial=P= 1.2DL+0.75LL+0.525Ps **Mtransv*0.525= 154 in-lb**
= 365 lb

Axial DL= 23 lb
Axial LL= 250 lb
Axial Pseismic, Ps= 286 lb

Axial Analysis

KxLx/rx = 1*21"/0.642"
= 32.7

KyLy/ry = 1*21"/0.494"
= 42.5

Fe > Fy/2
Fn= Fy(1-Fy/4Fe)
= 36 ksi*[1-36 ksi/(4*161.1 ksi)]
= 34.0 ksi

Fe= π^2E/(KL/r)max^2
= 161.1ksi

Fy/2= 18.0 ksi

Pn= Aeff*Fn
= 12,168 lb

Ωc= 1.92

Pa= Pn/Ωc
= 12168 lb/1.92
= 6,338 lb

P/Pa= 0.06 < 0.15

Bending Analysis

Check: P/Pa + My/May ≤ 1.33

Pno= Ae*Fy
= 0.358 in^2 *36000 psi
= 12,888 lb

Pao= Pno/Ωc
= 12888lb/1.92
= 6,713 lb

Myield=My= Sy*Fy
= 0.09 in^3 * 36000 psi
= 3,240 in-lb

May= My/Ωf
= 3240 in-lb/1.67
= 1,940 in-lb

Pcr= π^2EI/(KL)max^2
= π^2*29500000 psi/(1*21 in)^2
= 97,711 lb

μ= {1/[1-(Ωc*P/Pcr)]}^-1
= {1/[1-(1.92*365 lb/97711 lb)]}^-1
= 0.99

Combined Stresses

(365 lb/6338 lb) + (154 in-lb/1940 in-lb) = 0.13 < 1.0, OK (EQ C5-3)

Structural Concepts Engineering
1200 N. Jefferson Ste. Ste F Anaheim, CA 92807 Tel: 714.632.7330 Fax: 714.632.7763

By: S.P. **Project:** TOMRA NORTH AMERICA **Project #:** M-081512-8

Longitudinal Column Loads (Strong Axis Bending) **Configuration: SHELVING 84H x 48W x 18D**

Net Section Properties

Column= LURH L1-1/2"x14ga
Aeff = 0.358 in^2
Ix (downaisle) = 0.148 in^4
Sx (downaisle) = 0.099 in^3
rx (downaisle) = 0.642 in
Iy (crossaisle) = 0.087 in^4
Sy (crossaisle) = 0.090 in^3
ry (crossaisle) = 0.494 in
Fy= 36 ksi

Ωf= 1.67
E= 29,500 ksi
Cb= 1.0
Cmx= 1.00
Kx = 1.0
Lx = 21.0 in
Ky = 1.0
Ly = 21.0 in

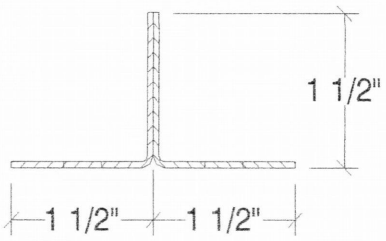

Loads Load Case: (Fully Loaded)

Per ASCE sec 12.14.3.1.3, load combo 6: 1.2DL+0.75LL+0.525V

Axial=P= 1.0DL+0.75LL+0.525Ps **Mlong*0.525= 153 in-lb**
= 215 lb

Axial DL= 23 lb
Axial LL= 250 lb
Axial Pseismic, Ps= 0 lb

Axial Analysis

KxLx/rx = 1*21"/0.642"
= 32.7

KyLy/ry = 1*21"/0.494"
= 42.5

Fe > Fy/2
Fn= Fy(1-Fy/4Fe)
= 36 ksi*[1-36 ksi/(4*161.1 ksi)]
= 34.0 ksi

Fe= π^2E/(KL/r)max^2
= 161.1ksi

Fy/2= 18.0 ksi

Pn= Aeff*Fn
= 12,168 lb

Ωc= 1.92

Pa= Pn/Ωc
= 12168 lb/1.92
= 6,338 lb

P/Pa= 0.03 < 0.15

Bending Analysis

Check: P/Pa + My/May ≤ 1.33

Pno= Ae*Fy
= 0.358 in^2 *36000 psi
= 12,888 lb

Pao= Pno/Ωc
= 12888lb/1.92
= 6,713 lb

Myield=My= Sx*Fy
= 0.099 in^3 * 36000 psi
= 3,564 in-lb

May= My/Ωf
= 3564 in-lb/1.67
= 2,134 in-lb

Pcr= π^2EI/(KL)max^2
= π^2*29500000 psi/(1*21 in)^2
= 97,711 lb

μ= {1/[1-(Ωc*P/Pcr)]}^-1
= {1/[1-(1.92*215 lb/97711 lb)]}^-1
= 1.00

Combined Stresses

(215 lb/6338 lb) + (153 in-lb/2134 in-lb) = 0.10 < 1.0, OK (EQ C5-3)

Structural Concepts Engineering
1200 N. Jefferson Ste. Ste F Anaheim, CA 92807 Tel: 714.632.7330 Fax: 714.632.7763

By: S.P. **Project:** TOMRA NORTH AMERICA **Project #:** M-081512-8

Double Rivet Beam **Configuration: SHELVING 84H x 48W x 18D**

Beam Type= SS Double Rivet Beam
Ix= 0.2060 in^4
Sx= 0.123 in^3
Fy-beam= 36,000 psi
Shelf Span=L= 48 in

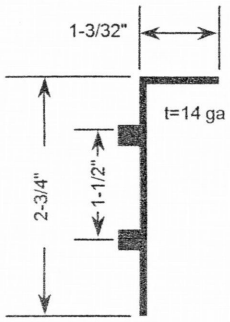

SS Dbl Rivet Beam

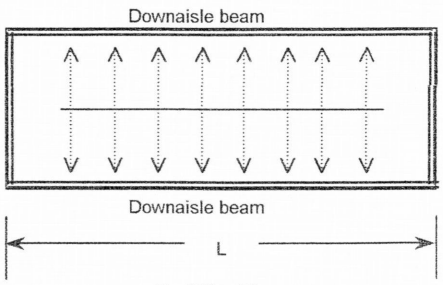

Shelf Plan View

Check Beam Bending

Shelf LL= 109 lb

Load=w=LL/(2*L)= 14.8 plf

M= w * L^2/8
= 355 in-lb

fb= M/Sx
= 2,888 psi

Fb= 0.6 * Fy
21,600 psi

fb/Fb= 0.13 OK

Check Beam Deflection

E= 29,500,000 psi

D= 5 * w * L^4/(384 * E * Ix)
= 0.0145 in

Dallow= L/180
= **0.27 in OK**

Check DRB Beam Rivets For Static + Seismic Loads

Rivet Spacing=d= 1.5 in
Rivet diameter= 0.3125 in
Fy-rivet= 36,000 psi

tmin= 0.075 in
Fu= 58,000 psi

M*0.525= 154 in-lb
C= M/d
= 103 lb

W= (LL+DL)/4
= 27 lb

Shear Capacity= Rivet Area * 0.4 * Fy-rivet
= [(0.3125 in)^2 * pi/4] * 0.4 * 36000 psi
= 1,104 lb

Bearing Capacity= Rivet Diam * tmin * Fu * 1.2
= 1,631 lb

Effective Shear= [(W/2)^2 + C^2]^0.5
= 104 lb **OK**

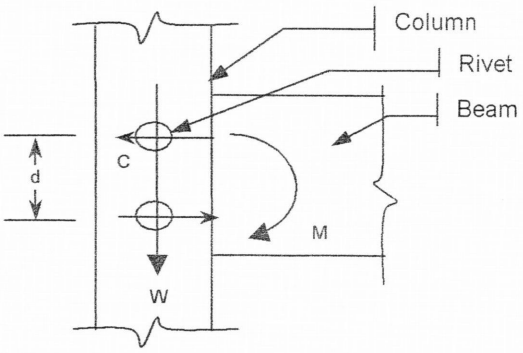

Beam to Column

Structural Concepts Engineering
1200 N. Jefferson Ste. Ste F Anaheim, CA 92807 Tel: 714.632.7330 Fax: 714.632.7763

By: S.P. **Project:** TOMRA NORTH AMERICA **Project #:** M-081512-8

Anchors **Configuration: SHELVING 84H x 48W x 18D**

Loads

Check Load case: DL+0.75LL+0.525V

Vtrans=V= 83 lb

Total DL/Frame= 45 lb
Total LL/Frame= 335 lb
Wst=(1.0*DL+LL*0.67*0.75)total= 296 lb
LL @ TOP= 100 lb
DL/Lvl= 9 lb

Lateral Ovt Forces=Σ(Fi*hi)= 5,153 in-lb

Frame Depth=D= 18.0 in
Htop-lvl= 84.0 in
H= 84.0 in
# Levels= 5
# Anchors/post= 2

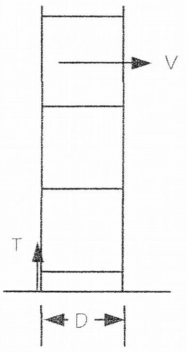

SIDE ELEVATION

Fully Loaded rack

Vtrans= 83 lb

Movt= Σ(Fi*hi)*0.525
= 2,705 in-lb

Mst= Wst * D/2
= 296.25 lb * 18 in/2
= 2,666 in-lb

Uplift=T= (Movt-Mst)/D
= (2705 in-lb - 2666 in-lb)/18 in
= 2 lb

Top Level Loaded Only

Critical Level= 5

Hgt @ Lvl 5= 84.0 in

V1= 0.2181 * (100 lb)
= 22 lb
V2= 0.2181 * (9 lb*5)
= 10 lb
Mst= 1.0*(LL-top+DL-total) *D/2
= (100 lb + 9 lb*5) * 18 in/2
= 1,305 in-lb

Movt= V1*Htop + V2*H/2
= 22 lb * 84 in + 10 lb * 84 in/2
= 2,268 in-lb

Uplift=T= (Movt-Mst)/D
= (2268 in-lb - 1305 in-lb)/18 in
= 54 lb

Anchor

Check (2) 3/8 diam x 2" Embed POWER STUD SD2 anchor(s) per footplate
Special inspection is required per ICC 2502.

Pullout Capacity=Tcap= 760 lb
Shear Capacity=Vcap= 920 lb

Phi= 1.00

Tcap*Phi= 760 lb
Vcap*Phi= 920 lb

Fully Loaded:

(1 lb/760 lb)^1 + (21 lb/920 lb)^1 = 0.02 <= 1.0 OK

Top Level Loaded:

(27 lb/760 lb)^1 + (6 lb/920 lb)^1 = 0.04 <= 1.0 OK

Structural Concepts Engineering
1200 N. Jefferson Ste. Ste F Anaheim, CA 92807 Tel: 714.632.7330 Fax: 714.632.7763

By: S.P. **Project:** TOMRA NORTH AMERICA **Project #:** M-081512-8

Base Plate **Configuration: SHELVING 84H x 48W x 18D**

Section

Actual base plate for T Post is 5.75 in x 3.625 in x 14 ga, but a smaller area is considered to be effective due to the rigidity limitations of the baseplate

Width=B = 3.50 in
Depth=D = 2.00 in
Plate Thickness=t = 0.135 in

Column Width=b = 3.750 in
Column depth=b = 1.875 in
L = 0.00 in
Fy = 36,000 psi

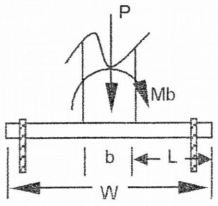

Cross Aisle Loads

Pstatic= 273 lb Pseismic= 286 lb P=Pstatic+Pseismic= 559 lb

L = Base Plate Depth-Col Depth
= 0.13 in

fa = P/A = P/(D*B)
= 80 psi

M= wL^2/2= fa*L^2/2
= 1 in-lb/in

Sbase/in = (1)(t^2)/6
= 0.003 in^3/in

Fbase = 0.75*Fy*1.33
= 36,000 psi

fb/Fb = M/[(S-plate)(Fb)]
= **0.01** **OK**

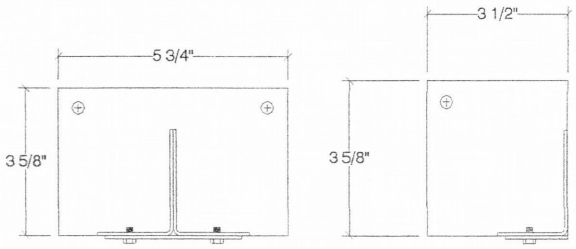

CONNECT TO UPRIGHT
W/ (2) 1/4" TEK SCREWS
RDSFP FOOTPLATE

CONNECT TO UPRIGHT
W/ (1) 1/4" TEK SCREW
RSSFP FOOTPLATE

Structural Concepts Engineering
1729 S. Douglass Rd. Ste B. CA 92806 Tel: 714.456.0056 Fax: 714.456.0066

By: S.P. **Project:** TOMRA NORTH AMERICA **Project #:** M-081512-8

Slab on Grade **Configuration: SHELVING 84H x 48W x 18D**

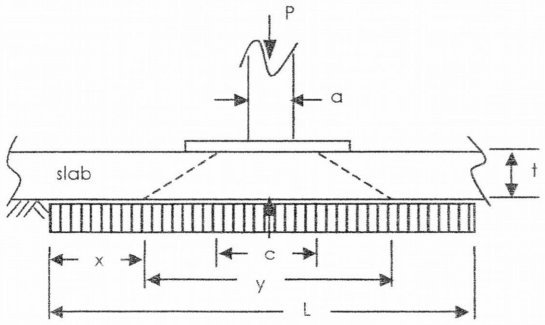

SLAB ELEVATION

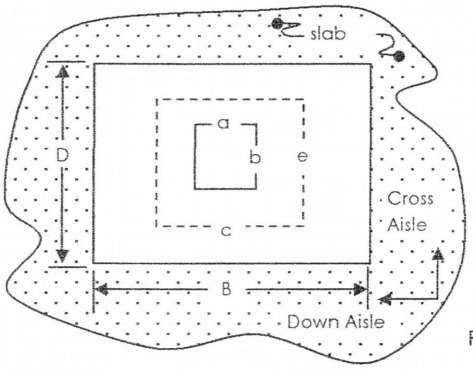

Baseplate Plan View

Concrete
f'c= 2,500 psi
tslab=t= 5.0 in
phi=Ø= 0.65

Soil
fsoil= 1,000 psf
Movt= 5,153 in-lb
Frame depth= 18.0 in

Base Plate
B= 3.50 in width=a= 3.75 in eff. baseplate width=c= 3.50 in
D= 2.00 in depth=b= 1.88 in eff. baseplate depth=e= 2.00 in

Load Case 1: Product + Seismic

Product DL= 45 lb P-seismic=E= (Movt/Frame depth)*1.4 (Strength Design Loads)
Product LL= 250 lb = 401 lb

Puncture

Pu= 1.2DL + 1.0PLL + 1.0*E
= 705 lb
Apunct= [(c+t)+(e+t)]*2*t
= 155.0 in^2

Fpunct= 2.66*phi*sqrt(f'c)
= 86.5 psi
fv/Fv= Pu/(Apunct*Fpunct)
= **0.05** **< 1.0 OK**

Slab Bending

Asoil= (P*144)/(fsoil)
= 101 in^2
x= (L-y)/2
= 0.0 in
Fb= 5*(phi)*(f'c)^0.5
= 162.5 psi

L= (Asoil)^0.5
= 10.05 in
M= w*x^2/2
= (fsoil*x^2)/(144*2)
= 0 in-lb

y= (c*e)^0.5 + t*2
= 12.6 in
S-slab= 1*t^2/6
= 4.17 in^3
fb/Fb= M/(S-slab*Fb)
= **0.00** **< 1.0 OK**

Load Case 2: Static Loads

PDL= 45 lb PLL= 250 lb

Puncture

Pu= 1.2*DL + 1.6*LL
= 454 lb
Apunct= [(c+t)+(e+t)]*2*t
= 155 in^2

Fpunct= 2.66*phi*sqrt(f'c)
= 86.5 psi
fv/Fv= Pu/(Apunct*Fpunct)
= **0.03** **< 1.0 OK**

Slab Bending

Asoil= (Pu*144)/(fsoil)
= 65 in^2
x= (L-y)/2
= 0.0 in
Fb= 5*(phi)*(f'c)^0.5
= 162.5 psi

L= (Asoil)^0.5
= 8.09 in
M= w*x^2/2
= (fsoil*x^2)/(144*2)
= 0 in-lb

y= (c*e)^0.5 + t*2
= 12.6 in
S-slab= 1*t^2/6
= 4.17 in^3
fb/Fb= M/(S-slab*Fb)
= **0.00** **< 1.0, OK**

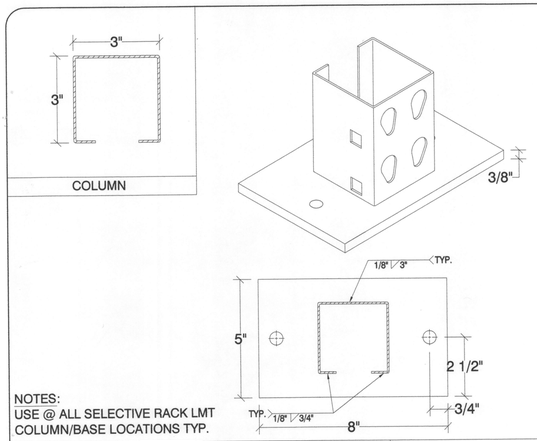

NOTES:
USE @ ALL SELECTIVE RACK LMT COLUMN/BASE LOCATIONS TYP.

DESCRIPTION	BASE PLATE: 8" x 5"	DESCRIPTION	COLUMN: LM25
MATERIAL	3/8" THICK PLATE	MATERIAL	13 GAGE THK.
STEEL YIELD	ASTM A36, Fy=36,000 PSI	STEEL YIELD	ASTM A570, Fy=55,000 PSI

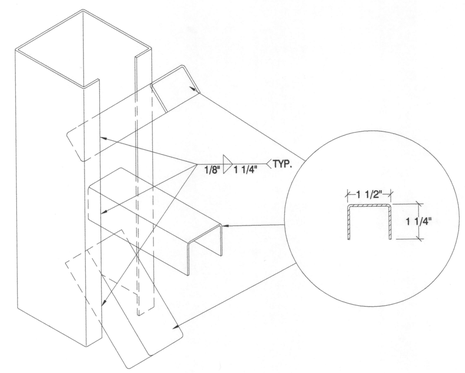

DESCRIPTION	BRACING: HORIZ. & DIAG.	NOTES: USE @ ALL BRACE LOCATIONS TYP.
MATERIAL	14 GAGE STEEL	
STEEL YIELD	ASTM A570, Fy=55,000 PSI	

NOT A DEPICTION OF THIS PROJECT

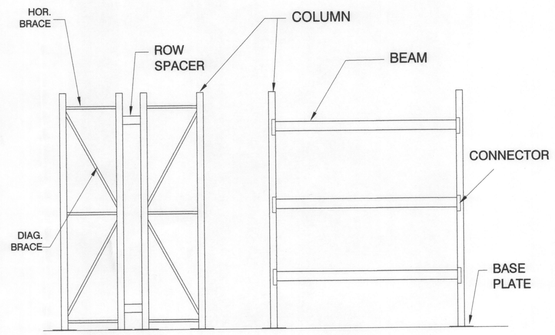

DESCRIPTION	GENERAL RACK VIEW
NOTES	

GENERAL PROJECT NOTES

1. DESIGNED PER REQUIREMENTS OF THE 2009 IBC, ASCE 7-05 AND THE 2008 RMI RACK DESIGN MANUAL
2. SEISMIC CRITERIA Ss = 0.986, S1 = 0.351, Fa = 1.106, Fv = 1.697 Ip = 1.0 (NO PUBLIC ACCESS), Sds = 0.727, Sd1 = 0.398 OCC. CATAG. II, SITE CLASS D, SEISMIC DESIGN CATAG. D.
3. STORAGE CAPACITY:
   TYPE 1 -4 LVL= 3400# PER LEVEL TYP.
   TYPE 2 -6 LVL= 2000# PER LEVEL TYP.
   TYPE 3 - 6 LVL = 2200# PER LEVEL TYP.
   TYPE 4 - 5 LVL = 2400# PER LEVEL TYP.
4. ANCHORS POWERS: POWER SD2 WEDGE ESR #2502, 1/2"Ø X 3-1/4" MIN. EMBED AS USED IN CALCULATIONS OR ICC & ENGINEER APPROVED EQUAL. (2) ANCHORS PER BASEPLATE.
5. PERIODIC SPECIAL INSPECTION IS REQUIRED DURING ANCHOR INSTALLATION.
6. EXISTING S.O.G. CONCRETE THICKNESS & COMPRESSIVE STRENGTH, 5" X 2500 PSI
7. SOIL BEARING PRESSURE 1000 PSF
8. ALL RACK INSTALLATIONS AND RACKS MANUFACTURED IN CONFORMITY WITH THIS STANDARD SHALL DISPLAY IN ONE OR MORE CONSPICUOUS LOCATIONS A PERMANENT PLAQUE EACH NOT LESS THAN 50 SQUARE INCHES IN AREA AND SHOWING THE MAXIMUM PERMISSIBLE UNIT LOAD IN CLEAR, LEGIBLE PRINT.
9. ALL BOLTS GR. 5 OR BETTER.
10. ALL WELDING PERFORMED IN THE SHOP OF AN APPROVED FABRICATOR BY AWS CERTIFIED WELDERS USING E70XX ELECTRODE OR BETTER. FIELD WELD, IF ANY, SHALL BE PROVIDED UNDER THE SUPERVISION OF A LICENSED DEPUTY INSPECTOR.
11. THE CLEAR SPACE BELOW SPRINKLERS SHALL BE A MIN. OF 18" BETWEEN TOP OF THE STORAGE AND THE CEILING SPRINKLER DEFLECTOR.

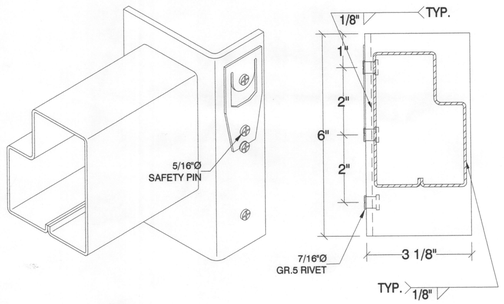

DESCRIPTION	3-PIN CONNECTOR	NOTES: USE @ ALL BEAM TO COLUMN CONNECTION LOCATIONS TYP.U.O.N.
MATERIAL	7 GAGE	
STEEL YIELD	ASTM A570, Fy=55,000 PSI	

TYPE 1 SELECTIVE RACK LMT
4 LEVEL

TYPE 2 SELECTIVE RACK LMT
6 LEVEL

TYPE 3 SELECTIVE RACK LMT
6 LEVEL

TYPE 4 SELECTIVE RACK LMT
5 LEVEL

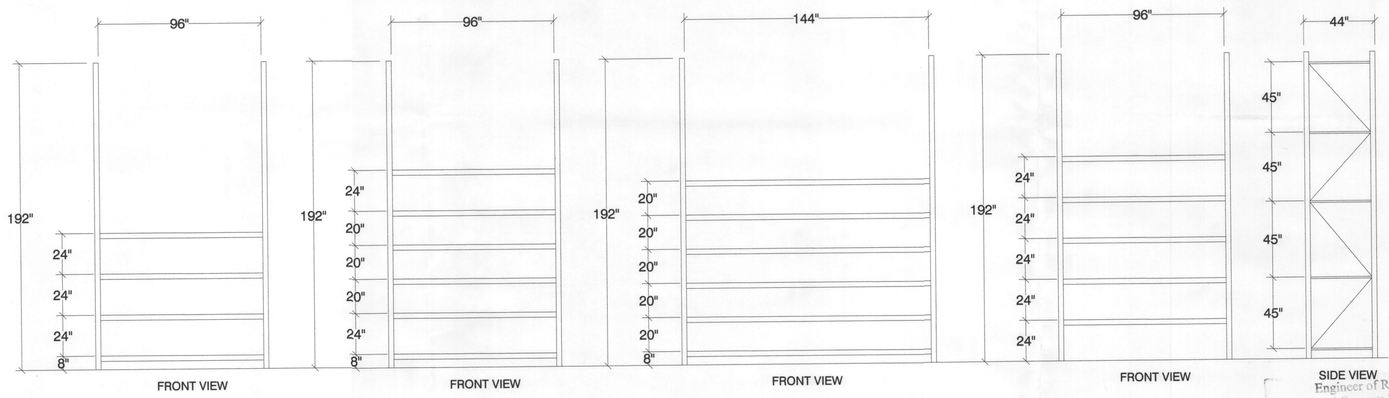

DESCRIPTION	STORAGE RACK ELEVATION

City of Portland
REVIEWED FOR CODE COMPLIANCE
AUG 29 2012
12-173881FA
Permit Number

Engineer of Record
Structural Concepts Engineering
1200 N. Jefferson St., Ste. F
Anaheim, Ca. 92807
(714) 632.7330

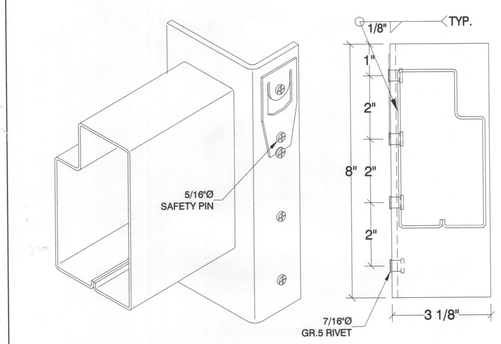

DESCRIPTION	4-PIN CONNECTOR	NOTES: USE @ ALL 144"BAY BEAM TO COLUMN CONNECTION LOCATIONS TYP.
MATERIAL	7 GAGE	
STEEL YIELD	ASTM A570, Fy=55,000 PSI	

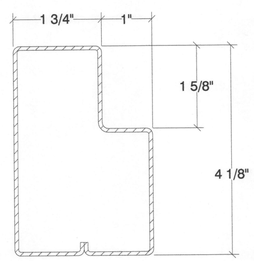

DESCRIPTION	4-1/8" BEAM (LBF416)	NOTES: USE @ ALL 96" BEAM LOCATIONS TYP.
MATERIAL	16 GAGE	
STEEL YIELD	ASTM A570, Fy=55,000 PSI	

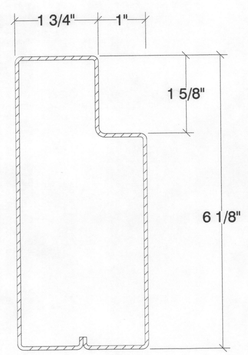

DESCRIPTION	6-1/8" BEAM (LBF614)	NOTES: USE @ ALL 144" BEAM LOCATIONS TYP.
MATERIAL	14 GAGE	
STEEL YIELD	ASTM A570, Fy=55,000 PSI	

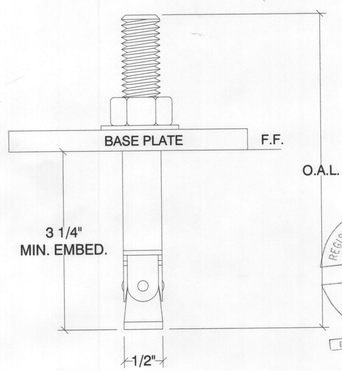

NOTES:
CONFIRM O.A.L. OF ANCHORS WITH INSTALLER TO ENSURE REQUIRED EMBEDMENT IS OBTAINED.

DESCRIPTION	POWER STUD SD2 ANCHOR	NOTES: SEE NOTE #4 FOR ANCHOR SPECS
SIZE	1/2" DIA. X 3-1/4" MIN. EMBEDT.	
ESR#	2502	

REGISTERED PROFESSIONAL ENGINEER 72544 ALI ABOLHASSANI
EXPIRATION DATE 12/31/13
AUG 15 2012

DATE	REV.	REVISION

STRUCTURAL CONCEPTS ENGINEERING
1200 N. JEFFERSON ST. STE. #F ANAHEIM, CA 92807 PH.714.632.7330 FAX. 714.632.7763

TOMRA NORTH AMERICA
4322 NW YEON AVE.
PORTLAND, OR 97210

CLIENT: NORTHWEST HANDLING SYSTEMS
DATE: AUG-15-2012
DRWN BY: V.N.
MFG.: LMT
TYPE: STORAGE RACK

JOB NO.
M-081512-8

SHEET NO.
SCE 1 OF 2

12-173881FA

2

F-1

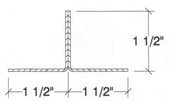

"T" POST

ATTACH POST TO FOOTPLATE
WITH (2) #12 TEK SCREW

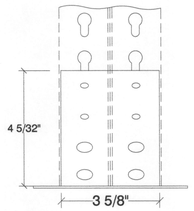

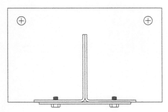

CONNECT TO UPRIGHT
W/ (2) 1/4" TEK SCREWS

NOTES:
USE @ INTERMEDIATE "T"POST LOCATIONS,
TYPES OFFICE, OPTICS, BATHROOM SHELVING

DESCRIPTION	FOOT PLATE: RDSFP 5 3/4" X 3-5/8"	DESCRIPTION	"T" POST: ROLL FORM (LURH)
MATERIAL	14 GAGE THICK PLATE	MATERIAL	14 GAGE STEEL
STEEL YIELD	ASTM A36, Fy=36,000 PSI	STEEL YIELD	ASTM A570, Fy=36,000 PSI

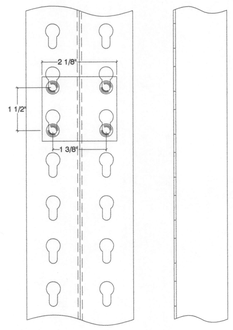

NOTES: MIN (3) @ ALL POSTS

DESCRIPTION	TIE PLATE
MATERIAL	14 GAGE STEEL
STEEL YIELD	ASTM A570, Fy=36,000 PSI

NOTES:
USE AT ALL POST TO POST ATTACHMENTS

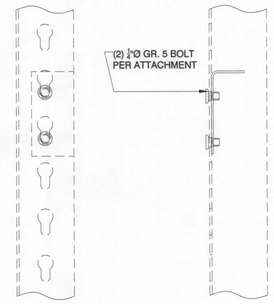

NOTES:
USE AT ALL POST TO SHELF BEAM
ATTACHMENTS

DESCRIPTION	SHELF TO POST CONNECTION

GENERAL PROJECT NOTES

1. DESIGNED PER REQUIREMENTS OF THE 2009 IBC, ASCE 7-05 AND THE 2008 RMI RACK DESIGN MANUAL
2. SEISMIC CRITERIA Ss = 0.986, S1 = 0.351, Fa = 1.106, Fv = 1.697
   Ip = 1.0 (NO PUBLIC ACCESS), Sds = 0.727, Sd1 = 0.398 OCC. CATAG. II,
   SITE CLASS D, SEISMIC DESIGN CATAG. D.
3. STORAGE CAPACITY:
   100# PER SHELF TYP.
4. ANCHORS POWERS: POWER SD2 WEDGE ESR #2502, 3/8"Ø X 2" MIN. EMBED
   AS USED IN CALCS OR ICC & ENGINEER APPROVED EQUAL.
   (1) ANCHOR PER RDSFP @ "T" POST
   (1) ANCHOR PER RSSFP @ "L" POST
5. PERIODIC SPECIAL INSPECTION IS REQUIRED DURING ANCHOR INSTALLATION.
6. EXISTING S.O.G. CONCRETE THICKNESS & COMPRESSIVE STRENGTH, 5" X 2500 PSI
7. SOIL BEARING PRESSURE 1000 PSF
8. ALL RACK INSTALLATIONS AND RACKS MANUFACTURED IN CONFORMITY WITH THIS STANDARD SHALL DISPLAY IN ONE OR MORE CONSPICUOUS LOCATIONS A PERMANENT PLAQUE EACH NOT LESS THAN 50 SQUARE INCHES IN AREA AND SHOWING THE MAXIMUM PERMISSIBLE UNIT LOAD IN CLEAR, LEGIBLE PRINT.
9. ALL BOLTS GR. 5 OR BETTER.
10. ALL WELDING PERFORMED IN THE SHOP OF AN APPROVED FABRICATOR BY AWS CERTIFIED WELDERS USING E70XX ELECTRODE OR BETTER. FIELD WELDS, IF ANY, SHALL BE PROVIDED UNDER THE SUPERVISION OF A LICENSED DEPUTY INSPECTOR.
11. THE CLEAR SPACE BELOW SPRINKLERS SHALL BE A MIN. OF 18" BETWEEN TOP OF THE STORAGE AND THE CEILING SPRINKLER DEFLECTOR.

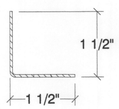

"L" POST

ATTACH POST TO FOOTPLATE
WITH (1) #12 TEK SCREW

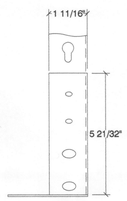

CONNECT TO UPRIGHT
W/ (1) 1/4" TEK SCREW

NOTES:
USE @ ALL CORNER "L" POST LOCATIONS

DESCRIPTION	FOOT PLATE: RSSFP 3 1/2" X 3-5/8"	DESCRIPTION	"L" POST: ROLL FORM (LURH)
MATERIAL	14 GAGE THICK PLATE	MATERIAL	14 GAGE STEEL
STEEL YIELD	ASTM A36, Fy=36,000 PSI	STEEL YIELD	ASTM A570, Fy=36,000 PSI

SHELVING 84H X 48W X 18D

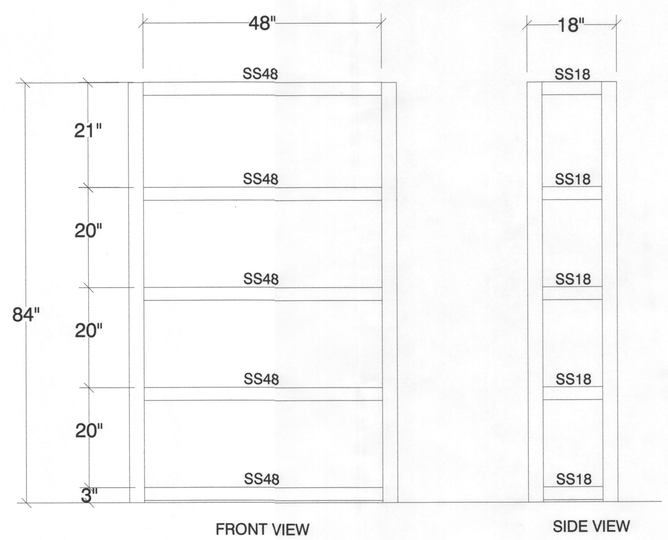

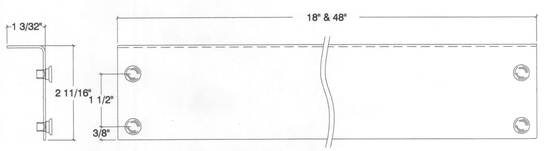

NOTES:
SEE ELEVATION VIEW FOR PLACEMENT

DESCRIPTION	DOUBLE RIVET BEAM (SS 18 &48)
MATERIAL	14 GAGE
STEEL YIELD	ASTM A36, Fy=36,000 PSI

SHELVING ELEVATIONS

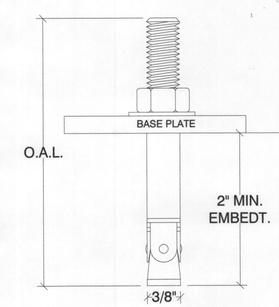

Engineer of Record
Structural Concepts Engineering
1200 N. Jefferson St., Ste F
Anaheim, Ca. 92807
(714) 632.7330

REGISTERED PROFESSIONAL ENGINEER
72544PE
OREGON
MAR. 11, 2003
ALI ABOLHASSANI
EXPIRATION DATE 12/31/12

AUG 1 5 2012

DESCRIPTION	POWER STUD SD2 ANCHOR, ICC ESR #2502
MATERIAL	3/8"Ø X 2" MIN. EMBED., SEE NOTE #4 ABOVE FOR SPEC.S.

DATE	REV.	REVISION

STRUCTURAL CONCEPTS ENGINEERING
1200 JEFFERSON ST. STE.F ANAHEIM, CA 92807 PH. 714.632.7330 FAX 714.632.7763

TOMRA NORTH AMERICA
4322 NW YEON AVE.
PORTLAND, OR 97210

CLIENT NORTHWEST HANDLING SYSTEMS
DATE AUG-15-2012
DRAWN BY V.N.
MFG. WESTERN PACIFIC
TYPE SHELVING

JOB NO.
M-081512-8

SHEET NO.
SCE 2 OF 2

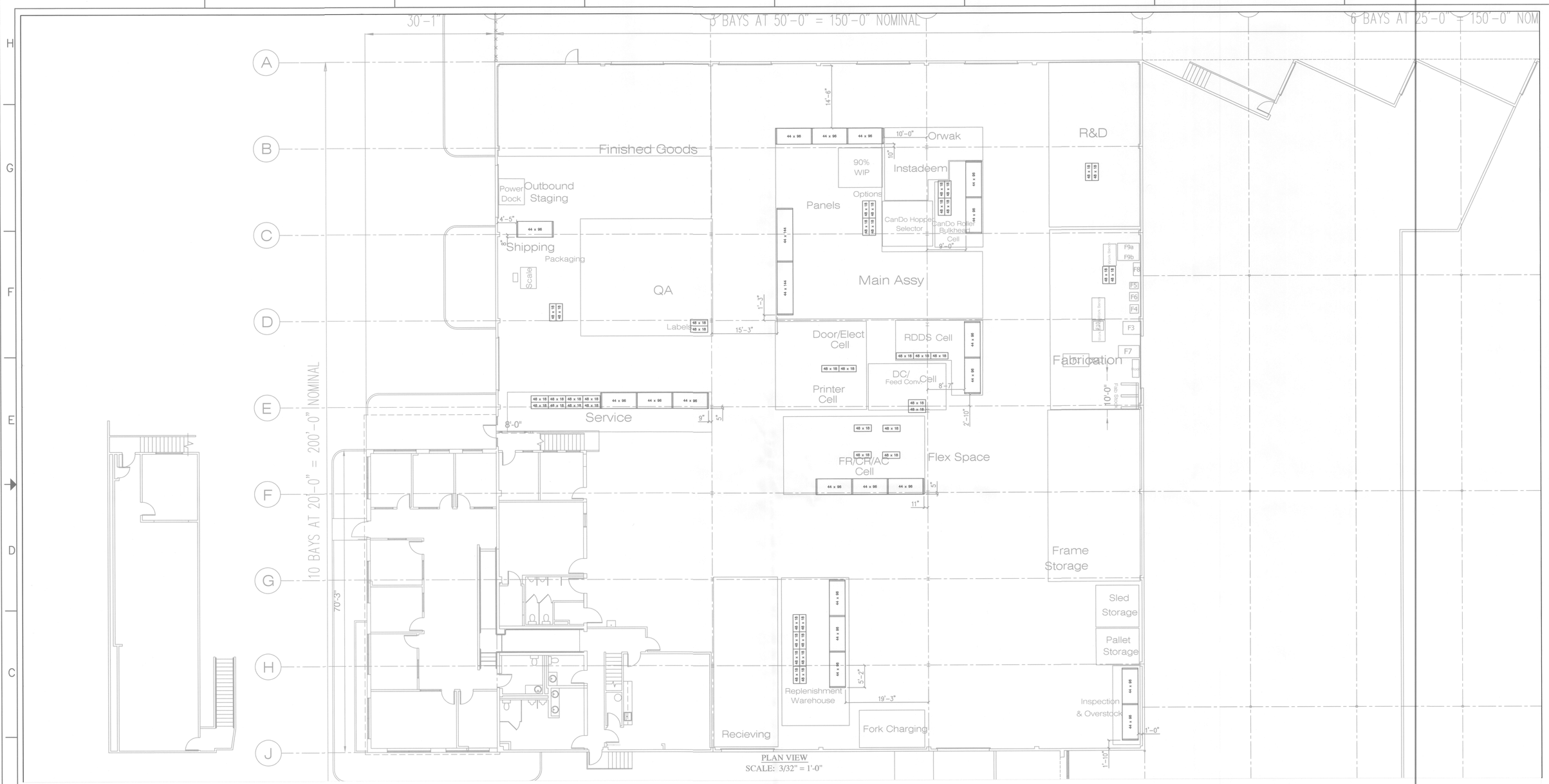

REVISIONS				
ZONE	REV	DESCRIPTION	DATE	APPROVED
	0	ISSUED FOR PERMIT	08/14/12	

CROWN

HYTROL

NORTHWEST HANDLING SYSTEMS

18008 NE AIRPORT WAY
PORTLAND, OREGON
PH.: 503-465-9200 FAX: 503-465-0677

PORTLAND EUGENE RENTON SPOKANE YAKIMA ANCHORAGE

NORTH

PROJECT DESCRIPTION	WAREHOUSE LAYOUT
CUSTOMER INFORMATION	TOMRA 4322 NW YEON AVE PORTLAND, OR 97210
SIZE D / DWG NO.	NWHS-12-TOMRA1-0
DATE	08/14/12
SCALE	AS SHOWN
DRAWN BY	TMI
SHEET	1 OF 1