Building Permit Application
City of Portland, Oregon - Bureau of Development Services

1900 SW 4th Avenue, Portland, Oregon 97201 • 503-823-7310 • TTY 503-823-6868 • www.portlandoregon.gov/bds

This permit application expires if a permit is not obtained within 180 days after it has been accepted as complete.

Type of work

- [x] New construction
- [ ] Addition/alteration/replacement
- [ ] Demolition
- [ ] Other:

Category of construction

- [ ] 1 & 2 family dwelling
- [x] Commercial/industrial
- [ ] Accessory building
- [ ] Multifamily
- [ ] Master builder
- [ ] Other:

Job site information and location

Job no.:

Job address: 6767 NE COLUMBIA BLD

City/State/ZIP: PORTLAND OR 97220

Suite/bldg./apt. no.:

Project name: GEN. EQUIP

Cross street/directions to job site:

Subdivision:

Lot no.

Tax map/parcel no.

Description of work

STEEL CANOPY

- [ ] Reference RS / Combination

Permit no.

[ ] Property owner [ ] Tenant

Name: GENERAL EQUIPMENT

Address: 6767 NE COLUMBIA BLVD

City/State/ZIP: PORTLAND OR

Phone:

FAX:

Owner installation: This installation is being made on property that I own, which is not intended for sale, lease, rent, or exchange.

Owner signature:

Date:

[ ] Contractor

Business name: TO BID KBL CONSTRUCTION

Address: PO BOX 55386

City/State/ZIP: PORTLAND OR 97238

Phone: 971-275-7431

FAX:

CCB lic. no. 161968

Authorized signature:

Print name:

Date:

[x] Applicant [x] Contact Person

Business name: ZAROSINSKI ENGINEERING & DESIGN

Contact name: DEAN ZAROSINSKI

Address: 1400 NW 155TH CIRCLE

City/State/ZIP: VANCOUVER WA 98685

Phone: 360-513-2746

FAX:

E-mail:

Authorized signature:

Print name:

Date:

Office Use Only

Permit no:

Date received:

By:

Required Data: One and Two Family Dwelling

Permit fees* are based on the value of the work performed. Indicate the value (rounded to the nearest dollar) of all equipment, materials, labor, overhead, and the profit for the work indicated on this application.

Valuation:	
Number of bedrooms:	
Number of bathrooms:	
Total number of floors:	
New dwelling area:	square feet
Garage/carport area:	square feet
Covered porch area:	square feet
Deck area:	square feet
Other structure area:	square feet

Required Data: Commercial Use

Permit fees* are based on the value of the work performed. Indicate the value (rounded to the nearest dollar) of all equipment, materials, labor, overhead, and the profit for the work indicated on this application.

Valuation:	50 000
Existing building area:	1600 square feet
New building area:	square feet
Number of stories:	1
Type of construction:	IV
Occupancy groups	
Existing:	
New:	

Notice

All contractors and subcontractors are required to be licensed with the Oregon Construction Contractors Board under ORS 701 and may be required to be licensed in the jurisdiction in which work is being performed. If the applicant is exempt from licensing, the following reasons apply.

Statement of Fact: I certify that the facts and information set forth in this application are true and complete to the best of my knowledge. I understand that any falsification, misrepresentation or omission of fact (whether intentional or not) in this application or any other required document, as well as any misleading statement or omission, may be cause for revocation of permit and/or certificate of occupancy, regardless of how or when discovered.

Building Permit Fees*

Please refer to fee schedule

Fees due upon application	
Amount received	
Date received	

Sub-contractor information can be faxed to 503-823-7693.

Structural Checksheet Response

Permit #: **12-133883-000-00-CO** **Date: 6/13/12**

Customer name and phone number: Dean P. Zarosinski PE 360-513-2746

Note: Please number each change in the '#' column. Use as many lines as necessary to describe your changes. Indicate which reviewer's checksheet you are responding to and the item your change addresses. If the item is not in response to a checksheet, write **customer** *in the last column.*

#	Description of changes, revisions, additions, etc.	Checksheet and item #
1	The special inspection items noted on the form listed on the drawings on an added Sheet S3 A special inspection form has been filled out and provided to document control I shall provide The project owner with a copy of this special inspection form along with the special inspection agency	Sheet S3
2	The minimum material requirements for the steel, concrete, bolts, studs, etc. and other design criteria have been added to Sheet S3	Sheet S3
3	On the new Sheet S3 of the drawings the roof deck and its attachment to the structure are specified.	Sheet S3
4	On sheet A1, references to the frame elevations on the floor plan have been added	Sheet A1
5	The inadvertent notes on the foundation plan have been removed.	Sheet S1
6	The various details on Sheet S1 have been called out the roof plan.	Sheet S2
7	On the roof plan, references have been provided to the braced frame elevations NE and SE/S2.	Sheet S2
8	The C8 members are now identified on the roof plan.	Sheet S2
9	The footings have been redesigned for revised calculations. The drawings now reflect these changes	Sheet S1
10	A revised frame analysis with complete results for the middle frame have been resubmitted	Calculations
11	The frame input and output now submitted has the column joints at the footing modeled as a fixed connection. The footing now has been designed to resist the moment from fixed-base connection. Revised drawings and calculations are provided	Calculations and all structural sheets

RECEIVED
JUN 13 2012
DOCUMENT SERVICES

CITY OF PORTLAND, OREGON – BUREAU OF DEVELOPMENT SERVICES

Special Inspections • 1900 SW Fourth Avenue, Suite 5000 • Portland, Oregon 97201 • www.portlandonline.com/bds

Structural Special Inspection and Observation Program Checksheet

The registered design professional in responsible charge shall prepare and submit a special inspection and structural observation program in accordance with IBC Sections 1704.1.1, 1705.2, and 106.3.4.1, and confirm that the special inspection and structural observations noted below are indicated on the drawings.

~ Please Note that separate Soils and Life Safety Inspection Checksheets may also be required ~

Instructions – Parts D and E of this Checksheet must be fully completed by the Owner (or Architect or Engineer acting as the owner's agent) in order to obtain your permit.
When complete, return this form to BDS Permitting Services. You may return it in person at 1900 SW 4th Ave, by fax to (503) 823-4172, or by email to specialinspectionsforms@portlandoregon.gov

Application #	12-133883-000-00-CO	**Date:**	May 29, 2012
Project Name:	6767 COLUMBIA BLVD		
Site Address:	6767 NE COLUMBIA BLVD		
Architect of Record (Firm)		**Phone #**	
Engineer of Record (Firm)	ZAROSINSKI ENGINEERING AND DESIGN	**Phone #**	360-513-2746

The following special inspections and structural observations shall be performed according to the State Building Code and City of Portland Special Inspection Program Administrative Rules unless a program of inspections is submitted by the Engineer of Record and approved by Bureau of Development Services.

A. REQUIRED SPECIAL INSPECTIONS FOR ALL BUILDING TYPES

- [X] Steel Construction
- [ ] Concrete Construction
- [ ] Anchors – Adhesive
- [ ] Wood Construction
- [ ] Curtainwall
- [ ] Prestressed Concrete
- [X] Anchors – Cast-in-place
- [ ] Masonry
- [ ] Structural Silicone Glazing
- [ ] Shotcrete
- [ ] Anchors – Expansion/Screw
- [ ] Cold Formed Steel Framing
- Special Cases: [ ] [ ] [ ]

B. REQUIRED SPECIAL INSPECTIONS FOR CATEGORY III AND IV BUILDINGS (In addition to those noted above.)

- [ ] Seismic Force Resist. System
- [ ] Storage Racks
- [ ] Access Floors
- [ ] Suspended Ceilings
- [ ] Mechanical Components
- [ ] Electrical Components
- [ ] Cladding
- [ ] Veneer
- [ ] Nonbearing Walls
- [ ] Seismic Isolation System
- Special Cases: [ ] [ ] [ ]

C. STRUCTURAL OBSERVATION

- [ ] Required (The stages of construction at which structural observation is to occur shall be indicated on the drawings.)

D. APPROVED SPECIAL INSPECTOR OR INSPECTION AGENCY (To be completed by the applicant.)

Indicate the City approved special inspector or special inspection agency to perform the required special inspections noted in parts A. and B. above:

- [ ] ACS (503) 443-3799
- [ ] FEI Testing (541) 757-4698
- [ ] Northwest Geotech (503) 682-1880
- [ ] Carlson Testing (503) 684-3460
- [ ] Kleinfelder, Inc. (503) 644-9447
- [X] PSI (503) 289-1778
- [ ] Clair Company (541) 758-1302
- [ ] Materials Testing/Insp (208) 376-4748
- [ ] Other:
- [ ] Columbia West Eng (360) 823-2900
- [ ] Mayes Testing, Inc. (503) 281-7515

E. To be completed by the applicant.

By completing Part E the project owner (or the Architect or Engineer acting as the Owner's Agent) hereby agrees to employ the special inspector or inspection agency and/or engineer of record for the above noted special inspections and/or structural observations. (***Contractors are NOT authorized to agree for the Owner.***)

The project owner shall provide a copy of this checksheet to the special inspection agency and engineer of record.

Print Name ~~GENERAL EQUIPMENT~~ Date 6-13-12
(Project Owner or the Architect or Engineer acting as the Owner's Agent)

Firm DEAN P. ZAROSINSKI Phone 360-513-2746
ZAROSINSKI ENGINEERING

Plans Examiner: Eric Thomas

APPLICANT – COMPLETE PARTS D & E

Life Safety Checksheet Response

Permit #: **12-133883-000-00-CO** **Date: 6/13/12**

Customer name and phone number: _Dean P. Zarosinski PE 360-513-2746

Note: In the spaces below, please provide specific information concerning the changes that you have made in response to the checksheet. Note the checksheet item number, your response or a description of the revision, and the location of the change on the plans (i.e. page number and/or detail number). Use as many lines as needed. *If the item is not in response to a checksheet, write **"Applicant"** in the column labeled "Checksheet item number."*

Checksheet item number	Description of changes, corrections, additions, etc.	Location on plans
1	The use in all of the buildings is to take truck cab, frame, and drive lines and add various equipment to these vehicles such as garbage or recycling pick up equipment it the addition rather than repair that made me classify it as a factory where something is produced via assembly rather than repaired. The existing building to the south has multiple bays where this work is done and the building to the north of the canopy has 2 bays where this assembly work takes place. A description of the use has been added to each existing building and the proposed roofed area	B/C1 Overall Building Floor Plan
2	The maximum exit access travel distance from the upper door on the northern building and the lower door on the southern building. Occupant loading is noted for the upper mezzanine and for each bay in the southern building. Exit doors and bay overhead doors serve an occupant load of 8.	B/C1 Overall Building Floor Plan
3	A reference to a listed 2-hour fire resistive wall assembly for the new frame wall on the east side of the canopy has been added	NE/SD On Sheet S2 with 8.5X11 attachment sheet
4	8" CMU wall has been called out. The 8" block has an equivalent thickness of 4" for standard concrete blocks. The required minimal thickness for 2 hour rating is 3.80"	NE/SD On Sheet S2
5	The section cuts for NE/S2 and SE/S2 have been shown on the plan views.	R/S2On Sheet S2PS

RECEIVED
JUN 13 2012
BDS
DOCUMENT SERVICES

J. Engelhardt

Structural Checksheet Response

Permit #: 12-133883-000-00-CO **Date:** _____

Customer name and phone number: _____

Note: *Please number each change in the '#' column. Use as many lines as necessary to describe your changes. Indicate which reviewer's checksheet you are responding to and the item your change addresses. If the item is not in response to a checksheet, write* **customer** *in the last column.*

#	Description of changes, revisions, additions, etc.	Checksheet and item #
11	PLEASE ADD THESE	
	SHEETS TO CALCULATIONS	

(for office use only)

Zarosinski Engineering and Design
1400 NW 155th Circle
Vancouver, WA 98685
360-513-2746
Email: dzaro@zaroeng.com
By Dean P. Zarosinski PE

Title : General Equipment Canopy
Engineer: Dean P. Zarosinski PE
Project Desc.: Roof over Cleanout area

Job # H0065-1

Steel Column

File: C:\AA WORK\2011 PROJECTS\H0267-1 Gen Equip\Calculations\h0267-1 gen equip calcs.ec6
ENERCALC, INC. 1983-2011, Build:6.12.6.7, Ver:6.12.6.7

Lic. # : KW-06009383 **Licensee : Zarosinski Engineering and Design, Inc.**

Description : Column analysis for perimiter channel HORIZONTAL EMP MEMBER @ ROOF

Code References

Calculations per AISC 360-05, IBC 2006, CBC 2007, ASCE 7-05
Load Combinations Used : 2006 IBC & ASCE 7-05

General Information

Steel Section Name : **C8x11.5**
Analysis Method : Allowable Stress
Steel Stress Grade
Fy : Steel Yield 36.0 ksi
E : Elastic Bending Modulus 29,000.0 ksi
Load Combination : 2006 IBC & ASCE 7-05

Overall Column Height 18.50 ft
Top & Bottom Fixity Top & Bottom Pinned

Brace condition for deflection (buckling) along columns :
X-X (width) axis : Unbraced Length for X-X Axis buckling = 18.8 ft, K = 1.0
Y-Y (depth) axis :Unbraced Length for Y-Y Axis buckling = 18.8 ft, K = 1.0

Applied Loads

Service loads entered. Load Factors will be applied for calculations.

Column self weight included : 212.750 lbs * Dead Load Factor
AXIAL LOADS . . .
Axial Load at 18.50 ft, W = 2.0, E = 2.0 k

DESIGN SUMMARY

Bending & Shear Check Results

PASS Max. Axial+Bending Stress Ratio = **0.5547** : 1
Load Combination +D+W+H
Location of max.above base 0.0 ft
At maximum location values are . . .
Pa : Axial 2.213 k
Pn / Omega : Allowable 3.989 k
Ma-x : Applied 0.0 k-ft
Mn-x / Omega : Allowable 5.240 k-ft
Ma-y : Applied 0.0 k-ft
Mn-y / Omega : Allowable 2.228 k-ft

PASS Maximum Shear Stress Ratio = **0.0** : 1
Load Combination 0.0
Location of max.above base 0.0 ft
At maximum location values are . . .
Va : Applied 0.0 k
Vn / Omega : Allowable 0.0 k

Maximum SERVICE Load Reactions . .
Top along X-X 0.0 k
Bottom along X-X 0.0 k
Top along Y-Y 0.0 k
Bottom along Y-Y 0.0 k

Maximum SERVICE Load Deflections . . .
Along Y-Y 0.0 in at 0.0 ft above base
for load combination :
Along X-X 0.0 in at 0.0 ft above base
for load combination :

Load Combination Results

Load Combination	Maximum Axial + Bending Stress Ratios			Maximum Shear Ratios		
	Stress Ratio	Status	Location	Stress Ratio	Status	Location
+D+W+H	0.555	PASS	0.00 ft	0.000	PASS	0.00 ft
+D-1.0W+H	0.028	PASS	18.50 ft	0.000	PASS	0.00 ft
+D+0.70E+H	0.404	PASS	0.00 ft	0.000	PASS	0.00 ft
+D-0.70E+H	0.019	PASS	18.50 ft	0.000	PASS	0.00 ft
+D+0.750Lr+0.750L+0.750W+H	0.429	PASS	0.00 ft	0.000	PASS	0.00 ft
+D+0.750Lr+0.750L-0.750W+H	0.021	PASS	18.50 ft	0.000	PASS	0.00 ft
+D+0.750L+0.750S+0.750W+H	0.429	PASS	0.00 ft	0.000	PASS	0.00 ft
+D+0.750L+0.750S-0.750W+H	0.021	PASS	18.50 ft	0.000	PASS	0.00 ft
+D+0.750Lr+0.750L+0.5250E+H	0.317	PASS	0.00 ft	0.000	PASS	0.00 ft
+D+0.750Lr+0.750L-0.5250E+H	0.014	PASS	18.50 ft	0.000	PASS	0.00 ft
+D+0.750L+0.750S+0.5250E+H	0.317	PASS	0.00 ft	0.000	PASS	0.00 ft
+D+0.750L+0.750S-0.5250E+H	0.014	PASS	18.50 ft	0.000	PASS	0.00 ft
+0.60D+W+H	0.533	PASS	0.00 ft	0.000	PASS	0.00 ft
+0.60D-1.0W+H	0.028	PASS	18.50 ft	0.000	PASS	0.00 ft
+0.60D+0.70E+H	0.383	PASS	0.00 ft	0.000	PASS	0.00 ft
+0.60D-0.70E+H	0.019	PASS	18.50 ft	0.000	PASS	0.00 ft

Zarosinski Engineering and Design
1400 NW 155th Circle
Vancouver, WA 98685
360-513-2746
Email: dzaro@zaroeng.com
By Dean P. Zarosinski PE

Title : General Equipment Canopy
Engineer: Dean P. Zarosinski PE
Project Desc.: Roof over Cleanout area

Job # H0065-1

Steel Column

File: C:\AA WORK\2011 PROJECTS\H0267-1 Gen Equip\Calculations\h0267-1 gen equip calcs.ec6
ENERCALC, INC. 1983-2011, Build:6.12.6.7, Ver:6.12.6.7

Lic. # : KW-06009383 **Licensee : Zarosinski Engineering and Design, Inc.**

Description : Column analysis for perimiter channel

Maximum Reactions - Unfactored

Note: Only non-zero reactions are listed.

Load Combination	X-X Axis Reaction @ Base	X-X Axis Reaction @ Top	Y-Y Axis Reaction @ Base	Y-Y Axis Reaction @ Top	Axial Reaction @ Base
W Only	k		k		2.000 k
-W Only	k		k		2.000 k
E Only	k		k		2.000 k
-E Only	k		k		2.000 k

Maximum Deflections for Load Combinations - Unfactored Loads

Load Combination	Max. X-X Deflection	Distance	Max. Y-Y Deflection	Distance
W Only	0.0000 in	0.000 ft	0.000 in	0.000 ft
-W Only	0.0000 in	0.000 ft	0.000 in	0.000 ft
E Only	0.0000 in	0.000 ft	0.000 in	0.000 ft
-E Only	0.0000 in	0.000 ft	0.000 in	0.000 ft

Steel Section Properties : C8x11.5

Depth	=	8.000 in	I xx	=	32.50 in^4	J	=	0.130 in^4
Web Thick	=	0.220 in	S xx	=	8.14 in^3			
Flange Width	=	2.260 in	R xx	=	3.110 in			
Flange Thick	=	0.390 in						
Area	=	3.370 in^2	I yy	=	1.310 in^4			
Weight	=	11.500 plf	S yy	=	0.775 in^3			
			R yy	=	0.623 in			

Ycg = 0.000 in

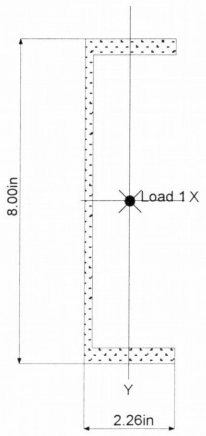

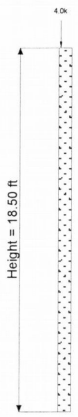

Loads are total entered value. Arrows do not reflect absolute direction.

Zarosinski Engineering and Design
1400 NW 155th Circle
Vancouver, WA 98685
360-513-2746
Email: dzaro@zaroeng.com
By Dean P. Zarosinski PE

Title : General Equipment Canopy
Engineer: Dean P. Zarosinski PE
Project Desc.: Roof over Cleanout area

Job # H0065-1

Steel Bolt Group Analysis

File: C:\AA WORK\2011 PROJECTS\H0267-1 Gen Equip\Calculations\h0267-1 gen equip calcs.ec6
ENERCALC, INC. 1983-2011, Build:6.12.6.7, Ver:6.12.6.7

Lic. # : KW-06009383 **Licensee : Zarosinski Engineering and Design, Inc.**

Description : MID COLUMN BOLTING

Code References

Calculations per, IBC 2006, CBC 2007, ASCE 7-05
Load Combination Set : 2006 IBC & ASCE 7-05

General Information

Applied Load		Load Angle	Bolt Group Centroid...	
Dead Load	3.330 k	90.00	X Distance	2.500 in
Floor Live	0.000 k	0.00	Y Distance	10.438 in
Roof Live	0.000 k	0.00	Load Eccentricity from C.B.G	
Snow	8.325 k	0.00	Y Distance	0.563 in
Wind	0.000 k	0.00	X Distance	-218.500 in
Seismic	0.000 k	0.00	Total Moment	731.12 k-in
Earth	0.000 k	0.00		
		deg CCW from +X Axis		
X Distance	-216.000 in			
Y Distance	11.000 in			

Maximum Bolt Shear Forces

		Bolt Dist. From C.B.G		Direct Shear Force		Torsional Shear Force		Final Shear
Bolt #	Load Combination	X	Y	X	Y	X	Y	
Bolt #1	+D	-2.500 in	-10.438 in	0.000 k	-0.278 k	10.118 k	-2.424 k	**10.473 k**
Bolt #2	+D	2.500 in	-10.438 in	0.000 k	-0.278 k	10.118 k	2.424 k	**10.344 k**
Bolt #3	+D	2.500 in	-6.938 in	0.000 k	-0.278 k	6.725 k	2.424 k	**7.060 k**
Bolt #4	+D	2.500 in	-3.438 in	0.000 k	-0.278 k	3.332 k	2.424 k	**3.964 k**
Bolt #5	+D+S+H	2.500 in	3.438 in	-0.694 k	-0.278 k	-3.354 k	2.439 k	**4.589 k**
Bolt #6	+D+S+H	2.500 in	6.938 in	-0.694 k	-0.278 k	-6.769 k	2.439 k	**7.769 k**
Bolt #7	+D+S+H	2.500 in	10.438 in	-0.694 k	-0.278 k	-10.184 k	2.439 k	**11.090 k**
Bolt #8	+D	-2.500 in	-6.938 in	0.000 k	-0.278 k	6.725 k	-2.424 k	**7.248 k**
Bolt #9	+D	-2.500 in	-3.438 in	0.000 k	-0.278 k	3.332 k	-2.424 k	**4.290 k**
Bolt #10	+D+S+H	-2.500 in	3.438 in	-0.694 k	-0.278 k	-3.354 k	-2.439 k	**4.875 k**
Bolt #11	+D+S+H	-2.500 in	6.938 in	-0.694 k	-0.278 k	-6.769 k	-2.439 k	**7.942 k**
Bolt #12	+D+S+H	-2.500 in	10.438 in	-0.694 k	-0.278 k	-10.184 k	-2.439 k	**11.211 k**

Zarosinski Engineering and Design
1400 NW 155th Circle
Vancouver, WA 98685
360-513-2746
Email: dzaro@zaroeng.com
By Dean P. Zarosinski PE

Title : General Equipment Canopy
Engineer: Dean P. Zarosinski PE
Project Desc.: Roof over Cleanout area

Job # H0065-1

2-D Frame Analysis

File: C:\AA WORK\2011 PROJECTS\H0267-1 Gen Equip\Calculations\h0267-1 gen equip calcs.ec6
ENERCALC, INC. 1983-2011, Build:6.12.6.7, Ver:6.12.6.7

Lic. # : KW-06009383 **Licensee : Zarosinski Engineering and Design, Inc.**

Description : Middle Frame General Equipment revised

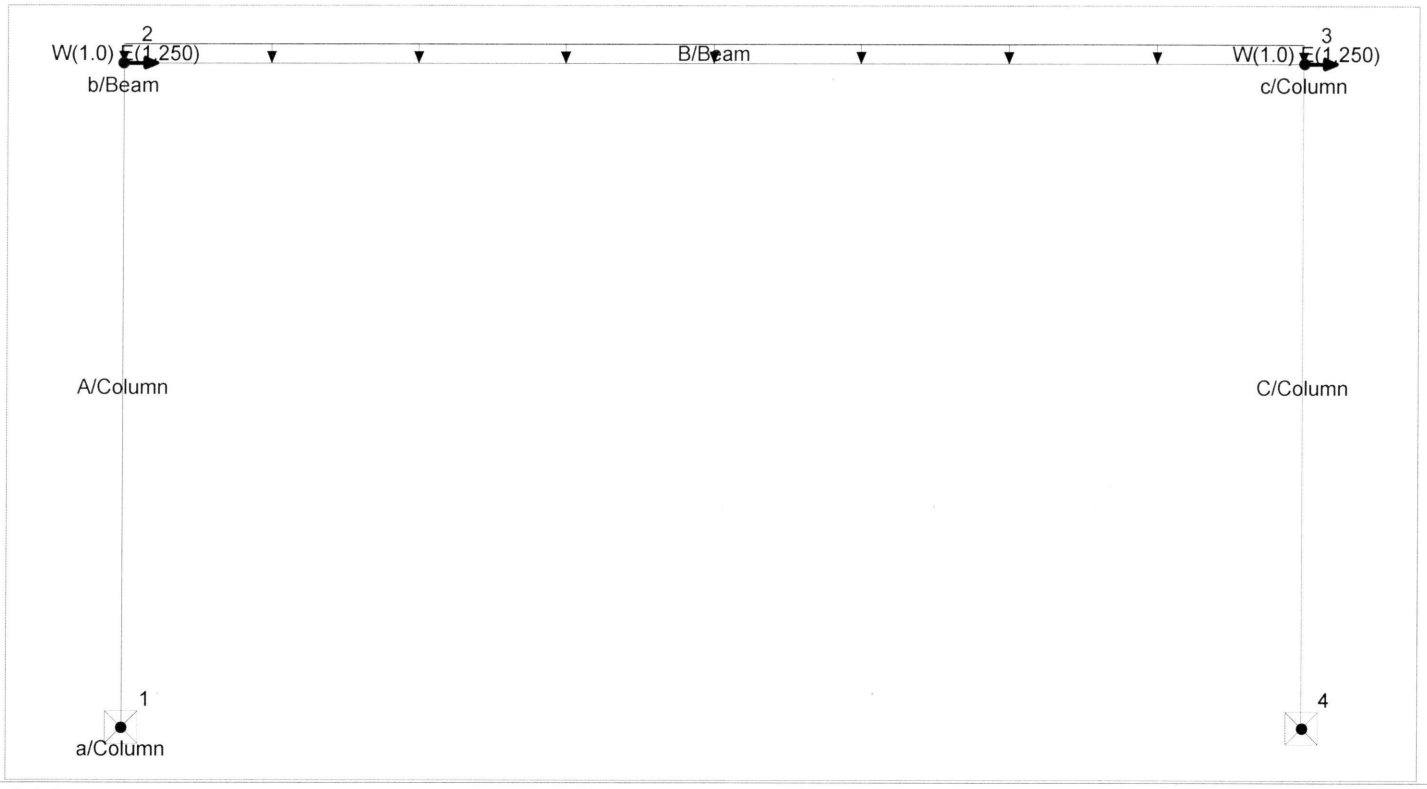

Joints...

Joint Label	Joint Coordinates X ft	Y ft	X Restraint	Y Restraint	Z Restraint	Joint Temp deg F
1	0.0	0.0	Fixed	Fixed	Fixed	0
2	0.0	20.0				0
3	36.0	20.0				0
4	36.0	0.0	Fixed	Fixed	Fixed	0

Members...

Member Label	Property Label	Endpoint Joints I Joint	J Joint	Member Length ft	I End Releases x	y	z	J End Releases x	y	z
A	Column	1	2	20.000	Fixed	Fixed	Fixed	Fixed	Fixed	Pinne
B	Beam	2	3	36.000	Fixed	Fixed	Fixed	Fixed	Fixed	Fixed
C	Column	3	4	20.000	Fixed	Fixed	Fixed	Fixed	Fixed	Pinne

Member Stress Check Data...

Member Label	Unbraced Lengths Lu : z ft	Lu : y	Slenderness Factors K : z	K : y	AISC Bending & Stability Factors Cm	Cb
A	18.000	18.000	1.00	1.00	Internal	Internal
B	36.000	36.000	1.00	1.00	Internal	Internal
C	18.000	18.000	1.00	1.00	Internal	Internal

Materials...

Member Label	Youngs ksi	Density kcf	Thermal in/degr	Yield ksi
Default	1.00	0.000	0.000000	1.00
Steel	29,000.00	0.490	0.000650	50.00

Zarosinski Engineering and Design
1400 NW 155th Circle
Vancouver, WA 98685
360-513-2746
Email: dzaro@zaroeng.com
By Dean P. Zarosinski PE

Title : General Equipment Canopy
Engineer: Dean P. Zarosinski PE
Project Desc.: Roof over Cleanout area

Job # H0065-1

2-D Frame Analysis

File: C:\AA WORK\2011 PROJECTS\H0267-1 Gen Equip\Calculations\h0267-1 gen equip calcs.ec6
ENERCALC, INC. 1983-2011, Build:6.12.6.7, Ver:6.12.6.7

Lic. # : KW-06009383 **Licensee : Zarosinski Engineering and Design, Inc.**

Description : Middle Frame General Equipment revised

Member Sections...

Prop Label	Group Tag	Material	Area	Depth	Width	Ixx	Iyy
Default	Group	Default	1.0 in^2	0.0 in	0.0 in	1.0 in^4	1.0 in^4
W12x30	Column	Steel	8.790 in^2	12.30 in	6.520 in	238.0 in^4	20.30 in^4
W30x90	Beam	Steel	26.40 in^2	29.50 in	10.40 in	3,610.0 in^4	115.0 in^4

Member Point Loads....

Member Label	Load Direction	Distance from "I" Joint	Load Magnitude Dead	Roof Live	Live	Snow	Seismic	Wind	Earth
A	Global X	20 ft					1.250	1.0	k
C	Global X	0 ft					1.250	1.0	k

Member Distributed Loads....

Member Label	Load Direction	Load Extents Start End ft		Load Magnitude Dead	Roof Live	Live	Snow	Seismic	Wind	Earth
B	Global Y	0.0	Start Mag :	0.190	0.190		0.450			k/ft
		36.0	End Mag :	0.190	0.190		0.450			k/ft

Load Combinations...

Load Combination Description	Group Multiplier	Self Weight Factors X	Y	Load Combination Factors Dead	Roof Live	Live	Snow	Seismic	Wind	Earth
+D	1.0		-1.0	1.0						
+D+L+H	1.0		-1.0	1.0		1.0				1.0
+D+Lr+H	1.0		-1.0	1.0	1.0					1.0
+D+S+H	1.0		-1.0	1.0			1.0			1.0
+D+0.750Lr+0.750L+H	1.0		-1.0	1.0	0.750	0.750				1.0
+D+0.750L+0.750S+H	1.0		-1.0	1.0		0.750	0.750			1.0
+D+W+H	1.0		-1.0	1.0					1.0	1.0
+D+0.70E+H	1.0		-1.0	1.0				0.70		1.0
+D+0.750Lr+0.750L+0.750W+H	1.0		-1.0	1.0	0.750	0.750			0.750	1.0
+D+0.750L+0.750S+0.750W+H	1.0		-1.0	1.0		0.750	0.750		0.750	1.0
+D+0.750Lr+0.750L+0.5250E+H	1.0		-1.0	1.0	0.750	0.750		0.5250		1.0
+D+0.750L+0.750S+0.5250E+H	1.0		-1.0	1.0		0.750	0.750	0.5250		1.0
+0.60D+W+H	1.0		-1.0	0.60					1.0	1.0
+0.60D+0.70E+H	1.0		-1.0	0.60				0.70		1.0
+1.40D	1.0		-1.0	1.40						
+1.20D+0.50Lr+1.60L+1.60H	1.0		-1.0	1.20	0.50	1.60				1.60
+1.20D+1.60L+0.50S+1.60H	1.0		-1.0	1.20		1.60	0.50			1.60
+1.20D+1.60Lr+0.50L	1.0		-1.0	1.20	1.60	0.50				
+1.20D+1.60Lr+0.80W	1.0		-1.0	1.20	1.60				0.80	
+1.20D+0.50L+1.60S	1.0		-1.0	1.20		0.50	1.60			
+1.20D+1.60S+0.80W	1.0		-1.0	1.20			1.60		0.80	
+1.20D+0.50Lr+0.50L+1.60W	1.0		-1.0	1.20	0.50	0.50			1.60	
+1.20D+0.50L+0.50S+1.60W	1.0		-1.0	1.20		0.50	0.50		1.60	
+1.20D+0.50L+0.20S+E	1.0		-1.0	1.20		0.50	0.20	1.0		
+0.90D+1.60W+1.60H	1.0		-1.0	0.90					1.60	1.60
+0.90D+E+1.60H	1.0		-1.0	0.90				1.0		1.60

Extreme Joint Displacements & Reactions

Only Load Combinations giving maximum values are listed

Joint Label		Joint Displacements X in	Y in	Z Radians	Joint Reactions X k	Y k	Z k-ft
1		0.0	0.0	0.0	0.4705	19.018	31.439
	Max	+0.90D+1.60W+1.60H	+0.60D+W+H	+1.20D+0.50L+1.60S	+1.20D+0.50L+1.60S	+1.20D+0.50L+1.60S	+0.90D+1.60W+1.60H
		0.0	0.0	0.0	-1.572	3.692	-9.410
	Min	+1.20D+0.50L+1.60S	+1.20D+0.50L+1.60S	+0.90D+1.60W+1.60H	+0.90D+1.60W+1.60H	+0.60D+W+H	+1.20D+0.50L+1.60S
2		1.049	-0.003194	-0.000377			
	Max	+0.90D+1.60W+1.60H	+0.60D+W+H	+0.60D+W+H			
		-0.3141	-0.01762	-0.002699			
	Min	+1.20D+0.50L+1.60S	+1.20D+0.50L+1.60S	+1.20D+0.50L+1.60S			
3		1.049	-0.004216	0.002619			
	Max	+0.90D+1.60W+1.60H	+0.60D+0.70E+H	+1.20D+0.50L+1.60S			

Zarosinski Engineering and Design
1400 NW 155th Circle
Vancouver, WA 98685
360-513-2746
Email: dzaro@zaroeng.com
By Dean P. Zarosinski PE

Title : General Equipment Canopy
Engineer: Dean P. Zarosinski PE
Project Desc.: Roof over Cleanout area

Job # H0065-1

2-D Frame Analysis

File: C:\AA WORK\2011 PROJECTS\H0267-1 Gen Equip\Calculations\h0267-1 gen equip calcs.ec6
ENERCALC, INC. 1983-2011, Build:6.12.6.7, Ver:6.12.6.7

Lic. # : KW-06009383 **Licensee : Zarosinski Engineering and Design, Inc.**

Description : Middle Frame General Equipment revised

Extreme Joint Displacements & Reactions

Only Load Combinations giving maximum values are listed

Joint Label		Joint Displacements X in	Y in	Z Radians	Joint Reactions X k	Y k	Z k-ft
	Min	-0.3144	-0.01851	0.000156			
		+1.20D+0.50L+1.60S	+1.20D+1.60S+0.80W	+0.90D+1.60W+1.60H			
4		0.0	0.0	0.0	-0.1269	19.960	
	Max	.20D+0.50L+0.50S+1.60W	+0.60D+0.70E+H		+D	+1.20D+1.60S+0.80W	
		0.0	0.0	0.0	-1.756	4.777	
	Min	+D	+1.20D+1.60S+0.80W		.20D+0.50L+0.50S+1.60W	+0.60D+0.70E+H	

Extreme Member End Forces

Only Load Combinations giving maximum values are listed

Member Label		Member " I " End Forces Axial k	Shear k	Moment k-ft	Member " J " End Forces Axial k	Shear k	Moment k-ft
A		19.018	1.572	31.439	-3.093	0.4705	0.0
	Max	+1.20D+0.50L+1.60S	+0.90D+1.60W+1.60H	+0.90D+1.60W+1.60H	+0.60D+W+H	+1.20D+0.50L+1.60S	+0.90D+E+1.60H
A		3.692	-0.4705	-9.410	-18.420	-1.298	0.0
	Min	+0.60D+W+H	+1.20D+0.50L+1.60S	+1.20D+0.50L+1.60S	+1.20D+0.50L+1.60S	+0.90D+E+1.60H	+0.90D+E+1.60H
B		5.416	18.420	25.955	-0.02804	19.362	0.0
	Max	+0.90D+E+1.60H	+1.20D+0.50L+1.60S	+0.90D+E+1.60H	+0.90D+1.60W+1.60H	+1.20D+1.60S+0.80W	+0.90D+E+1.60H
B		0.02804	0.04777	0.0	-6.014	-1.298	-35.118
	Min	+0.90D+1.60W+1.60H	+0.90D+E+1.60H	+D+0.750L+0.750S+H	+0.90D+E+1.60H	+0.90D+E+1.60H	.20D+0.50L+0.50S+1.60W
C		19.362	0.4705	35.118	-4.777	-0.1269	0.0
	Max	+1.20D+1.60S+0.80W	+1.20D+0.50L+1.60S	.20D+0.50L+0.50S+1.60W	+0.60D+0.70E+H	+D	+0.90D+E+1.60H
C		4.179	0.02804	2.537	-19.960	-1.756	0.0
	Min	+0.60D+0.70E+H	+0.90D+1.60W+1.60H	+D	+1.20D+1.60S+0.80W	.20D+0.50L+0.50S+1.60W	+0.90D+E+1.60H

Extreme Member Forces

Only Load Combinations giving maximum values are listed

Mmbr Label		Axial	Dist from "I" Joint	Moment	Dist from "I" Joint	Shear	Dist from "I" Joint
A		-3.093 k	20.0 ft	31.439 k-ft	0.0 ft	1.572 k	0.0 ft
	Max	+0.60D+W+H		+0.90D+1.60W+1.60H		+0.90D+1.60W+1.60H	
		-19.018 k	0.0 ft	-9.410 k-ft	0.0 ft	-0.4705 k	0.0 ft
	Min	+1.20D+0.50L+1.60S		+1.20D+0.50L+1.60S		+1.20D+0.50L+1.60S	
B		-0.02804 k	0.0 ft	35.118 k-ft	36.0 ft	18.420 k	0.0 ft
	Max	+0.90D+1.60W+1.60H		+1.20D+0.50L+0.50S+1.60W		+1.20D+0.50L+1.60S	
		-0.4705 k	0.0 ft	-163.45 k-ft	17.633 ft	-19.362 k	36.0 ft
	Min	+1.20D+0.50L+1.60S		+1.20D+0.50L+1.60S		+1.20D+1.60S+0.80W	
C		-4.179 k	0.0 ft	35.118 k-ft	0.0 ft	1.756 k	0.0 ft
	Max	+0.60D+0.70E+H		+1.20D+0.50L+0.50S+1.60W		+1.20D+0.50L+0.50S+1.60W	
		-19.960 k	20.0 ft	0.0 k-ft	20.0 ft	0.1269 k	0.0 ft
	Min	+1.20D+1.60S+0.80W		+D		+D	

Zarosinski Engineering and Design
1400 NW 155th Circle
Vancouver, WA 98685
360-513-2746
Email: dzaro@zaroeng.com
By Dean P. Zarosinski PE

Title : General Equipment Canopy
Engineer: Dean P. Zarosinski PE
Project Desc.: Roof over Cleanout area

Job # H0065-1

2-D Frame Analysis

File: C:\AA WORK\2011 PROJECTS\H0267-1 Gen Equip\Calculations\h0267-1 gen equip calcs.ec6
ENERCALC, INC. 1983-2011, Build:6.12.6.7, Ver:6.12.6.7

Lic. # : KW-06009383 **Licensee : Zarosinski Engineering and Design, Inc.**

Description : End Frame General Equipment revised

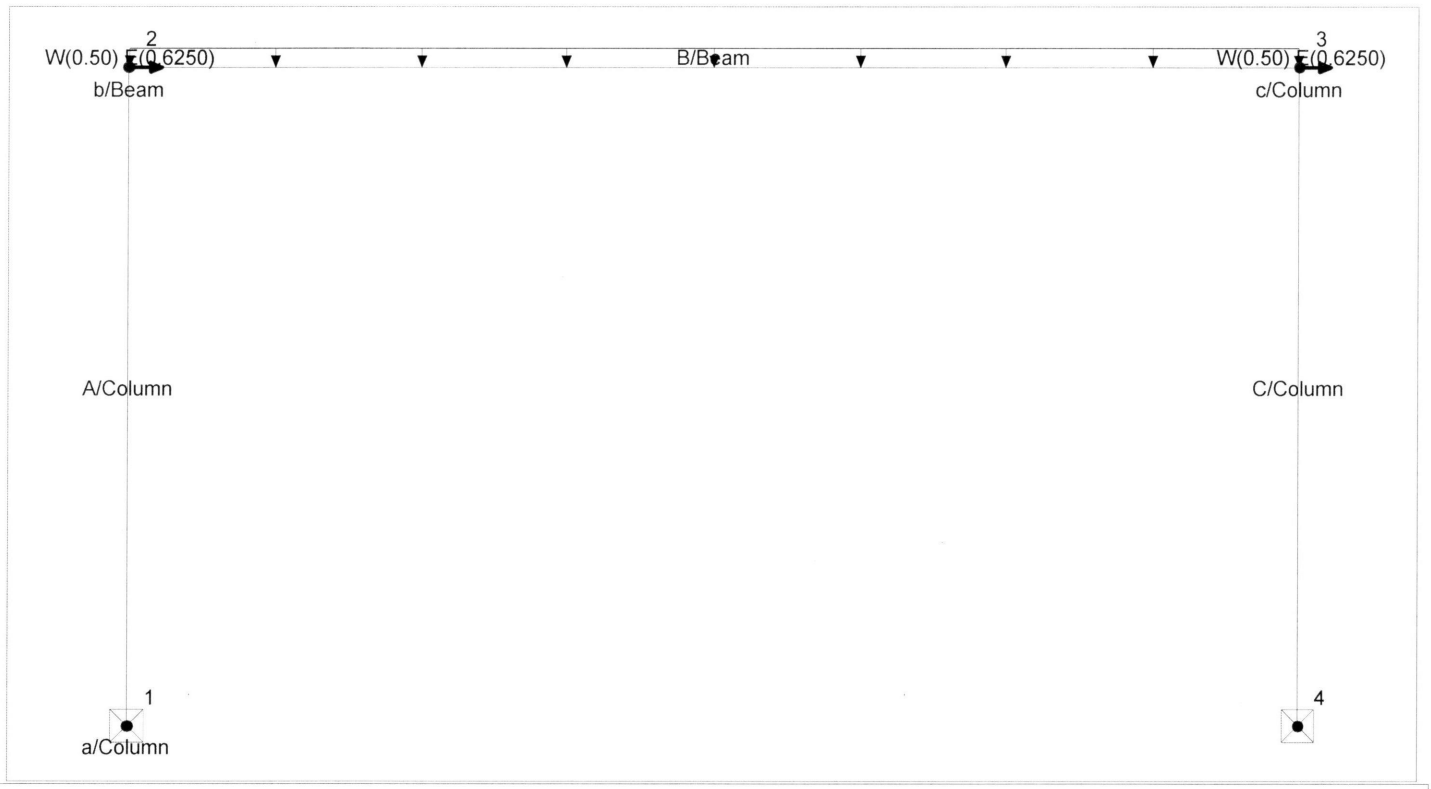

Joints...

Joint Label	Joint Coordinates X ft	Y ft	X Restraint	Y Restraint	Z Restraint	Joint Temp deg F
1	0.0	0.0	Fixed	Fixed	Fixed	0
2	0.0	20.0				0
3	36.0	20.0				0
4	36.0	0.0	Fixed	Fixed	Fixed	0

Members...

Member Label	Property Label	Endpoint Joints I Joint	J Joint	Member Length ft	I End Releases x	y	z	J End Releases x	y	z
A	Column	1	2	20.000	Fixed	Fixed	Fixed	Fixed	Fixed	Pinne
B	Beam	2	3	36.000	Fixed	Fixed	Fixed	Fixed	Fixed	Fixed
C	Column	3	4	20.000	Fixed	Fixed	Fixed	Fixed	Fixed	Pinne

Member Stress Check Data...

Member Label	Unbraced Lengths Lu : z ft	Lu : y	Slenderness Factors K : z	K : y	AISC Bending & Stability Factors Cm	Cb
A	18.000	18.000	1.00	1.00	Internal	Internal
B	36.000	36.000	1.00	1.00	Internal	Internal
C	18.000	18.000	1.00	1.00	Internal	Internal

Materials...

Member Label	Youngs ksi	Density kcf	Thermal in/degr	Yield ksi
Default	1.00	0.000	0.000000	1.00
Steel	29,000.00	0.490	0.000650	50.00

Zarosinski Engineering and Design
1400 NW 155th Circle
Vancouver, WA 98685
360-513-2746
Email: dzaro@zaroeng.com
By Dean P. Zarosinski PE

Title : General Equipment Canopy
Engineer: Dean P. Zarosinski PE
Project Desc.: Roof over Cleanout area

Job # H0065-1

2-D Frame Analysis

File: C:\AA WORK\2011 PROJECTS\H0267-1 Gen Equip\Calculations\h0267-1 gen equip calcs.ec6
ENERCALC, INC. 1983-2011, Build:6.12.6.7, Ver:6.12.6.7

Lic. # : KW-06009383 **Licensee : Zarosinski Engineering and Design, Inc.**

Description : End Frame General Equipment revised

Member Sections...

Prop Label	Group Tag	Material	Area	Depth	Width	Ixx	Iyy
Default	Group	Default	1.0 in^2	0.0 in	0.0 in	1.0 in^4	1.0 in^4
W12x30	Column	Steel	8.790 in^2	12.30 in	6.520 in	238.0 in^4	20.30 in^4
W30x90	Beam	Steel	26.40 in^2	29.50 in	10.40 in	3,610.0 in^4	115.0 in^4

Member Point Loads....

Member Label	Load Direction	Distance from "I" Joint	Load Magnitude Dead	Roof Live	Live	Snow	Seismic	Wind	Earth
A	Global X	20 ft					0.6250	0.50	k
C	Global X	0 ft					0.6250	0.50	k

Member Distributed Loads....

Member Label	Load Direction	Load Extents Start / End ft		Load Magnitude Dead	Roof Live	Live	Snow	Seismic	Wind	Earth
B	Global Y	0.0	Start Mag :	0.10	0.10		0.2250			k/ft
		36.0	End Mag :	0.10	0.10		0.2250			k/ft

Load Combinations...

Load Combination Description	Group Multiplier	Self Weight Factors X	Y	Load Combination Factors Dead	Roof Live	Live	Snow	Seismic	Wind	Earth
+D	1.0		-1.0	1.0						
+D+L+H	1.0		-1.0	1.0		1.0				1.0
+D+Lr+H	1.0		-1.0	1.0	1.0					1.0
+D+S+H	1.0		-1.0	1.0			1.0			1.0
+D+0.750Lr+0.750L+H	1.0		-1.0	1.0	0.750	0.750				1.0
+D+0.750L+0.750S+H	1.0		-1.0	1.0		0.750	0.750			1.0
+D+W+H	1.0		-1.0	1.0					1.0	1.0
+D+0.70E+H	1.0		-1.0	1.0				0.70		1.0
+D+0.750Lr+0.750L+0.750W+H	1.0		-1.0	1.0	0.750	0.750			0.750	1.0
+D+0.750L+0.750S+0.750W+H	1.0		-1.0	1.0		0.750	0.750		0.750	1.0
+D+0.750Lr+0.750L+0.5250E+H	1.0		-1.0	1.0	0.750	0.750		0.5250		1.0
+D+0.750L+0.750S+0.5250E+H	1.0		-1.0	1.0		0.750	0.750	0.5250		1.0
+0.60D+W+H	1.0		-1.0	0.60					1.0	1.0
+0.60D+0.70E+H	1.0		-1.0	0.60				0.70		1.0
+1.40D	1.0		-1.0	1.40						
+1.20D+0.50Lr+1.60L+1.60H	1.0		-1.0	1.20	0.50	1.60				1.60
+1.20D+1.60L+0.50S+1.60H	1.0		-1.0	1.20		1.60	0.50			1.60
+1.20D+1.60Lr+0.50L	1.0		-1.0	1.20	1.60	0.50				
+1.20D+1.60Lr+0.80W	1.0		-1.0	1.20	1.60				0.80	
+1.20D+0.50L+1.60S	1.0		-1.0	1.20		0.50	1.60			
+1.20D+1.60S+0.80W	1.0		-1.0	1.20			1.60		0.80	
+1.20D+0.50Lr+0.50L+1.60W	1.0		-1.0	1.20	0.50	0.50			1.60	
+1.20D+0.50L+0.50S+1.60W	1.0		-1.0	1.20		0.50	0.50		1.60	
+1.20D+0.50L+0.20S+E	1.0		-1.0	1.20		0.50	0.20	1.0		
+0.90D+1.60W+1.60H	1.0		-1.0	0.90					1.60	1.60
+0.90D+E+1.60H	1.0		-1.0	0.90				1.0		1.60

Extreme Joint Displacements & Reactions

Only Load Combinations giving maximum values are listed

Joint Label		Joint Displacements X in	Y in	Z Radians	Joint Reactions X k	Y k	Z k-ft
1		0.0	0.0	0.0	0.2583	10.712	15.272
	Max	+0.90D+1.60W+1.60H	+0.60D+W+H	+1.20D+0.50L+1.60S	+1.20D+0.50L+1.60S	+1.20D+0.50L+1.60S	+0.90D+1.60W+1.60H
		0.0	0.0	0.0	-0.7636	2.995	-5.166
	Min	+1.20D+0.50L+1.60S	+1.20D+0.50L+1.60S	+0.90D+1.60W+1.60H	+0.90D+1.60W+1.60H	+0.60D+W+H	+1.20D+0.50L+1.60S
2		0.5098	-0.002539	-0.000313			
	Max	+0.90D+1.60W+1.60H	+0.60D+W+H	+0.60D+W+H			
		-0.1725	-0.009804	-0.001482			
	Min	+1.20D+0.50L+1.60S	+1.20D+0.50L+1.60S	+1.20D+0.50L+1.60S			
3		0.5098	-0.003072	0.001438			
	Max	+0.90D+1.60W+1.60H	+0.60D+0.70E+H	+1.20D+0.50L+1.60S			

Zarosinski Engineering and Design
1400 NW 155th Circle
Vancouver, WA 98685
360-513-2746
Email: dzaro@zaroeng.com
By Dean P. Zarosinski PE

Title : General Equipment Canopy
Engineer: Dean P. Zarosinski PE
Project Desc.: Roof over Cleanout area

Job # H0065-1

2-D Frame Analysis

File: C:\AA WORK\2011 PROJECTS\H0267-1 Gen Equip\Calculations\h0267-1 gen equip calcs.ec6
ENERCALC, INC. 1983-2011, Build:6.12.6.7, Ver:6.12.6.7

Lic. # : KW-06009383 **Licensee : Zarosinski Engineering and Design, Inc.**

Description : End Frame General Equipment revised

Extreme Joint Displacements & Reactions

Only Load Combinations giving maximum values are listed

Joint Label		Joint Displacements X in	Joint Displacements Y in	Joint Displacements Z Radians	Joint Reactions X k	Joint Reactions Y k	Joint Reactions Z k-ft
	Min	-0.1726	-0.01027	0.000203			
		+1.20D+0.50L+1.60S	+1.20D+1.60S+0.80W	+0.90D+1.60W+1.60H			
4		0.0	0.0	0.0	-0.08606	11.208	
	Max	.20D+0.50L+0.50S+1.60W	+0.60D+0.70E+H		+D	+1.20D+1.60S+0.80W	
		0.0	0.0	0.0	-0.9010	3.562	
	Min	+D	+1.20D+1.60S+0.80W		.20D+0.50L+0.50S+1.60W	+0.60D+0.70E+H	

Extreme Member End Forces

Only Load Combinations giving maximum values are listed

Member Label		Member " I " End Forces Axial k	Member " I " End Forces Shear k	Member " I " End Forces Moment k-ft	Member " J " End Forces Axial k	Member " J " End Forces Shear k	Member " J " End Forces Moment k-ft
A		10.712	0.7636	15.272	-2.397	0.2583	0.0
	Max	+1.20D+0.50L+1.60S	+0.90D+1.60W+1.60H	+0.90D+1.60W+1.60H	+0.60D+W+H	+1.20D+0.50L+1.60S	+0.90D+E+1.60H
A		2.995	-0.2583	-5.166	-10.113	-0.6713	0.0
	Min	+0.60D+W+H	+1.20D+0.50L+1.60S	+1.20D+0.50L+1.60S	+1.20D+0.50L+1.60S	+0.90D+E+1.60H	+0.90D+E+1.60H
B		3.610	10.113	13.426	-0.03642	10.610	0.0
	Max	+0.90D+E+1.60H	+1.20D+0.50L+1.60S	+0.90D+E+1.60H	+0.90D+1.60W+1.60H	+1.20D+1.60S+0.80W	+0.90D+E+1.60H
B		0.03642	0.04629	0.0	-4.208	-0.6713	-18.020
	Min	+0.90D+1.60W+1.60H	+0.90D+E+1.60H	+1.20D+0.50L+1.60S	+0.90D+E+1.60H	+0.90D+E+1.60H	.20D+0.50L+0.50S+1.60W
C		10.610	0.2583	18.020	-3.562	-0.08606	0.0
	Max	+1.20D+1.60S+0.80W	+1.20D+0.50L+1.60S	.20D+0.50L+0.50S+1.60W	+0.60D+0.70E+H	+D	+0.90D+E+1.60H
C		2.964	0.03642	1.721	-11.208	-0.9010	0.0
	Min	+0.60D+0.70E+H	+0.90D+1.60W+1.60H	+D	+1.20D+1.60S+0.80W	.20D+0.50L+0.50S+1.60W	+0.90D+E+1.60H

Extreme Member Forces

Only Load Combinations giving maximum values are listed

Mmbr Label		Axial	Dist from "I" Joint	Moment	Dist from "I" Joint	Shear	Dist from "I" Joint
A		-2.397 k	20.0 ft	15.272 k-ft	0.0 ft	0.7636 k	0.0 ft
	Max	+0.60D+W+H		+0.90D+1.60W+1.60H		+0.90D+1.60W+1.60H	
		-10.712 k	0.0 ft	-5.166 k-ft	0.0 ft	-0.2583 k	0.0 ft
	Min	+1.20D+0.50L+1.60S		+1.20D+0.50L+1.60S		+1.20D+0.50L+1.60S	
B		-0.03642 k	0.0 ft	18.020 k-ft	36.0 ft	10.113 k	0.0 ft
	Max	+0.90D+1.60W+1.60H		+1.20D+0.50L+0.50S+1.60W		+1.20D+0.50L+1.60S	
		-0.2583 k	0.0 ft	-89.744 k-ft	17.633 ft	-10.610 k	36.0 ft
	Min	+1.20D+0.50L+1.60S		+1.20D+0.50L+1.60S		+1.20D+1.60S+0.80W	
C		-2.964 k	0.0 ft	18.020 k-ft	0.0 ft	0.9010 k	0.0 ft
	Max	+0.60D+0.70E+H		+1.20D+0.50L+0.50S+1.60W		+1.20D+0.50L+0.50S+1.60W	
		-11.208 k	20.0 ft	0.0 k-ft	20.0 ft	0.08606 k	0.0 ft
	Min	+1.20D+1.60S+0.80W		+D		+D	

Zarosinski Engineering and Design
1400 NW 155th Circle
Vancouver, WA 98685
360-513-2746
Email: dzaro@zaroeng.com
By Dean P. Zarosinski PE

Title : General Equipment Canopy
Engineer: Dean P. Zarosinski PE
Project Desc.: Roof over Cleanout area

Job # H0065-1

General Footing

File: C:\AA WORK\2011 PROJECTS\H0267-1 Gen Equip\Calculations\h0267-1 gen equip calcs.ec6
ENERCALC, INC. 1983-2011, Build:6.12.6.7, Ver:6.12.6.7

Lic. # : KW-06009383 **Licensee : Zarosinski Engineering and Design, Inc.**

Description : Footing at mid bay

Code References

Calculations per ACI 318-05, IBC 2006, CBC 2007, ASCE 7-05
Load Combinations Used : 2006 IBC & ASCE 7-05

General Information

Material Properties

f'c : Concrete 28 day strength	=	3.0	ksi
fy : Rebar Yield	=	60.0	ksi
Ec : Concrete Elastic Modulus	=	3,122.0	ksi
Concrete Density	=	145.0	pcf
φ Values Flexure	=	0.90	
Shear	=	0.750	

Analysis Settings

Min Steel % Bending Reinf.	=	0.00140	
Min Allow % Temp Reinf.	=	0.00180	
Min. Overturning Safety Factor	=	1.0 : 1	
Min. Sliding Safety Factor	=	1.0 : 1	
Add Ftg Wt for Soil Pressure	:	Yes	
Use ftg wt for stability, moments & shears	:	Yes	
Include Pedestal Weight as DL	:	No	

Soil Design Values

Allowable Soil Bearing	=	2.0	ksf
Increase Bearing By Footing Weight	=	No	
Soil Passive Resistance (for Sliding)	=	250.0	pcf
Soil/Concrete Friction Coeff.	=	0.30	

Increases based on footing Depth
Footing base depth below soil surface = ft
Allowable pressure increase per foot of deptl = ksf
when footing base is below = ft

Increases based on footing plan dimension
Allowable pressure increase per foot of dept = ksf
when maximum length or width is greater = ft

Dimensions

Width parallel to X-X Axis	=	5.250	ft
Length parallel to Z-Z Axis	=	5.250	ft
Footing Thicknes	=	19.0	in

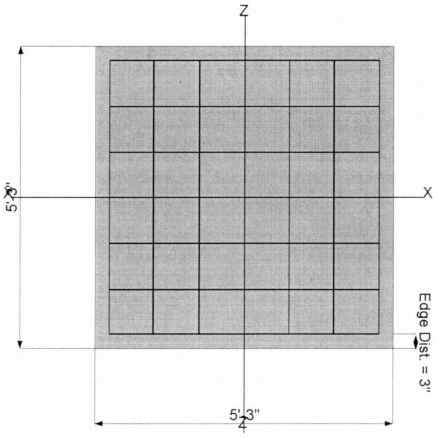

Pedestal dimensions...
px : parallel to X-X Axis = in
pz : parallel to Z-Z Axis = in
Height = in
Rebar Centerline to Edge of Concrete..
at Bottom of footing = 3.0 in

Reinforcing

Bars parallel to X-X Axis
Number of Bars = 7.0
Reinforcing Bar Size = # 5

Bars parallel to Z-Z Axis
Number of Bars = 7.0
Reinforcing Bar Size = # 5

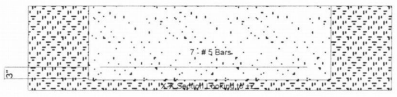

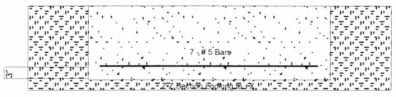

Bandwidth Distribution Check (ACI 15.4.4.2)

Direction Requiring Closer Separation	n/a
# Bars required within zone	n/a
# Bars required on each side of zone	n/a

Applied Loads

		D	Lr	L	S	W	E	H	
P : Column Load	=	6.0	4.0		10.0				k
OB : Overburden	=								ksf
M-xx	=								k-ft
M-zz	=						22.780		k-ft
V-x	=								k
V-z	=								k

Zarosinski Engineering and Design
1400 NW 155th Circle
Vancouver, WA 98685
360-513-2746
Email: dzaro@zaroeng.com
By Dean P. Zarosinski PE

Title : General Equipment Canopy
Engineer: Dean P. Zarosinski PE
Project Desc.: Roof over Cleanout area

Job # H0065-1

General Footing

File: C:\AA WORK\2011 PROJECTS\H0267-1 Gen Equip\Calculations\h0267-1 gen equip calcs.ec6
ENERCALC, INC. 1983-2011, Build:6.12.6.7, Ver:6.12.6.7

Lic. # : KW-06009383 **Licensee : Zarosinski Engineering and Design, Inc.**

Description : Footing at mid bay

DESIGN SUMMARY

Design OK

	Min. Ratio	Item	Applied	Capacity	Governing Load Combination
PASS	0.9760	Soil Bearing	1.952 ksf	2.0 ksf	+0.60D+0.70E+H
PASS	n/a	Overturning - X-X	0.0 k-ft	0.0 k-ft	No Overturning
PASS	1.218	Overturning - Z-Z	15.946 k-ft	19.416 k-ft	0.6D+0.7E
PASS	n/a	Sliding - X-X	0.0 k	0.0 k	No Sliding
PASS	n/a	Sliding - Z-Z	0.0 k	0.0 k	No Sliding
PASS	n/a	Uplift	0.0 k	0.0 k	No Uplift
PASS	0.1250	Z Flexure (+X)	3.626 k-ft	29.006 k-ft	+0.90D+E+1.60H
PASS	0.02454	Z Flexure (-X)	0.7118 k-ft	29.006 k-ft	+0.90D+E+1.60H
PASS	0.09996	X Flexure (+Z)	2.899 k-ft	29.006 k-ft	+1.20D+0.50L+1.60S
PASS	0.02327	X Flexure (-Z)	0.6749 k-ft	29.006 k-ft	+0.90D+E+1.60H
PASS	0.06723	1-way Shear (+X)	5.524 psi	82.158 psi	+1.20D+0.50L+1.60S
PASS	0.06723	1-way Shear (-X)	5.524 psi	82.158 psi	+1.20D+0.50L+1.60S
PASS	0.06723	1-way Shear (+Z)	5.524 psi	82.158 psi	+1.20D+0.50L+1.60S
PASS	0.06723	1-way Shear (-Z)	5.524 psi	82.158 psi	+1.20D+0.50L+1.60S
PASS	0.1290	2-way Punching	21.202 psi	164.317 psi	+1.20D+0.50L+1.60S

Detailed Results

Soil Bearing

Rotation Axis & Load Combination...	Gross Allowable	Xecc	Zecc	+Z	Actual Soil Bearing Stress +Z	-X	-X	Actual / Allowable Ratio
X-X, +D	2.0	n/a	0.0	0.4473	0.4473	n/a	n/a	0.224
X-X, +D+Lr+H	2.0	n/a	0.0	0.5924	0.5924	n/a	n/a	0.296
X-X, +D+S+H	2.0	n/a	0.0	0.8101	0.8101	n/a	n/a	0.405
X-X, +D+0.750Lr+0.750L+H	2.0	n/a	0.0	0.5561	0.5561	n/a	n/a	0.278
X-X, +D+0.750L+0.750S+H	2.0	n/a	0.0	0.7194	0.7194	n/a	n/a	0.360
X-X, +D+0.70E+H	2.0	n/a	0.0	0.4473	0.4473	n/a	n/a	0.224
X-X, +D+0.750Lr+0.750L+0.750W+H	2.0	n/a	0.0	0.5561	0.5561	n/a	n/a	0.278
X-X, +D+0.750L+0.750S+0.750W+H	2.0	n/a	0.0	0.7194	0.7194	n/a	n/a	0.360
X-X, +D+0.750Lr+0.750L+0.5250E+H	2.0	n/a	0.0	0.5561	0.5561	n/a	n/a	0.278
X-X, +D+0.750L+0.750S+0.5250E+H	2.0	n/a	0.0	0.7194	0.7194	n/a	n/a	0.360
X-X, +0.60D+0.70E+H	2.0	n/a	0.0	0.2684	0.2684	n/a	n/a	0.134
Z-Z, +D	2.0	0.0	n/a	n/a	n/a	0.4473	0.4473	0.224
Z-Z, +D+Lr+H	2.0	0.0	n/a	n/a	n/a	0.5924	0.5924	0.296
Z-Z, +D+S+H	2.0	0.0	n/a	n/a	n/a	0.8101	0.8101	0.405
Z-Z, +D+0.750Lr+0.750L+H	2.0	0.0	n/a	n/a	n/a	0.5561	0.5561	0.278
Z-Z, +D+0.750L+0.750S+H	2.0	0.0	n/a	n/a	n/a	0.7194	0.7194	0.360
Z-Z, +D+0.70E+H	2.0	15.522	n/a	n/a	n/a	0.0	1.165	0.583
Z-Z, +D+0.750Lr+0.750L+0.750W+H	2.0	0.0	n/a	n/a	n/a	0.5561	0.5561	0.278
Z-Z, +D+0.750L+0.750S+0.750W+H	2.0	0.0	n/a	n/a	n/a	0.7194	0.7194	0.360
Z-Z, +D+0.750Lr+0.750L+0.5250E+H	2.0	9.363	n/a	n/a	n/a	0.06684	1.045	0.523
Z-Z, +D+0.750L+0.750S+0.5250E+H	2.0	7.238	n/a	n/a	n/a	0.2301	1.209	0.605
Z-Z, +0.60D+0.70E+H	2.0	25.870	n/a	n/a	n/a	0.0	1.952	0.976

Overturning Stability

Rotation Axis & Load Combination...	Overturning Moment	Resisting Moment	Stability Ratio	Status
X-X, D	None	0.0 k-ft	Infinity	OK
X-X, D+Lr	None	0.0 k-ft	Infinity	OK
X-X, D+S	None	0.0 k-ft	Infinity	OK
X-X, 0.6D+0.7E	None	0.0 k-ft	Infinity	OK
Z-Z, D	None	0.0 k-ft	Infinity	OK
Z-Z, D+Lr	None	0.0 k-ft	Infinity	OK
Z-Z, D+S	None	0.0 k-ft	Infinity	OK
Z-Z, 0.6D+0.7E	15.946 k-ft	19.416 k-ft	1.218	OK

Sliding Stability

All units k

Force Application Axis Load Combination...	Sliding Force	Resisting Force	Sliding SafetyRatio	Status

Footing Has NO Sliding

Zarosinski Engineering and Design
1400 NW 155th Circle
Vancouver, WA 98685
360-513-2746
Email: dzaro@zaroeng.com
By Dean P. Zarosinski PE

Title : General Equipment Canopy
Engineer: Dean P. Zarosinski PE
Project Desc.: Roof over Cleanout area

Job # H0065-1

General Footing

File: C:\AA WORK\2011 PROJECTS\H0267-1 Gen Equip\Calculations\h0267-1 gen equip calcs.ec6
ENERCALC, INC. 1983-2011, Build:6.12.6.7, Ver:6.12.6.7

Lic. # : KW-06009383 **Licensee : Zarosinski Engineering and Design, Inc.**

Description : Footing at mid bay

Footing Flexure

Flexure Axis & Load Combination	Mu k-ft	Which Side ?	Tension @ Bot. or Top ?	As Req'd in^2	Gvrn. As in^2	Actual As in^2	Phi*Mn k-ft	Status
X-X, +1.40D	0498133333333	+Z	Bottom	0.4104	Min Temp %	0.41333333333339	.006274509803	OK
X-X, +1.40D	0498133333333	-Z	Bottom	0.4104	Min Temp %	0.41333333333339	.006274509803	OK
X-X, +1.20D+0.50Lr+1.60L+1.60H	1497955555555	+Z	Bottom	0.4104	Min Temp %	0.41333333333339	.006274509803	OK
X-X, +1.20D+0.50Lr+1.60L+1.60H	1497955555555	-Z	Bottom	0.4104	Min Temp %	0.41333333333339	.006274509803	OK
X-X, +1.20D+1.60L+0.50S+1.60H	5247288888888	+Z	Bottom	0.4104	Min Temp %	0.41333333333339	.006274509803	OK
X-X, +1.20D+1.60L+0.50S+1.60H	5247288888888	-Z	Bottom	0.4104	Min Temp %	0.41333333333339	.006274509803	OK
X-X, +1.20D+1.60Lr+0.50L	6996977777777	+Z	Bottom	0.4104	Min Temp %	0.41333333333339	.006274509803	OK
X-X, +1.20D+1.60Lr+0.50L	6996977777777	-Z	Bottom	0.4104	Min Temp %	0.41333333333339	.006274509803	OK
X-X, +1.20D+1.60Lr+0.80W	6996977777777	+Z	Bottom	0.4104	Min Temp %	0.41333333333339	.006274509803	OK
X-X, +1.20D+1.60Lr+0.80W	6996977777777	-Z	Bottom	0.4104	Min Temp %	0.41333333333339	.006274509803	OK
X-X, +1.20D+0.50L+1.60S	8994844444444	+Z	Bottom	0.4104	Min Temp %	0.41333333333339	.006274509803	OK
X-X, +1.20D+0.50L+1.60S	8994844444444	-Z	Bottom	0.4104	Min Temp %	0.41333333333339	.006274509803	OK
X-X, +1.20D+1.60S+0.80W	8994844444444	+Z	Bottom	0.4104	Min Temp %	0.41333333333339	.006274509803	OK
X-X, +1.20D+1.60S+0.80W	8994844444444	-Z	Bottom	0.4104	Min Temp %	0.41333333333339	.006274509803	OK
X-X, +1.20D+0.50Lr+0.50L+1.60W	1497955555555	+Z	Bottom	0.4104	Min Temp %	0.41333333333339	.006274509803	OK
X-X, +1.20D+0.50Lr+0.50L+1.60W	1497955555555	-Z	Bottom	0.4104	Min Temp %	0.41333333333339	.006274509803	OK
X-X, +1.20D+0.50L+0.50S+1.60W	5247288888888	+Z	Bottom	0.4104	Min Temp %	0.41333333333339	.006274509803	OK
X-X, +1.20D+0.50L+0.50S+1.60W	5247288888888	-Z	Bottom	0.4104	Min Temp %	0.41333333333339	.006274509803	OK
X-X, +1.20D+0.50L+0.20S+E	1497955555555	+Z	Bottom	0.4104	Min Temp %	0.41333333333339	.006274509803	OK
X-X, +1.20D+0.50L+0.20S+E	1497955555555	-Z	Bottom	0.4104	Min Temp %	0.41333333333339	.006274509803	OK
X-X, +0.90D+E+1.60H	6748799999999	+Z	Bottom	0.4104	Min Temp %	0.41333333333339	.006274509803	OK
X-X, +0.90D+E+1.60H	6748799999999	-Z	Bottom	0.4104	Min Temp %	0.41333333333339	.006274509803	OK
Z-Z, +1.40D	0498133333333	-X	Bottom	0.4104	Min Temp %	0.41333333333339	.006274509803	OK
Z-Z, +1.40D	0498133333333	+X	Bottom	0.4104	Min Temp %	0.41333333333339	.006274509803	OK
Z-Z, +1.20D+0.50Lr+1.60L+1.60H	1497955555555	-X	Bottom	0.4104	Min Temp %	0.41333333333339	.006274509803	OK
Z-Z, +1.20D+0.50Lr+1.60L+1.60H	1497955555555	+X	Bottom	0.4104	Min Temp %	0.41333333333339	.006274509803	OK
Z-Z, +1.20D+1.60L+0.50S+1.60H	5247288888888	-X	Bottom	0.4104	Min Temp %	0.41333333333339	.006274509803	OK
Z-Z, +1.20D+1.60L+0.50S+1.60H	5247288888888	+X	Bottom	0.4104	Min Temp %	0.41333333333339	.006274509803	OK
Z-Z, +1.20D+1.60Lr+0.50L	6996977777777	-X	Bottom	0.4104	Min Temp %	0.41333333333339	.006274509803	OK
Z-Z, +1.20D+1.60Lr+0.50L	6996977777777	+X	Bottom	0.4104	Min Temp %	0.41333333333339	.006274509803	OK
Z-Z, +1.20D+1.60Lr+0.80W	6996977777777	-X	Bottom	0.4104	Min Temp %	0.41333333333339	.006274509803	OK
Z-Z, +1.20D+1.60Lr+0.80W	6996977777777	+X	Bottom	0.4104	Min Temp %	0.41333333333339	.006274509803	OK
Z-Z, +1.20D+0.50L+1.60S	8994844444444	-X	Bottom	0.4104	Min Temp %	0.41333333333339	.006274509803	OK
Z-Z, +1.20D+0.50L+1.60S	8994844444444	+X	Bottom	0.4104	Min Temp %	0.41333333333339	.006274509803	OK
Z-Z, +1.20D+1.60S+0.80W	8994844444444	-X	Bottom	0.4104	Min Temp %	0.41333333333339	.006274509803	OK
Z-Z, +1.20D+1.60S+0.80W	8994844444444	+X	Bottom	0.4104	Min Temp %	0.41333333333339	.006274509803	OK
Z-Z, +1.20D+0.50Lr+0.50L+1.60W	1497955555555	-X	Bottom	0.4104	Min Temp %	0.41333333333339	.006274509803	OK
Z-Z, +1.20D+0.50Lr+0.50L+1.60W	1497955555555	+X	Bottom	0.4104	Min Temp %	0.41333333333339	.006274509803	OK
Z-Z, +1.20D+0.50L+0.50S+1.60W	5247288888888	-X	Bottom	0.4104	Min Temp %	0.41333333333339	.006274509803	OK
Z-Z, +1.20D+0.50L+0.50S+1.60W	5247288888888	+X	Bottom	0.4104	Min Temp %	0.41333333333339	.006274509803	OK
Z-Z, +1.20D+0.50L+0.20S+E	8281538330945	-X	Top	0.4104	Min Temp %	0.41333333333339	.006274509803	OK
Z-Z, +1.20D+0.50L+0.20S+E	5103798553831	+X	Bottom	0.4104	Min Temp %	0.41333333333339	.006274509803	OK
Z-Z, +0.90D+E+1.60H	7117611375000	-X	Top	0.4104	Min Temp %	0.41333333333339	.006274509803	OK
Z-Z, +0.90D+E+1.60H	6255036256831	+X	Bottom	0.4104	Min Temp %	0.41333333333339	.006274509803	OK

One Way Shear

Load Combination...	Vu @ -X	Vu @ +X	Vu @ -Z	Vu @ +Z	Vu:Max	Phi Vn	Vu / Phi*Vn	Status
+1.40D	2 psi	2 psi	2 psi	2 psi	2 psi	82.158 psi	0.02434	OK
+1.20D+0.50Lr+1.60L+1.60H	2.19 psi	2.19 psi	2.19 psi	2.19 psi	2.19 psi	82.158 psi	0.02666	OK
+1.20D+1.60L+0.50S+1.60H	2.905 psi	2.905 psi	2.905 psi	2.905 psi	2.905 psi	82.158 psi	0.03536	OK
+1.20D+1.60Lr+0.50L	3.238 psi	3.238 psi	3.238 psi	3.238 psi	3.238 psi	82.158 psi	0.03941	OK
+1.20D+1.60Lr+0.80W	3.238 psi	3.238 psi	3.238 psi	3.238 psi	3.238 psi	82.158 psi	0.03941	OK
+1.20D+0.50L+1.60S	5.524 psi	5.524 psi	5.524 psi	5.524 psi	5.524 psi	82.158 psi	0.06723	OK
+1.20D+1.60S+0.80W	5.524 psi	5.524 psi	5.524 psi	5.524 psi	5.524 psi	82.158 psi	0.06723	OK
+1.20D+0.50Lr+0.50L+1.60W	2.19 psi	2.19 psi	2.19 psi	2.19 psi	2.19 psi	82.158 psi	0.02666	OK
+1.20D+0.50L+0.50S+1.60W	2.905 psi	2.905 psi	2.905 psi	2.905 psi	2.905 psi	82.158 psi	0.03536	OK
+1.20D+0.50L+0.20S+E	2.19 psi	2.19 psi	2.19 psi	2.19 psi	2.19 psi	82.158 psi	0.02666	OK
+0.90D+E+1.60H	1.285 psi	1.285 psi	1.286 psi	1.286 psi	1.286 psi	82.158 psi	0.01565	OK

Punching Shear

All units k

Load Combination...	Vu	Phi*Vn	Vu / Phi*Vn	Status
+1.40D	7.677 psi	164.317 psi	0.04672	OK
+1.20D+0.50Lr+1.60L+1.60H	8.408 psi	164.317 psi	0.05117	OK

Zarosinski Engineering and Design
1400 NW 155th Circle
Vancouver, WA 98685
360-513-2746
Email: dzaro@zaroeng.com
By Dean P. Zarosinski PE

Title : General Equipment Canopy
Engineer: Dean P. Zarosinski PE
Project Desc.: Roof over Cleanout area

Job # H0065-1

General Footing

File: C:\AA WORK\2011 PROJECTS\H0267-1 Gen Equip\Calculations\h0267-1 gen equip calcs.ec6
ENERCALC, INC. 1983-2011, Build:6.12.6.7, Ver:6.12.6.7

Lic. # : KW-06009383 **Licensee : Zarosinski Engineering and Design, Inc.**

Description : Footing at mid bay

Punching Shear

All units k

Load Combination...	Vu	Phi*Vn	Vu / Phi*Vn	Status
+1.20D+1.60L+0.50S+1.60H	11.149 psi	164.317 psi	0.06785	OK
+1.20D+1.60Lr+0.50L	12.429 psi	164.317 psi	0.07564	OK
+1.20D+1.60Lr+0.80W	12.429 psi	164.317 psi	0.07564	OK
+1.20D+0.50L+1.60S	21.202 psi	164.317 psi	0.129	OK
+1.20D+1.60S+0.80W	21.202 psi	164.317 psi	0.129	OK
+1.20D+0.50Lr+0.50L+1.60W	8.408 psi	164.317 psi	0.05117	OK
+1.20D+0.50L+0.50S+1.60W	11.149 psi	164.317 psi	0.06785	OK
+1.20D+0.50L+0.20S+E	8.559 psi	164.317 psi	0.05209	OK
+0.90D+E+1.60H	5.626 psi	164.317 psi	0.03424	OK

Zarosinski Engineering and Design
1400 NW 155th Circle
Vancouver, WA 98685
360-513-2746
Email: dzaro@zaroeng.com
By Dean P. Zarosinski PE

Title : General Equipment Canopy
Engineer: Dean P. Zarosinski PE
Project Desc.: Roof over Cleanout area

Job # H0065-1

General Footing

File: C:\AA WORK\2011 PROJECTS\H0267-1 Gen Equip\Calculations\h0267-1 gen equip calcs.ec6
ENERCALC, INC. 1983-2011, Build:6.12.6.7, Ver:6.12.6.7

Lic. # : KW-06009383 **Licensee : Zarosinski Engineering and Design, Inc.**

Description : Footing at outer bay

Code References

Calculations per ACI 318-05, IBC 2006, CBC 2007, ASCE 7-05
Load Combinations Used : 2006 IBC & ASCE 7-05

General Information

Material Properties

f'c : Concrete 28 day strength	=	3.0	ksi
fy : Rebar Yield	=	60.0	ksi
Ec : Concrete Elastic Modulus	=	3,122.0	ksi
Concrete Density	=	145.0	pcf
φ Values Flexure	=	0.90	
Shear	=	0.750	

Analysis Settings

Min Steel % Bending Reinf.	=	0.00140	
Min Allow % Temp Reinf.	=	0.00180	
Min. Overturning Safety Factor	=	1.0 : 1	
Min. Sliding Safety Factor	=	1.0 : 1	
Add Ftg Wt for Soil Pressure	:	Yes	
Use ftg wt for stability, moments & shears	:	Yes	
Include Pedestal Weight as DL	:	No	

Soil Design Values

Allowable Soil Bearing	=	2.0	ksf
Increase Bearing By Footing Weight	=	No	
Soil Passive Resistance (for Sliding)	=	250.0	pcf
Soil/Concrete Friction Coeff.	=	0.30	

Increases based on footing Depth
Footing base depth below soil surface = ft
Allowable pressure increase per foot of deptl = ksf
when footing base is below = ft

Increases based on footing plan dimension
Allowable pressure increase per foot of dept = ksf
when maximum length or width is greater = ft

Dimensions

Width parallel to X-X Axis	=	4.750	ft
Length parallel to Z-Z Axis	=	4.750	ft
Footing Thicknes	=	19.0	in

Pedestal dimensions...
px : parallel to X-X Axis = in
pz : parallel to Z-Z Axis = in
Height in
Rebar Centerline to Edge of Concrete..
at Bottom of footing = 3.0 in

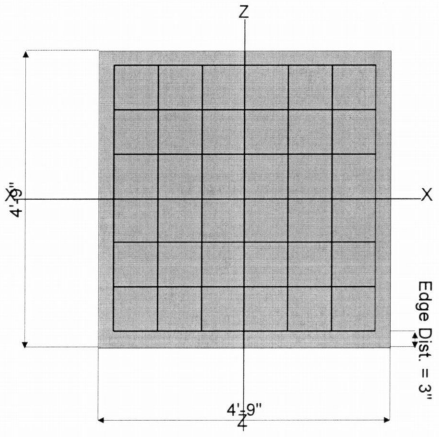

Reinforcing

Bars parallel to X-X Axis
Number of Bars = 7.0
Reinforcing Bar Size = # 5

Bars parallel to Z-Z Axis
Number of Bars = 7.0
Reinforcing Bar Size = # 5

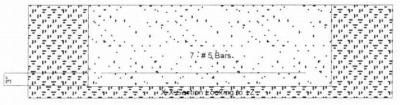

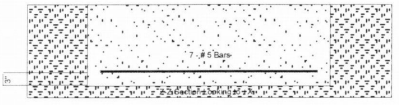

Bandwidth Distribution Check (ACI 15.4.4.2)

Direction Requiring Closer Separation	n/a
# Bars required within zone	n/a
# Bars required on each side of zone	n/a

Applied Loads

		D	Lr	L	S	W	E	H	
P : Column Load	=	3.0	2.0		5.0				k
OB : Overburden	=								ksf
M-xx	=					9.80	5.20		k-ft
M-zz	=					9.80	5.20		k-ft
V-x	=								k
V-z	=								k

Zarosinski Engineering and Design
1400 NW 155th Circle
Vancouver, WA 98685
360-513-2746
Email: dzaro@zaroeng.com
By Dean P. Zarosinski PE

Title : General Equipment Canopy
Engineer: Dean P. Zarosinski PE
Project Desc.: Roof over Cleanout area

Job # H0065-1

General Footing

File: C:\AA WORK\2011 PROJECTS\H0267-1 Gen Equip\Calculations\h0267-1 gen equip calcs.ec6
ENERCALC, INC. 1983-2011, Build:6.12.6.7, Ver:6.12.6.7

Lic. # : KW-06009383 **Licensee : Zarosinski Engineering and Design, Inc.**

Description : Footing at outer bay

DESIGN SUMMARY

Design OK

	Min. Ratio	Item	Applied	Capacity	Governing Load Combination
PASS	0.8850	Soil Bearing	1.770 ksf	2.0 ksf	+0.60D+W+H
PASS	1.189	Overturning - X-X	9.80 k-ft	11.656 k-ft	0.6D+W
PASS	1.189	Overturning - Z-Z	9.80 k-ft	11.656 k-ft	0.6D+W
PASS	n/a	Sliding - X-X	0.0 k	0.0 k	No Sliding
PASS	n/a	Sliding - Z-Z	0.0 k	0.0 k	No Sliding
PASS	n/a	Uplift	0.0 k	0.0 k	No Uplift
PASS	0.02767	Z Flexure (+X)	0.8847 k-ft	31.972 k-ft	+0.90D+E+1.60H
PASS	0.006563	Z Flexure (-X)	0.2098 k-ft	31.972 k-ft	+0.90D+E+1.60H
PASS	0.08489	X Flexure (+Z)	2.714 k-ft	31.972 k-ft	+0.90D+1.60W+1.60H
PASS	0.006563	X Flexure (-Z)	0.2098 k-ft	31.972 k-ft	+0.90D+E+1.60H
PASS	0.03303	1-way Shear (+X)	2.713 psi	82.158 psi	+1.20D+0.50L+1.60S
PASS	0.03303	1-way Shear (-X)	2.713 psi	82.158 psi	+1.20D+0.50L+1.60S
PASS	0.08487	1-way Shear (+Z)	6.973 psi	82.158 psi	+0.90D+1.60W+1.60H
PASS	0.03303	1-way Shear (-Z)	2.713 psi	82.158 psi	+1.20D+0.50L+1.60S
PASS	0.06354	2-way Punching	10.440 psi	164.317 psi	+1.20D+0.50L+1.60S

Detailed Results

Soil Bearing

Rotation Axis & Load Combination...	Gross Allowable	Xecc	Zecc	Actual Soil Bearing Stress +Z	+Z	-X	-X	Actual / Allowable Ratio
X-X, +D	2.0	n/a	0.0	0.3625	0.3625	n/a	n/a	0.181
X-X, +D+Lr+H	2.0	n/a	0.0	0.4512	0.4512	n/a	n/a	0.226
X-X, +D+S+H	2.0	n/a	0.0	0.5842	0.5842	n/a	n/a	0.292
X-X, +D+0.750Lr+0.750L+H	2.0	n/a	0.0	0.4290	0.4290	n/a	n/a	0.215
X-X, +D+0.750L+0.750S+H	2.0	n/a	0.0	0.5288	0.5288	n/a	n/a	0.264
X-X, +D+W+H	2.0	n/a	14.377	0.0	0.9667	n/a	n/a	0.483
X-X, +D+0.70E+H	2.0	n/a	5.340	0.1615	0.5636	n/a	n/a	0.282
X-X, +D+0.750Lr+0.750L+0.750W+H	2.0	n/a	9.112	0.02303	0.8350	n/a	n/a	0.418
X-X, +D+0.750L+0.750S+0.750W+H	2.0	n/a	7.393	0.1228	0.9348	n/a	n/a	0.467
X-X, +D+0.750Lr+0.750L+0.5250E+H	2.0	n/a	3.384	0.2782	0.5798	n/a	n/a	0.290
X-X, +D+0.750L+0.750S+0.5250E+H	2.0	n/a	2.746	0.3780	0.6796	n/a	n/a	0.340
X-X, +0.60D+W+H	2.0	n/a	23.961	0.0	1.770	n/a	n/a	0.885
X-X, +0.60D+0.70E+H	2.0	n/a	8.90	0.01646	0.4186	n/a	n/a	0.209
Z-Z, +D	2.0	0.0	n/a	n/a	n/a	0.3625	0.3625	0.181
Z-Z, +D+Lr+H	2.0	0.0	n/a	n/a	n/a	0.4512	0.4512	0.226
Z-Z, +D+S+H	2.0	0.0	n/a	n/a	n/a	0.5842	0.5842	0.292
Z-Z, +D+0.750Lr+0.750L+H	2.0	0.0	n/a	n/a	n/a	0.4290	0.4290	0.215
Z-Z, +D+0.750L+0.750S+H	2.0	0.0	n/a	n/a	n/a	0.5288	0.5288	0.264
Z-Z, +D+W+H	2.0	14.377	n/a	n/a	n/a	0.0	0.9667	0.483
Z-Z, +D+0.70E+H	2.0	5.340	n/a	n/a	n/a	0.1615	0.5636	0.282
Z-Z, +D+0.750Lr+0.750L+0.750W+H	2.0	9.112	n/a	n/a	n/a	0.02303	0.8350	0.418
Z-Z, +D+0.750L+0.750S+0.750W+H	2.0	7.393	n/a	n/a	n/a	0.1228	0.9348	0.467
Z-Z, +D+0.750Lr+0.750L+0.5250E+H	2.0	3.384	n/a	n/a	n/a	0.2782	0.5798	0.290
Z-Z, +D+0.750L+0.750S+0.5250E+H	2.0	2.746	n/a	n/a	n/a	0.3780	0.6796	0.340
Z-Z, +0.60D+W+H	2.0	23.961	n/a	n/a	n/a	0.0	1.770	0.885
Z-Z, +0.60D+0.70E+H	2.0	8.90	n/a	n/a	n/a	0.01646	0.4186	0.209

Overturning Stability

Rotation Axis & Load Combination...	Overturning Moment	Resisting Moment	Stability Ratio	Status
X-X, D	None	0.0 k-ft	Infinity	OK
X-X, D+Lr	None	0.0 k-ft	Infinity	OK
X-X, D+S	None	0.0 k-ft	Infinity	OK
X-X, 0.6D+S+W/2	4.90 k-ft	23.531 k-ft	4.802	OK
X-X, 0.6D+W+S/2	9.80 k-ft	17.594 k-ft	1.795	OK
X-X, 0.6D+W	9.80 k-ft	11.656 k-ft	1.189	OK
X-X, 0.6D+0.7E	3.640 k-ft	11.656 k-ft	3.202	OK
Z-Z, D	None	0.0 k-ft	Infinity	OK
Z-Z, D+Lr	None	0.0 k-ft	Infinity	OK
Z-Z, D+S	None	0.0 k-ft	Infinity	OK

Zarosinski Engineering and Design
1400 NW 155th Circle
Vancouver, WA 98685
360-513-2746
Email: dzaro@zaroeng.com
By Dean P. Zarosinski PE

Title : General Equipment Canopy
Engineer: Dean P. Zarosinski PE
Project Desc.: Roof over Cleanout area

Job # H0065-1

General Footing

File: C:\AA WORK\2011 PROJECTS\H0267-1 Gen Equip\Calculations\h0267-1 gen equip calcs.ec6
ENERCALC, INC. 1983-2011, Build:6.12.6.7, Ver:6.12.6.7

Lic. # : KW-06009383 **Licensee : Zarosinski Engineering and Design, Inc.**

Description : Footing at outer bay

Overturning Stability

Rotation Axis & Load Combination...	Overturning Moment	Resisting Moment	Stability Ratio	Status
Z-Z, 0.6D+S+W/2	4.90 k-ft	23.531 k-ft	4.802	OK
Z-Z, 0.6D+W+S/2	9.80 k-ft	17.594 k-ft	1.795	OK
Z-Z, 0.6D+W	9.80 k-ft	11.656 k-ft	1.189	OK
Z-Z, 0.6D+0.7E	3.640 k-ft	11.656 k-ft	3.202	OK

All units k

Sliding Stability

Force Application Axis Load Combination...	Sliding Force	Resisting Force	Sliding SafetyRatio	Status

Footing Has NO Sliding

Footing Flexure

Flexure Axis & Load Combination	Mu k-ft	Which Side ?	Tension @ Bot. or Top ?	As Req'd in^2	Gvrn. As in^2	Actual As in^2	Phi*Mn k-ft	Status
X-X, +1.40D	5249066666666	+Z	Bottom	0.4104	Min Temp %	0.456842105263	31.971875509206	OK
X-X, +1.40D	5249066666666	-Z	Bottom	0.4104	Min Temp %	0.456842105263	31.971875509206	OK
X-X, +1.20D+0.50Lr+1.60L+1.60H	5748977777777	+Z	Bottom	0.4104	Min Temp %	0.456842105263	31.971875509206	OK
X-X, +1.20D+0.50Lr+1.60L+1.60H	5748977777777	-Z	Bottom	0.4104	Min Temp %	0.456842105263	31.971875509206	OK
X-X, +1.20D+1.60L+0.50S+1.60H	7623644444444	+Z	Bottom	0.4104	Min Temp %	0.456842105263	31.971875509206	OK
X-X, +1.20D+1.60L+0.50S+1.60H	7623644444444	-Z	Bottom	0.4104	Min Temp %	0.456842105263	31.971875509206	OK
X-X, +1.20D+1.60Lr+0.50L	8498488888888	+Z	Bottom	0.4104	Min Temp %	0.456842105263	31.971875509206	OK
X-X, +1.20D+1.60Lr+0.50L	8498488888888	-Z	Bottom	0.4104	Min Temp %	0.456842105263	31.971875509206	OK
X-X, +1.20D+1.60Lr+0.80W	6749653333333	+Z	Bottom	0.4104	Min Temp %	0.456842105263	31.971875509206	OK
X-X, +1.20D+1.60Lr+0.80W	0247324444444	-Z	Bottom	0.4104	Min Temp %	0.456842105263	31.971875509206	OK
X-X, +1.20D+0.50L+1.60S	4497422222222	+Z	Bottom	0.4104	Min Temp %	0.456842105263	31.971875509206	OK
X-X, +1.20D+0.50L+1.60S	4497422222222	-Z	Bottom	0.4104	Min Temp %	0.456842105263	31.971875509206	OK
X-X, +1.20D+1.60S+0.80W	2748586666666	+Z	Bottom	0.4104	Min Temp %	0.456842105263	31.971875509206	OK
X-X, +1.20D+1.60S+0.80W	6246257777777	-Z	Bottom	0.4104	Min Temp %	0.456842105263	31.971875509206	OK
X-X, +1.20D+0.50Lr+0.50L+1.60W	5299523615892	+Z	Bottom	0.4104	Min Temp %	0.456842105263	31.971875509206	OK
X-X, +1.20D+0.50Lr+0.50L+1.60W	7705637970605	-Z	Top	0.4104	Min Temp %	0.456842105263	31.971875509206	OK
X-X, +1.20D+0.50L+0.50S+1.60W	5873356460405	+Z	Bottom	0.4104	Min Temp %	0.456842105263	31.971875509206	OK
X-X, +1.20D+0.50L+0.50S+1.60W	7132273169497	-Z	Top	0.4104	Min Temp %	0.456842105263	31.971875509206	OK
X-X, +1.20D+0.50L+0.20S+E	1221688888889	+Z	Bottom	0.4104	Min Temp %	0.456842105263	31.971875509206	OK
X-X, +1.20D+0.50L+0.20S+E	0276266666666	-Z	Bottom	0.4104	Min Temp %	0.456842105263	31.971875509206	OK
X-X, +0.90D+1.60W+1.60H	7141407804711	+Z	Bottom	0.4104	Min Temp %	0.456842105263	31.971875509206	OK
X-X, +0.90D+1.60W+1.60H	5826434708333	-Z	Top	0.4104	Min Temp %	0.456842105263	31.971875509206	OK
X-X, +0.90D+E+1.60H	8847111111110	+Z	Bottom	0.4104	Min Temp %	0.456842105263	31.971875509206	OK
X-X, +0.90D+E+1.60H	2098311111111	-Z	Top	0.4104	Min Temp %	0.456842105263	31.971875509206	OK
Z-Z, +1.40D	5249066666666	-X	Bottom	0.4104	Min Temp %	0.456842105263	31.971875509206	OK
Z-Z, +1.40D	5249066666666	+X	Bottom	0.4104	Min Temp %	0.456842105263	31.971875509206	OK
Z-Z, +1.20D+0.50Lr+1.60L+1.60H	5748977777777	-X	Bottom	0.4104	Min Temp %	0.456842105263	31.971875509206	OK
Z-Z, +1.20D+0.50Lr+1.60L+1.60H	5748977777777	+X	Bottom	0.4104	Min Temp %	0.456842105263	31.971875509206	OK
Z-Z, +1.20D+1.60L+0.50S+1.60H	7623644444444	-X	Bottom	0.4104	Min Temp %	0.456842105263	31.971875509206	OK
Z-Z, +1.20D+1.60L+0.50S+1.60H	7623644444444	+X	Bottom	0.4104	Min Temp %	0.456842105263	31.971875509206	OK
Z-Z, +1.20D+1.60Lr+0.50L	8498488888888	-X	Bottom	0.4104	Min Temp %	0.456842105263	31.971875509206	OK
Z-Z, +1.20D+1.60Lr+0.50L	8498488888888	+X	Bottom	0.4104	Min Temp %	0.456842105263	31.971875509206	OK
Z-Z, +1.20D+1.60Lr+0.80W	0247324444444	-X	Bottom	0.4104	Min Temp %	0.456842105263	31.971875509206	OK
Z-Z, +1.20D+1.60Lr+0.80W	6749653333333	+X	Bottom	0.4104	Min Temp %	0.456842105263	31.971875509206	OK
Z-Z, +1.20D+0.50L+1.60S	4497422222222	-X	Bottom	0.4104	Min Temp %	0.456842105263	31.971875509206	OK
Z-Z, +1.20D+0.50L+1.60S	4497422222222	+X	Bottom	0.4104	Min Temp %	0.456842105263	31.971875509206	OK
Z-Z, +1.20D+1.60S+0.80W	6246257777777	-X	Bottom	0.4104	Min Temp %	0.456842105263	31.971875509206	OK
Z-Z, +1.20D+1.60S+0.80W	2748586666666	+X	Bottom	0.4104	Min Temp %	0.456842105263	31.971875509206	OK
Z-Z, +1.20D+0.50Lr+0.50L+1.60W	7705637970605	-X	Top	0.4104	Min Temp %	0.456842105263	31.971875509206	OK
Z-Z, +1.20D+0.50Lr+0.50L+1.60W	5299523615892	+X	Bottom	0.4104	Min Temp %	0.456842105263	31.971875509206	OK
Z-Z, +1.20D+0.50L+0.50S+1.60W	7132273169497	-X	Top	0.4104	Min Temp %	0.456842105263	31.971875509206	OK
Z-Z, +1.20D+0.50L+0.50S+1.60W	5873356460405	+X	Bottom	0.4104	Min Temp %	0.456842105263	31.971875509206	OK
Z-Z, +1.20D+0.50L+0.20S+E	0276266666666	-X	Bottom	0.4104	Min Temp %	0.456842105263	31.971875509206	OK
Z-Z, +1.20D+0.50L+0.20S+E	1221688888889	+X	Bottom	0.4104	Min Temp %	0.456842105263	31.971875509206	OK
Z-Z, +0.90D+1.60W+1.60H	5826434708333	-X	Top	0.4104	Min Temp %	0.456842105263	31.971875509206	OK
Z-Z, +0.90D+1.60W+1.60H	7141407804711	+X	Bottom	0.4104	Min Temp %	0.456842105263	31.971875509206	OK
Z-Z, +0.90D+E+1.60H	2098311111111	-X	Top	0.4104	Min Temp %	0.456842105263	31.971875509206	OK
Z-Z, +0.90D+E+1.60H	8847111111110	+X	Bottom	0.4104	Min Temp %	0.456842105263	31.971875509206	OK

Zarosinski Engineering and Design
1400 NW 155th Circle
Vancouver, WA 98685
360-513-2746
Email: dzaro@zaroeng.com
By Dean P. Zarosinski PE

Title : General Equipment Canopy
Engineer: Dean P. Zarosinski PE
Project Desc.: Roof over Cleanout area

Job # H0065-1

General Footing

File: C:\AA WORK\2011 PROJECTS\H0267-1 Gen Equip\Calculations\h0267-1 gen equip calcs.ec6
ENERCALC, INC. 1983-2011, Build:6.12.6.7, Ver:6.12.6.7

Lic. # : KW-06009383 **Licensee : Zarosinski Engineering and Design, Inc.**

Description : Footing at outer bay

One Way Shear

Load Combination...	Vu @ -X	Vu @ +X	Vu @ -Z	Vu @ +Z	Vu:Max	Phi Vn	Vu / Phi*Vn	Status
+1.40D	0.9825 psi	0.9825 psi	0.9825 psi	0.9825 psi	0.9825 psi	82.158 psi	0.01196	OK
+1.20D+0.50Lr+1.60L+1.60H	1.076 psi	1.076 psi	1.076 psi	1.076 psi	1.076 psi	82.158 psi	0.0131	OK
+1.20D+1.60L+0.50S+1.60H	1.427 psi	1.427 psi	1.427 psi	1.427 psi	1.427 psi	82.158 psi	0.01737	OK
+1.20D+1.60Lr+0.50L	1.591 psi	1.591 psi	1.591 psi	1.591 psi	1.591 psi	82.158 psi	0.01936	OK
+1.20D+1.60Lr+0.80W	1.591 psi	1.591 psi	0.2317 psi	3.413 psi	3.413 psi	82.158 psi	0.04154	OK
+1.20D+0.50L+1.60S	2.713 psi	2.713 psi	2.713 psi	2.713 psi	2.713 psi	82.158 psi	0.03303	OK
+1.20D+1.60S+0.80W	2.713 psi	2.713 psi	0.8911 psi	4.536 psi	4.536 psi	82.158 psi	0.05521	OK
+1.20D+0.50Lr+0.50L+1.60W	1.076 psi	1.076 psi	1.454 psi	5.624 psi	5.624 psi	82.158 psi	0.06846	OK
+1.20D+0.50L+0.50S+1.60W	1.427 psi	1.427 psi	1.454 psi	5.557 psi	5.557 psi	82.158 psi	0.06763	OK
+1.20D+0.50L+0.20S+E	1.076 psi	1.076 psi	0.1327 psi	2.285 psi	2.285 psi	82.158 psi	0.02781	OK
+0.90D+1.60W+1.60H	0.6297 psi	0.6297 psi	1.091 psi	6.973 psi	6.973 psi	82.158 psi	0.08487	OK
+0.90D+E+1.60H	0.6316 psi	0.6316 psi	0.5771 psi	1.84 psi	1.84 psi	82.158 psi	0.0224	OK

All units k

Punching Shear

Load Combination...	Vu	Phi*Vn	Vu / Phi*Vn	Status
+1.40D	3.78 psi	164.317 psi	0.023	OK
+1.20D+0.50Lr+1.60L+1.60H	4.14 psi	164.317 psi	0.0252	OK
+1.20D+1.60L+0.50S+1.60H	5.49 psi	164.317 psi	0.03341	OK
+1.20D+1.60Lr+0.50L	6.12 psi	164.317 psi	0.03725	OK
+1.20D+1.60Lr+0.80W	6.12 psi	164.317 psi	0.03725	OK
+1.20D+0.50L+1.60S	10.44 psi	164.317 psi	0.06354	OK
+1.20D+1.60S+0.80W	10.44 psi	164.317 psi	0.06354	OK
+1.20D+0.50Lr+0.50L+1.60W	4.532 psi	164.317 psi	0.02758	OK
+1.20D+0.50L+0.50S+1.60W	5.67 psi	164.317 psi	0.03451	OK
+1.20D+0.50L+0.20S+E	4.14 psi	164.317 psi	0.0252	OK
+0.90D+1.60W+1.60H	2.986 psi	164.317 psi	0.01817	OK
+0.90D+E+1.60H	2.43 psi	164.317 psi	0.01479	OK

Zarosinski Engineering and Design
1400 NW 155th Circle
Vancouver, WA 98685
360-513-2746
Email: dzaro@zaroeng.com
By Dean P. Zarosinski PE

Title : General Equipment Canopy
Engineer: Dean P. Zarosinski PE
Project Desc.: Roof over Cleanout area

Job # H0065-1

Project Information

File: C:\AA WORK\2011 PROJECTS\H0267-1 Gen Equip\Calculations\h0267-1 gen equip calcs.ec6
ENERCALC, INC. 1983-2011, Build:6.12.3.14, Ver:6.12.3.14

Lic. # : KW-06009383 **Licensee : Zarosinski Engineering and Design, Inc.**

Project Title : General Equipment Canopy
Description : Roof over Cleanout area

I.D. : H0065-1
Address : 6767 NE Columbia Blvd., Portland, OR

Project Leader : Dean P. Zarosinski PE
Phone : 360-513-2746 Fax : eMail : dzaro@zaroeng.com

Project Notes

REGISTERED PROFESSIONAL ENGINEER
16478
OREGON
JAN 16, 1993
DEAN P. ZAROSINSKI
EXPIRES: 6-30-12

12/13/2011

13/33823.0

Zarosinski Engineering and Design
1400 NW 155th Circle
Vancouver, WA 98685
360-513-2746
Email: dzaro@zaroeng.com
By Dean P. Zarosinski PE

Title : General Equipment Canopy
Engineer: Dean P. Zarosinski PE
Project Desc.: Roof over Cleanout area

Job # H0065-1

ASCE Seismic Base Shear

File: C:\AA WORK\2011 PROJECTS\H0267-1 Gen Equip\Calculations\h0267-1 gen equip calcs.ec6
ENERCALC, INC. 1983-2011, Build:6.12.3.14, Ver:6.12.3.14

Lic. # : KW-06009383 **Licensee : Zarosinski Engineering and Design, Inc.**

Occupancy Category

Calculations per ASCE 7-10

Occupancy Category of Building or Other Structure : "I" : Buildings and other structures that represent a low hazard to human life in the event of failure. *ACSE 7-10, Page 3, Table 1-1*

Occupancy Importance Factor = 1 *ACSE 7-10, Page 116, Table 11.5-1*

Gridded Ss & S1values ASCE-7-10 Standard

ASCE 7-10 9.4.1.1

Max. Ground Motions, 5% Damping :

S_S = 0.9653 g, 0.2 sec response
S_1 = 0.4012 g, 1.0 sec response

Longitude = 0.000 deg West
Latitude = 0.000 deg North
Location : Portland, OR 97220

Site Class, Site Coeff. and Design Category

Site Classification "D" : Shear Wave Velocity 600 to 1,200 ft/sec = D *ASCE 7-10 Table 20.3-1*

Site Coefficients Fa & Fv *ASCE 7-10 Table 11.4-1 & 11.4-2*
(using straight-line interpolation from table values)
Fa = 1.11
Fv = 1.60

Maximum Considered Eartquake Acceleration
S_{MS} = Fa * Ss = 1.075 *ASCE 7-10 Table 11.4-1*
S_{M1} = Fv * S1 = 0.641 *ASCE 7-10 Table 11.4-2*

Design Spectral Acceleration
S_{DS} = S_{MS} * 2/3 = 0.717 *ASCE 7-10 Table 11.4-3*
S_{D1} = S_{M1} * 2/3 = 0.428 *ASCE 7-10 Table 11.4-4*

Seismic Design Category = D *ASCE 7-10 Table 11.6-1*

Resisting System

ASCE 7-10 Table 12.2-1

Basic Seismic Force Resisting System . . . **Moment Resisting Frame Systems**
Ordinary steel moment frames

Response Modification Coefficient " R " = 3.50
System Overstrength Factor " Wo " = 3.00
Deflection Amplification Factor " Cd " = 3.00

NOTE! See ASCE 7-05 for all applicable footnotes.

Building height Limits :

Category "A & B" Limit:	No Limit
Category "C" Limit:	No Limit
Category "D" Limit:	Not PermittedP-h
Category "E" Limit:	Not PermittedP-h
Category "F" Limit:	Not PermittedP-i

Redundancy Factor

ASCE 7-10 Section 12.3.4

Seismic Design Category of D, E, or F therefore Redundancy Factor " p " = 1.3

Lateral Force Procedure

ASCE 7-10 Section 12.8

Equivalent Lateral Force Procedure

The "Equivalent Lateral Force Procedure" is being used according to the provisions of ASCE 7-10 12.8

Determine Building Period

Use ASCE 12.8-7

Structure Type for Building Period Calculation : STEEL 100% Moment Resisting Frame

" Ct " value = 0.028 " hn " : Height from base to highest level = 20.0 ft
" x " value = 0.80
" Ta " Approximate fundemental period using Eq. 12.8-7 : Ta = Ct * (hn ^ x) = 0.308 sec
"TL" : Long-period transition period per ASCE 7-10 Maps 22-15 -> 22-20 16.000 sec

Building Period " Ta " Calculated from Approximate Method selected = 0.308 sec

ASCE 7-10 Section 12.8.1.1

S_{DS}: Short Period Design Spectral Response	=	0.717	From Eq. 12.8-2, Preliminary Cs	=	0.205
" R " : Response Modification Factor	=	3.50	From Eq. 12.8-3 & 12.8-4 , Cs need not exceed	=	0.397
" I " : Occupancy Importance Factor	=	1	From Eq. 12.8-5 & 12.8-6, Cs not be less than	=	0.032

User has selected ASCE 12.8.1.3 : Regular structure, Less than 5 Stories and with T <<= 0.5 sec, SO Ss <= 1.5 for Cs calculation

Cs : Seismic Response Coefficient = = 0.2048

Zarosinski Engineering and Design
1400 NW 155th Circle
Vancouver, WA 98685
360-513-2746
Email: dzaro@zaroeng.com
By Dean P. Zarosinski PE

Title : General Equipment Canopy
Engineer: Dean P. Zarosinski PE
Project Desc.: Roof over Cleanout area

Job # H0065-1

ASCE Seismic Base Shear

File: C:\AA WORK\2011 PROJECTS\H0267-1 Gen Equip\Calculations\h0267-1 gen equip calcs.ec6
ENERCALC, INC. 1983-2011, Build:6.12.3.14, Ver:6.12.3.14

Lic. # : KW-06009383 **Licensee : Zarosinski Engineering and Design, Inc.**

Seismic Base Shear

Calculated for Strength Design Load Combinations *ASCE 7-10 Section 12.8.3*

Cs = 0.2048 from 12.8.1.1

Vertical Distribution of Seismic Forces

" k " : hx exponent based on Ta = 1.00

W (see Sum Wi below) = 16.50 k

Seismic Base Shear V = Cs * W = 3.38 k

Table of building Weights by Floor Level...

Level #	Wi : Weight	Hi : Height	(Wi * Hi) ^k	Cvx	Fx=Cvx * V	Sum Story Shear	Sum Story Moment
1	16.50	20.00	330.00	1.00	3.38	3.38	0.00

Sum Wi = 16.50 k Sum Wi * Hi = 330.00 k-ft Total Base Shear = 3.38 k
Base Moment = 67.6 k-ft

Diaphragm Forces : Seismic Design Category "D", "E" & "F"

ASCE 7-10 9.5.2.6.4.4

Level #	Wi	Fi	Sum Fi	Sum Wi	Fpx
1	16.50	3.38	3.38	16.50	3.38

Wpx . . . . . Weight at level of diaphragm and other structure elements attached to it.
Fi . . . . . Design Lateral Force applied at the level.
Sum Fi . . . . . Sum of "Lat. Force" of current level plus all levels above
MIN Req'd Force @ Level . . . . . $0.20 * S_{DS} * I * Wpx$
MAX Req'd Force @ Level . . . . . $0.40 * S_{DS} * I * Wpx$
Fpx : Design Force @ Level . . . . . Wpx * SUM(x->n) Fi / SUM(x->n) wi, x = Current level, n = Top Level

Zarosinski Engineering and Design
1400 NW 155th Circle
Vancouver, WA 98685
360-513-2746
Email: dzaro@zaroeng.com
By Dean P. Zarosinski PE

Title : General Equipment Canopy
Engineer: Dean P. Zarosinski PE
Project Desc.: Roof over Cleanout area

Job # H0065-1

ASCE Seismic Base Shear

File: C:\AA WORK\2011 PROJECTS\H0267-1 Gen Equip\Calculations\h0267-1 gen equip calcs.ec6
ENERCALC, INC. 1983-2011, Build:6.12.3.14, Ver:6.12.3.14

Lic. # : KW-06009383 **Licensee : Zarosinski Engineering and Design, Inc.**

Moment Frame Supporting 20' wide for 40'

Occupancy Category

Calculations per ASCE 7-10

Occupancy Category of Building or Other Structure : "II" : All Buildings and other structures except those listed as Category I, III, and IV *ACSE 7-10, Page 3, Table 1-1*

Occupancy Importance Factor = 1 *ACSE 7-10, Page 116, Table 11.5-1*

Gridded Ss & S1values ASCE-7-10 Standard

ASCE 7-10 9.4.1.1

Max. Ground Motions, 5% Damping :

S_S = 0.9928 g, 0.2 sec response
S_1 = 0.4045 g, 1.0 sec response

Longitude = 0.000 deg West
Latitude = 0.000 deg North
Location : Portland, OR 97220

Site Class, Site Coeff. and Design Category

Site Classification "D" : Shear Wave Velocity 600 to 1,200 ft/sec = D *ASCE 7-10 Table 20.3-1*

Site Coefficients Fa & Fv *ASCE 7-10 Table 11.4-1 & 11.4-2*
(using straight-line interpolation from table values)

Fa = 1.10
Fv = 1.60

Maximum Considered Eartquake Acceleration

S_{MS} = Fa * Ss = 1.095 *ASCE 7-10 Table 11.4-1*
S_{M1} = Fv * S1 = 0.645 *ASCE 7-10 Table 11.4-2*

Design Spectral Acceleration

$S_{DS} = S_{MS} * 2/3$ = 0.730 *ASCE 7-10 Table 11.4-3*
$S_{D1} = S_{M1} * 2/3$ = 0.430 *ASCE 7-10 Table 11.4-4*

Seismic Design Category = D *ASCE 7-10 Table 11.6-1*

Resisting System

ASCE 7-10 Table 12.2-1

Basic Seismic Force Resisting System . . . **Moment Resisting Frame Systems**
Ordinary steel moment frames

Response Modification Coefficient " R " = 3.50
System Overstrength Factor " Wo " = 3.00
Deflection Amplification Factor " Cd " = 3.00

NOTE! See ASCE 7-05 for all applicable footnotes.

Building height Limits :

Category "A & B" Limit:	No Limit
Category "C" Limit:	No Limit
Category "D" Limit:	Not PermittedP-h
Category "E" Limit:	Not PermittedP-h
Category "F" Limit:	Not PermittedP-i

Redundancy Factor

ASCE 7-10 Section 12.3.4

Seismic Design Category of D, E, or F, Redundancy Factor " p " Set by User to = 1.0

Lateral Force Procedure

ASCE 7-10 Section 12.8

Equivalent Lateral Force Procedure

The "Equivalent Lateral Force Procedure" is being used according to the provisions of ASCE 7-10 12.8

Determine Building Period

Use ASCE 12.8-7

Structure Type for Building Period Calculation : STEEL 100% Moment Resisting Frame

" Ct " value = 0.028
" x " value = 0.80
" hn " : Height from base to highest level = 20.0 ft
" Ta " Approximate fundemental period using Eq. 12.8-7 : Ta = Ct * (hn ^ x) = 0.308 sec
"TL" : Long-period transition period per ASCE 7-10 Maps 22-15 -> 22-20 16.000 sec

Building Period " Ta " Calculated from Approximate Method selected = 0.308 sec

ASCE 7-10 Section 12.8.1.1

S_{DS}: Short Period Design Spectral Response	=	0.730	From Eq. 12.8-2, Preliminary Cs	=	0.209
" R " : Response Modification Factor	=	3.50	From Eq. 12.8-3 & 12.8-4 , Cs need not exceed	=	0.400
" I " : Occupancy Importance Factor	=	1	From Eq. 12.8-5 & 12.8-6, Cs not be less than	=	0.032

User has selected ASCE 12.8.1.3 : Regular structure,
Less than 5 Stories and with T <<= 0.5 sec, SO Ss <= 1.5 for Cs calculation

Cs : Seismic Response Coefficient = = 0.2086

Zarosinski Engineering and Design
1400 NW 155th Circle
Vancouver, WA 98685
360-513-2746
Email: dzaro@zaroeng.com
By Dean P. Zarosinski PE

Title : General Equipment Canopy
Engineer: Dean P. Zarosinski PE
Project Desc.: Roof over Cleanout area

Job # H0065-1

ASCE Seismic Base Shear

File: C:\AA WORK\2011 PROJECTS\H0267-1 Gen Equip\Calculations\h0267-1 gen equip calcs.ec6
ENERCALC, INC. 1983-2011, Build:6.12.3.14, Ver:6.12.3.14

Lic. # : KW-06009383 **Licensee : Zarosinski Engineering and Design, Inc.**

Seismic Base Shear

Calculated for Strength Design Load Combinations *ASCE 7-10 Section 12.8.3*

Cs = 0.2086 from 12.8.1.1

W (see Sum Wi below) = 12.00 k

Vertical Distribution of Seismic Forces

Seismic Base Shear V = Cs * W = 2.50 k

" k " : hx exponent based on Ta = 1.00

Table of building Weights by Floor Level...

Level #	Wi : Weight	Hi : Height	(Wi * Hi) ^k	Cvx	Fx=Cvx * V	Sum Story Shear	Sum Story Moment
1	12.00	20.00	240.00	1.00	2.50	2.50	0.00

Sum Wi = 12.00 k Sum Wi * Hi = 240.00 k-ft Total Base Shear = 2.50 k

Base Moment = 50.1 k-ft

Zarosinski Engineering and Design
1400 NW 155th Circle
Vancouver, WA 98685
360-513-2746
Email: dzaro@zaroeng.com
By Dean P. Zarosinski PE

Title : General Equipment Canopy
Engineer: Dean P. Zarosinski PE
Project Desc.: Roof over Cleanout area

Job # H0065-1

ASCE Seismic Base Shear

File: C:\AA WORK\2011 PROJECTS\H0267-1 Gen Equip\Calculations\h0267-1 gen equip calcs.ec6
ENERCALC, INC. 1983-2011, Build:6.12.3.14, Ver:6.12.3.14

Lic. # : KW-06009383 **Licensee : Zarosinski Engineering and Design, Inc.**

Diaphragm Forces : Seismic Design Category "D", "E" & "F"

ASCE 7-10 9.5.2.6.4.4

Level #	Wi	Fi	Sum Fi	Sum Wi	Fpx
1	12.00	2.50	2.50	12.00	2.50

Wpx . . . . . Weight at level of diaphragm and other structure elements attached to it.
Fi . . . . . Design Lateral Force applied at the level.
Sum Fi . . . . . Sum of "Lat. Force" of current level plus all levels above
MIN Req'd Force @ Level . . . . . $0.20 * S_{DS} * I * Wpx$
MAX Req'd Force @ Level . . . . . $0.40 * S_{DS} * I * Wpx$
Fpx : Design Force @ Level . . . . . Wpx * SUM(x->n) Fi / SUM(x->n) wi, x = Current level, n = Top Level

Zarosinski Engineering and Design
1400 NW 155th Circle
Vancouver, WA 98685
360-513-2746
Email: dzaro@zaroeng.com
By Dean P. Zarosinski PE

Title : General Equipment Canopy
Engineer: Dean P. Zarosinski PE
Project Desc.: Roof over Cleanout area

Job # H0065-1

Steel Column

File: C:\AA WORK\2011 PROJECTS\H0267-1 Gen Equip\Calculations\h0267-1 gen equip calcs.ec6
ENERCALC, INC. 1983-2011, Build:6.12.3.14, Ver:6.12.3.14

Lic. # : KW-06009383 **Licensee : Zarosinski Engineering and Design, Inc.**

Description : Column analysis for perimiter channel

General Information

Calculations per AISC 360-05, ASCE 7-05

Steel Section Name : **C8x11.5**
Analysis Method : Allowable Stress
Steel Stress Grade
Fy : Steel Yield 36.0 ksi
E : Elastic Bending Modulus 29,000.0 ksi
Load Combination : 2006 IBC & ASCE 7-05

Overall Column Height 18.50 ft
Top & Bottom Fixity Top & Bottom Pinned

Brace condition for deflection (buckling) along columns :
X-X (width) axis : Unbraced Length for X-X Axis buckling = 18.8 ft, K = 1.0
Y-Y (depth) axis :Unbraced Length for Y-Y Axis buckling = 18.8 ft, K = 1.0

Applied Loads

Service loads entered. Load Factors will be applied for calculations.

AXIAL LOADS . . .
Axial Load at 18.50 ft, W = 2.0, E = 2.0 k

DESIGN SUMMARY

Bending & Shear Check Results

PASS Max. Axial+Bending Stress Ratio = **0.5006** : 1
Load Combination +D+W+H
Location of max.above base 0.0 ft
At maximum location values are . . .
Pa : Axial 2.0 k
Pn / Omega : Allowable 3.995 k
Ma-x : Applied 0.0 k-ft
Mn-x / Omega : Allowable 5.240 k-ft
Ma-y : Applied 0.0 k-ft
Mn-y / Omega : Allowable 2.228 k-ft

PASS Maximum Shear Stress Ratio = **0.0** : 1
Load Combination 0.0
Location of max.above base 0.0 ft
At maximum location values are . . .
Va : Applied 0.0 k
Vn / Omega : Allowable 0.0 k

Maximum SERVICE Load Reactions . .
Top along X-X 0.0 k
Bottom along X-X 0.0 k
Top along Y-Y 0.0 k
Bottom along Y-Y 0.0 k

Maximum SERVICE Load Deflections . . .
Along Y-Y 0.0 in at 0.0 ft above base
for load combination :
Along X-X 0.0 in at 0.0 ft above base
for load combination :

Load Combination Results

Load Combination	Maximum Axial + Bending Stress Ratios			Maximum Shear Ratios		
	Stress Ratio	Status	Location	Stress Ratio	Status	Location
+D+W+H	0.501	PASS	0.00 ft	0.000	PASS	0.00 ft
+D-1.0W+H	0.028	PASS	0.00 ft	0.000	PASS	0.00 ft
+D+0.70E+H	0.350	PASS	0.00 ft	0.000	PASS	0.00 ft
+D-0.70E+H	0.019	PASS	0.00 ft	0.000	PASS	0.00 ft
+D+0.750Lr+0.750L+0.750W+H	0.375	PASS	0.00 ft	0.000	PASS	0.00 ft
+D+0.750Lr+0.750L-0.750W+H	0.021	PASS	0.00 ft	0.000	PASS	0.00 ft
+D+0.750L+0.750S+0.750W+H	0.375	PASS	0.00 ft	0.000	PASS	0.00 ft
+D+0.750L+0.750S-0.750W+H	0.021	PASS	0.00 ft	0.000	PASS	0.00 ft
+D+0.750Lr+0.750L+0.5250E+H	0.263	PASS	0.00 ft	0.000	PASS	0.00 ft
+D+0.750Lr+0.750L-0.5250E+H	0.014	PASS	0.00 ft	0.000	PASS	0.00 ft
+D+0.750L+0.750S+0.5250E+H	0.263	PASS	0.00 ft	0.000	PASS	0.00 ft
+D+0.750L+0.750S-0.5250E+H	0.014	PASS	0.00 ft	0.000	PASS	0.00 ft
+0.60D+W+H	0.501	PASS	0.00 ft	0.000	PASS	0.00 ft
+0.60D-1.0W+H	0.028	PASS	0.00 ft	0.000	PASS	0.00 ft
+0.60D+0.70E+H	0.350	PASS	0.00 ft	0.000	PASS	0.00 ft
+0.60D-0.70E+H	0.019	PASS	0.00 ft	0.000	PASS	0.00 ft

Maximum Reactions - Unfactored

Note: Only non-zero reactions are listed.

Load Combination	X-X Axis Reaction		Y-Y Axis Reaction		Axial Reaction
	@ Base	@ Top	@ Base	@ Top	@ Base
W Only		k		k	2.000 k
-W Only		k		k	2.000 k
E Only		k		k	2.000 k
-E Only		k		k	2.000 k

Zarosinski Engineering and Design
1400 NW 155th Circle
Vancouver, WA 98685
360-513-2746
Email: dzaro@zaroeng.com
By Dean P. Zarosinski PE

Title : General Equipment Canopy
Engineer: Dean P. Zarosinski PE
Project Desc.: Roof over Cleanout area

Job # H0065-1

Steel Column

File: C:\AA WORK\2011 PROJECTS\H0267-1 Gen Equip\Calculations\h0267-1 gen equip calcs.ec6
ENERCALC, INC. 1983-2011, Build:6.12.3.14, Ver:6.12.3.14

Lic. # : KW-06009383 **Licensee : Zarosinski Engineering and Design, Inc.**

Description : Column analysis for perimiter channel

Maximum Deflections for Load Combinations - Unfactored Loads

Load Combination	Max. X-X Deflection	Distance	Max. Y-Y Deflection	Distance
W Only	0.0000 in	0.000 ft	0.000 in	0.000 ft
-W Only	0.0000 in	0.000 ft	0.000 in	0.000 ft
E Only	0.0000 in	0.000 ft	0.000 in	0.000 ft
-E Only	0.0000 in	0.000 ft	0.000 in	0.000 ft

Steel Section Properties : C8x11.5

Depth	=	8.000 in	I xx	=	32.50 in^4	J	=	0.130 in^4
Web Thick	=	0.220 in	S xx	=	8.14 in^3			
Flange Width	=	2.260 in	R xx	=	3.110 in			
Flange Thick	=	0.390 in						
Area	=	3.370 in^2	I yy	=	1.310 in^4			
Weight	=	11.500 plf	S yy	=	0.775 in^3			
			R yy	=	0.623 in			

Ycg = 0.000 in

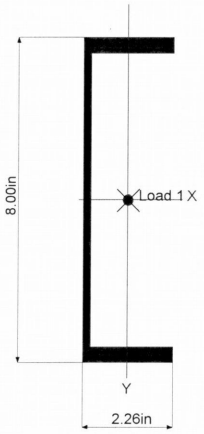

Loads are total entered value. Arrows do not reflect absolute direction.

Zarosinski Engineering and Design
1400 NW 155th Circle
Vancouver, WA 98685
360-513-2746
Email: dzaro@zaroeng.com
By Dean P. Zarosinski PE

Title : General Equipment Canopy
Engineer: Dean P. Zarosinski PE
Project Desc.: Roof over Cleanout area

Job # H0065-1

2-D Frame Analysis

File: C:\AA WORK\2011 PROJECTS\H0267-1 Gen Equip\Calculations\h0267-1 gen equip calcs.ec6
ENERCALC, INC. 1983-2011, Build:6.12.3.14, Ver:6.12.3.14

Lic. # : KW-06009383 **Licensee : Zarosinski Engineering and Design, Inc.**

Description : Middle Fram General Equipment

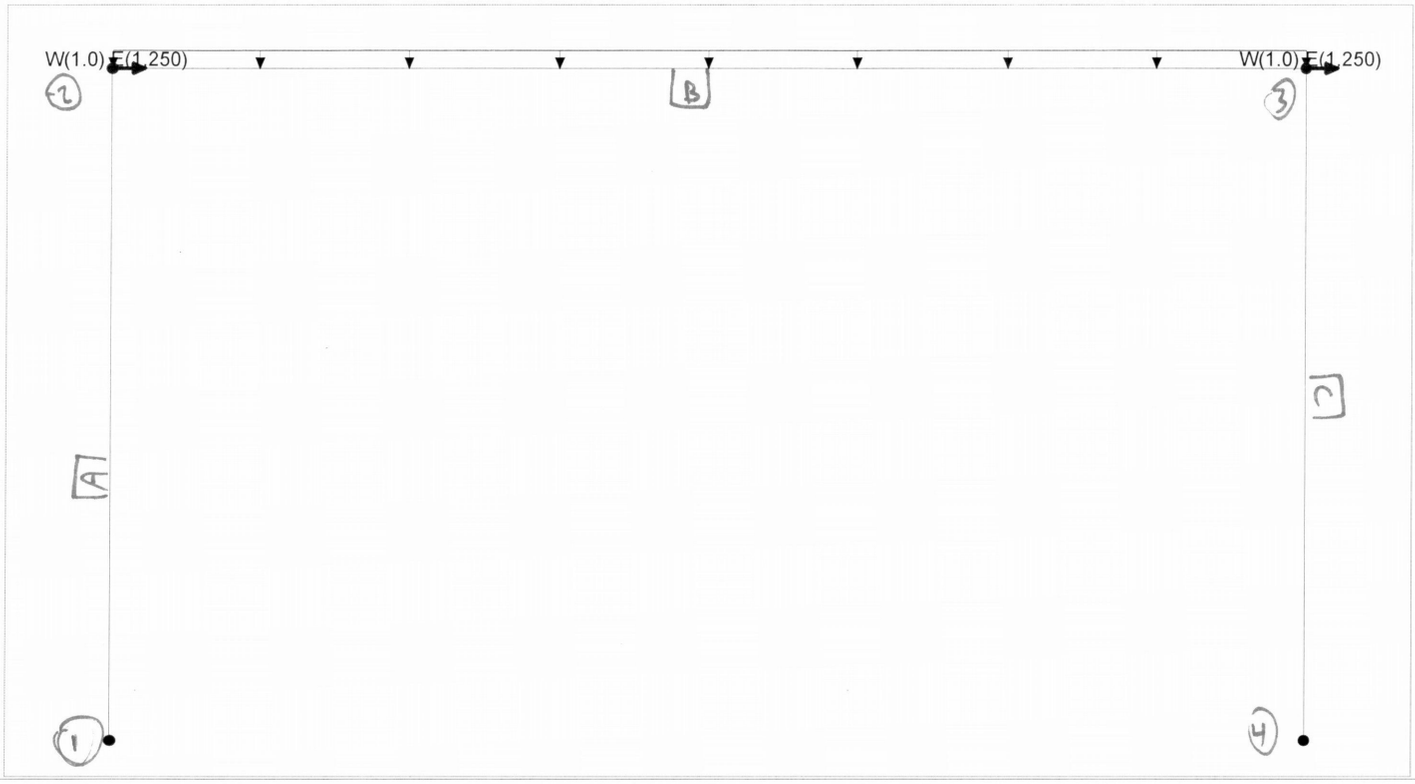

Joints...

Joint Label	Joint Coordinates X ft	Y ft	X Restraint	Y Restraint	Z Restraint	Joint Temp deg F
1	0.0	0.0	Fixed	Fixed	Fixed	0
2	0.0	20.0				0
3	36.0	20.0				0
4	36.0	0.0	Fixed	Fixed	Fixed	0

Members...

Member Label	Property Label	Endpoint Joints I Joint	J Joint	Member Length ft	I End Releases x	y	z	J End Releases x	y	z
A	Column	1	2	20.000	Fixed	Fixed	Pinne	Fixed	Fixed	Fixed
B	Beam	2	3	36.000	Fixed	Fixed	Fixed	Fixed	Fixed	Fixed
C	Column	3	4	20.000	Fixed	Fixed	Fixed	Fixed	Fixed	Free

Member Stress Check Data...

Member Label	Unbraced Lengths Lu : z ft	Lu : y	Slenderness Factors K : z	K : y	AISC Bending & Stability Factors Cm	Cb
A	18.000	18.000	1.00	1.00	Internal	Internal
B	36.000	36.000	1.00	1.00	Internal	Internal
C	18.000	18.000	1.00	1.00	Internal	Internal

Materials...

Member Label	Youngs ksi	Density kcf	Thermal in/degr	Yield ksi
Default	1.00	0.000	0.000000	1.00
Steel	29.000.00	0.490	0.000650	50.00

Zarosinski Engineering and Design
1400 NW 155th Circle
Vancouver, WA 98685
360-513-2746
Email: dzaro@zaroeng.com
By Dean P. Zarosinski PE

Title : General Equipment Canopy
Engineer: Dean P. Zarosinski PE
Project Desc.: Roof over Cleanout area

Job # H0065-1

2-D Frame Analysis

File: C:\AA WORK\2011 PROJECTS\H0267-1 Gen Equip\Calculations\h0267-1 gen equip calcs.ec6
ENERCALC, INC. 1983-2011, Build:6.12.3.14, Ver:6.12.3.14

Lic. # : KW-06009383 **Licensee : Zarosinski Engineering and Design, Inc.**

Description : Middle Fram General Equipment

Member Sections...

Prop Label	Group Tag	Material	Area	Depth	Width	Ixx	Iyy
Default	Group	Default	1.0 in^2	0.0 in	0.0 in	1.0 in^4	1.0 in^4
W12x22	Column	Steel	6.480 in^2	12.30 in	4.030 in	156.0 in^4	4.660 in^4
W18x40	Beam	Steel	11.80 in^2	17.90 in	6.020 in	612.0 in^4	19.10 in^4

Member Point Loads....

Member Label	Load Direction	Distance from "I" Joint	Load Magnitude Dead	Roof Live	Live	Snow	Seismic	Wind	Earth
A	Global X	20 ft					1.250	1.0	k
C	Global X	0 ft					1.250	1.0	k

Member Distributed Loads....

Member Label	Load Direction	Load Extents Start End ft		Load Magnitude Dead	Roof Live	Live	Snow	Seismic	Wind	Earth
B	Global Y	0.0	Start Mag :	0.30	0.20		0.50			k/ft
		36.0	End Mag :	0.30	0.20		0.50			k/ft

Load Combinations...

Load Combination Description	Group Multiplier	Self Weight Factors X	Y	Load Combination Factors Dead	Roof Live	Live	Snow	Seismic	Wind	Earth
+D	1.0		-1.0	1.0						
+D+L+H	1.0		-1.0	1.0		1.0				1.0
+D+Lr+H	1.0		-1.0	1.0	1.0					1.0
+D+S+H	1.0		-1.0	1.0			1.0			1.0
+D+0.750Lr+0.750L+H	1.0		-1.0	1.0	0.750	0.750				1.0
+D+0.750L+0.750S+H	1.0		-1.0	1.0		0.750	0.750			1.0
+D+W+H	1.0		-1.0	1.0					1.0	1.0
+D+0.70E+H	1.0		-1.0	1.0				0.70		1.0
+D+0.750Lr+0.750L+0.750W+H	1.0		-1.0	1.0	0.750	0.750			0.750	1.0
+D+0.750L+0.750S+0.750W+H	1.0		-1.0	1.0		0.750	0.750		0.750	1.0
+D+0.750Lr+0.750L+0.5250E+H	1.0		-1.0	1.0	0.750	0.750		0.5250		1.0
+D+0.750L+0.750S+0.5250E+H	1.0		-1.0	1.0		0.750	0.750	0.5250		1.0
+0.60D+W+H	1.0		-1.0	0.60					1.0	1.0
+0.60D+0.70E+H	1.0		-1.0	0.60				0.70		1.0
+1.40D	1.0		-1.0	1.40						
+1.20D+0.50Lr+1.60L+1.60H	1.0		-1.0	1.20	0.50	1.60				1.60
+1.20D+1.60L+0.50S+1.60H	1.0		-1.0	1.20		1.60	0.50			1.60
+1.20D+1.60Lr+0.50L	1.0		-1.0	1.20	1.60	0.50				
+1.20D+1.60Lr+0.80W	1.0		-1.0	1.20	1.60				0.80	
+1.20D+0.50L+1.60S	1.0		-1.0	1.20		0.50	1.60			
+1.20D+1.60S+0.80W	1.0		-1.0	1.20			1.60		0.80	
+1.20D+0.50Lr+0.50L+1.60W	1.0		-1.0	1.20	0.50	0.50			1.60	
+1.20D+0.50L+0.50S+1.60W	1.0		-1.0	1.20		0.50	0.50		1.60	
+1.20D+0.50L+0.20S+E	1.0		-1.0	1.20		0.50	0.20	1.0		
+0.90D+1.60W+1.60H	1.0		-1.0	0.90					1.60	1.60
+0.90D+E+1.60H	1.0		-1.0	0.90				1.0		1.60

Zarosinski Engineering and Design
1400 NW 155th Circle
Vancouver, WA 98685
360-513-2746
Email: dzaro@zaroeng.com
By Dean P. Zarosinski PE

Title : General Equipment Canopy
Engineer: Dean P. Zarosinski PE
Project Desc.: Roof over Cleanout area

Job # H0065-1

Steel Beam

File: C:\AA WORK\2011 PROJECTS\H0267-1 Gen Equip\Calculations\h0267-1 gen equip calcs.ec6
ENERCALC, INC. 1983-2011, Build:6.12.3.14, Ver:6.12.3.14

Lic. # : KW-06009383 **Licensee : Zarosinski Engineering and Design, Inc.**

Description : Frame Beam

Material Properties

Calculations per AISC 360-05, ASCE 7-05

Analysis Method : Allowable Stress Design
Beam Bracing : Beam is Fully Braced against lateral-torsional buckling
Bending Axis : Major Axis Bending
Load Combination 2006 IBC & ASCE 7-05

Fy : Steel Yield : 36.0 ksi
E: Modulus : 29,000.0 ksi

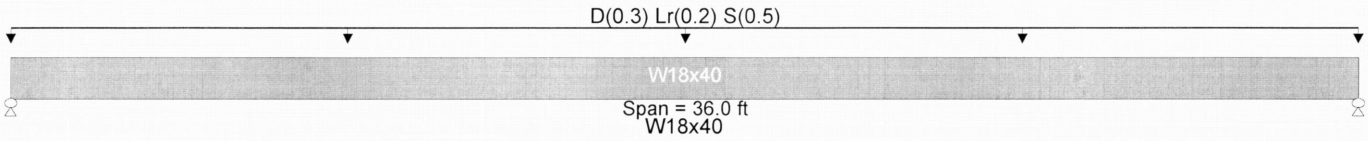

Applied Loads

Service loads entered. Load Factors will be applied for calculations.

Beam self weight calculated and added to loads
Uniform Load : D = 0.0150, Lr = 0.010, S = 0.0250 ksf, Tributary Width = 20.0 ft, (Roof Load)

DESIGN SUMMARY

Design OK

Maximum Bending Stress Ratio =	**0.966** : 1	Maximum Shear Stress Ratio =	**0.186** : 1
Section used for this span	**W18x40**	Section used for this span	**W18x40**
Mu : Applied	136.107 k-ft	Vu : Applied	15.123 k
Mn / Omega : Allowable	140.838 k-ft	Vn/Omega : Allowable	81.194 k
Load Combination	+D+S+H	Load Combination	+D+S+H
Location of maximum on span	18.000ft	Location of maximum on span	36.000 ft
Span # where maximum occurs	Span # 1	Span # where maximum occurs	Span # 1

Maximum Deflection

Max Downward L+Lr+S Deflection	1.073 in	Ratio =	402
Max Upward L+Lr+S Deflection	0.000 in	Ratio =	0 <360
Max Downward Total Deflection	2.233 in	Ratio =	193
Max Upward Total Deflection	0.000 in	Ratio =	0 <180

Maximum Forces & Stresses for Load Combinations

Load Combination		Max Stress Ratios		Summary of Moment Values							Summary of Shear Values		
Segment Length	Span #	M	V	Mmax +	Mmax -	Ma - Max	Mnx	Mnx/Omega	Cb	Rm	Va Max	Vnx	Vnx/Omega
+D													
Dsgn. L = 36.00 ft	1	0.391	0.075	55.11		55.11	235.20	140.84	1.00	1.00	6.12	121.79	81.19
+D+Lr+H													
Dsgn. L = 36.00 ft	1	0.621	0.120	87.51		87.51	235.20	140.84	1.00	1.00	9.72	121.79	81.19
+D+S+H													
Dsgn. L = 36.00 ft	1	0.966	0.186	136.11		136.11	235.20	140.84	1.00	1.00	15.12	121.79	81.19
+D+0.750Lr+0.750L+H													
Dsgn. L = 36.00 ft	1	0.564	0.109	79.41		79.41	235.20	140.84	1.00	1.00	8.82	121.79	81.19
+D+0.750L+0.750S+H													
Dsgn. L = 36.00 ft	1	0.823	0.159	115.86		115.86	235.20	140.84	1.00	1.00	12.87	121.79	81.19
+D+0.750Lr+0.750L+0.750W+H													
Dsgn. L = 36.00 ft	1	0.564	0.109	79.41		79.41	235.20	140.84	1.00	1.00	8.82	121.79	81.19
+D+0.750L+0.750S+0.750W+H													
Dsgn. L = 36.00 ft	1	0.823	0.159	115.86		115.86	235.20	140.84	1.00	1.00	12.87	121.79	81.19
+D+0.750Lr+0.750L+0.5250E+H													
Dsgn. L = 36.00 ft	1	0.564	0.109	79.41		79.41	235.20	140.84	1.00	1.00	8.82	121.79	81.19
+D+0.750L+0.750S+0.5250E+H													
Dsgn. L = 36.00 ft	1	0.823	0.159	115.86		115.86	235.20	140.84	1.00	1.00	12.87	121.79	81.19

Overall Maximum Deflections - Unfactored Loads

Load Combination	Span	Max. "-" Defl	Location in Span	Load Combination	Max. "+" Defl	Location in Span
	1	0.0000	0.000		0.0000	0.000

Vertical Reactions - Unfactored

Support notation : Far left is #1 Values in KIPS

Load Combination	Support 1	Support 2
Overall MAXimum	18.723	18.723
D Only	6.123	6.123
Lr Only	3.600	3.600

Zarosinski Engineering and Design
1400 NW 155th Circle
Vancouver, WA 98685
360-513-2746
Email: dzaro@zaroeng.com
By Dean P. Zarosinski PE

Title : General Equipment Canopy
Engineer: Dean P. Zarosinski PE
Project Desc.: Roof over Cleanout area

Job # H0065-1

Steel Beam

File: C:\AA WORK\2011 PROJECTS\H0267-1 Gen Equip\Calculations\h0267-1 gen equip calcs.ec6
ENERCALC, INC. 1983-2011, Build:6.12.3.14, Ver:6.12.3.14

Lic. # : KW-06009383 **Licensee : Zarosinski Engineering and Design, Inc.**

Description : Frame Beam

Vertical Reactions - Unfactored

Support notation : Far left is #1 Values in KIPS

Load Combination	Support 1	Support 2
S Only	9.000	9.000
Lr+S	12.600	12.600
D+Lr	9.723	9.723
D+S	15.123	15.123
D+Lr+S	18.723	18.723

Zarosinski Engineering and Design
1400 NW 155th Circle
Vancouver, WA 98685
360-513-2746
Email: dzaro@zaroeng.com
By Dean P. Zarosinski PE

Title : General Equipment Canopy
Engineer: Dean P. Zarosinski PE
Project Desc.: Roof over Cleanout area

Job # H0065-1

Steel Beam

File: C:\AA WORK\2011 PROJECTS\H0267-1 Gen Equip\Calculations\h0267-1 gen equip calcs.ec6
ENERCALC, INC. 1983-2011, Build:6.12.3.14, Ver:6.12.3.14

Lic. # : KW-06009383 **Licensee : Zarosinski Engineering and Design, Inc.**

Description : Frame Beam

Material Properties

Calculations per AISC 360-05, ASCE 7-05

Analysis Method : Allowable Stress Design
Beam Bracing : Beam is Fully Braced against lateral-torsional buckling
Bending Axis : Major Axis Bending
Load Combination 2006 IBC & ASCE 7-05

Fy : Steel Yield : 36.0 ksi
E: Modulus : 29,000.0 ksi

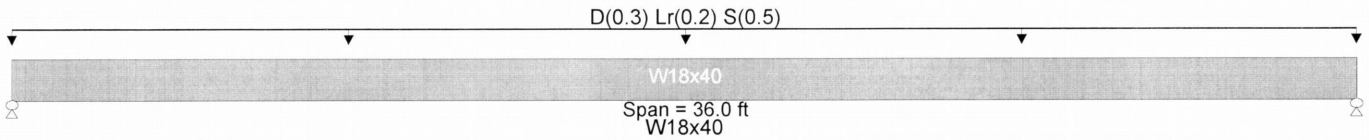

Applied Loads

Service loads entered. Load Factors will be applied for calculations.

Beam self weight calculated and added to loads
Uniform Load : D = 0.0150, Lr = 0.010, S = 0.0250 ksf, Tributary Width = 20.0 ft, (Roof Load)

DESIGN SUMMARY

Design OK

Maximum Bending Stress Ratio =	**0.966** : 1	Maximum Shear Stress Ratio =	**0.186** : 1
Section used for this span	**W18x40**	Section used for this span	**W18x40**
Mu : Applied	136.107 k-ft	Vu : Applied	15.123 k
Mn / Omega : Allowable	140.838 k-ft	Vn/Omega : Allowable	81.194 k
Load Combination	+D+S+H	Load Combination	+D+S+H
Location of maximum on span	18.000ft	Location of maximum on span	36.000 ft
Span # where maximum occurs	Span # 1	Span # where maximum occurs	Span # 1

Maximum Deflection

Max Downward L+Lr+S Deflection	1.073 in	Ratio =	402
Max Upward L+Lr+S Deflection	0.000 in	Ratio =	0 <360
Max Downward Total Deflection	2.233 in	Ratio =	193
Max Upward Total Deflection	0.000 in	Ratio =	0 <180

Maximum Forces & Stresses for Load Combinations

Load Combination		Max Stress Ratios		Summary of Moment Values							Summary of Shear Values		
Segment Length	Span #	M	V	Mmax +	Mmax -	Ma - Max	Mnx	Mnx/Omega	Cb	Rm	Va Max	Vnx	Vnx/Omega
+D													
Dsgn. L = 36.00 ft	1	0.391	0.075	55.11		55.11	235.20	140.84	1.00	1.00	6.12	121.79	81.19
+D+Lr+H													
Dsgn. L = 36.00 ft	1	0.621	0.120	87.51		87.51	235.20	140.84	1.00	1.00	9.72	121.79	81.19
+D+S+H													
Dsgn. L = 36.00 ft	1	0.966	0.186	136.11		136.11	235.20	140.84	1.00	1.00	15.12	121.79	81.19
+D+0.750Lr+0.750L+H													
Dsgn. L = 36.00 ft	1	0.564	0.109	79.41		79.41	235.20	140.84	1.00	1.00	8.82	121.79	81.19
+D+0.750L+0.750S+H													
Dsgn. L = 36.00 ft	1	0.823	0.159	115.86		115.86	235.20	140.84	1.00	1.00	12.87	121.79	81.19
+D+0.750Lr+0.750L+0.750W+H													
Dsgn. L = 36.00 ft	1	0.564	0.109	79.41		79.41	235.20	140.84	1.00	1.00	8.82	121.79	81.19
+D+0.750L+0.750S+0.750W+H													
Dsgn. L = 36.00 ft	1	0.823	0.159	115.86		115.86	235.20	140.84	1.00	1.00	12.87	121.79	81.19
+D+0.750Lr+0.750L+0.5250E+H													
Dsgn. L = 36.00 ft	1	0.564	0.109	79.41		79.41	235.20	140.84	1.00	1.00	8.82	121.79	81.19
+D+0.750L+0.750S+0.5250E+H													
Dsgn. L = 36.00 ft	1	0.823	0.159	115.86		115.86	235.20	140.84	1.00	1.00	12.87	121.79	81.19

Overall Maximum Deflections - Unfactored Loads

Load Combination	Span	Max. "-" Defl	Location in Span	Load Combination	Max. "+" Defl	Location in Span
	1	0.0000	0.000		0.0000	0.000

Vertical Reactions - Unfactored

Support notation : Far left is #1 Values in KIPS

Load Combination	Support 1	Support 2
Overall MAXimum	18.723	18.723
D Only	6.123	6.123
Lr Only	3.600	3.600

Zarosinski Engineering and Design
1400 NW 155th Circle
Vancouver, WA 98685
360-513-2746
Email: dzaro@zaroeng.com
By Dean P. Zarosinski PE

Title : General Equipment Canopy
Engineer: Dean P. Zarosinski PE
Project Desc.: Roof over Cleanout area

Job # H0065-1

Steel Beam

File: C:\AA WORK\2011 PROJECTS\H0267-1 Gen Equip\Calculations\h0267-1 gen equip calcs.ec6
ENERCALC, INC. 1983-2011, Build:6.12.3.14, Ver:6.12.3.14

Lic. # : KW-06009383 **Licensee : Zarosinski Engineering and Design, Inc.**

Description : Frame Beam

Vertical Reactions - Unfactored

Support notation : Far left is #1 Values in KIPS

Load Combination	Support 1	Support 2
S Only	9.000	9.000
Lr+S	12.600	12.600
D+Lr	9.723	9.723
D+S	15.123	15.123
D+Lr+S	18.723	18.723

Zarosinski Engineering and Design
1400 NW 155th Circle
Vancouver, WA 98685
360-513-2746
Email: dzaro@zaroeng.com
By Dean P. Zarosinski PE

Title :
Engineer:
Project Desc.:

Job #

2-D Frame Analysis

File: c:\AA WORK\2011 PROJECTS\H0267-1 Gen Equip\Calculations\h0267-1 gen equip calcs.ec6
ENERCALC, INC. 1983-2011, Build:6.12.3.4, Ver:6.12.3.4

Lic. # : KW-06009383 **Licensee : Zarosinski Engineering and Design, Inc.**

Description : Middle Fram General Equipment

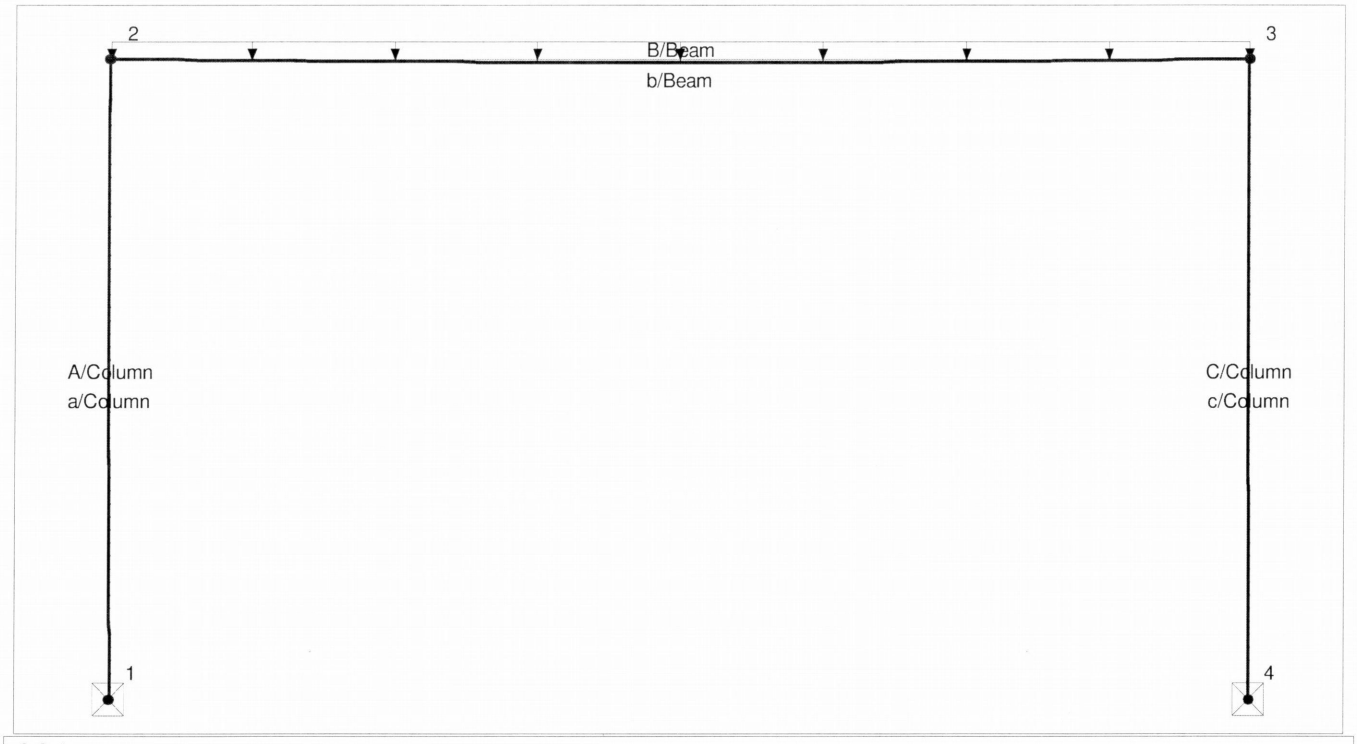

Joints...

Joint Label	Joint Coordinates X ft	Joint Coordinates Y ft	X Restraint	Y Restraint	Z Restraint	Joint Temp deg F
1	0.0	0.0	Fixed	Fixed	Fixed	0
2	0.0	20.0				0
3	36.0	20.0				0
4	36.0	0.0	Fixed	Fixed	Fixed	0

Members...

Member Label	Property Label	Endpoint Joints I Joint	Endpoint Joints J Joint	Member Length ft	I End Releases X	I End Releases Y	I End Releases Z	J End Releases X	J End Releases Y	J End Releases Z
A	Column	1	2	20.000	Fixed	Fixed	Pinne	Fixed	Fixed	Fixed
B	Beam	2	3	36.000	Fixed	Fixed	Fixed	Fixed	Fixed	Fixed
C	Column	3	4	20.000	Fixed	Fixed	Fixed	Fixed	Fixed	Free

Materials...

Member Label	Youngs ksi	Density kcf	Thermal in/degr	Yield ksi
Default	1.00	0.000	0.000000	1.00
Steel	29,000.00	0.490	0.000650	36.00

Member Sections...

Prop Label	Group Tag	Material	Area	Depth	Width	Ixx	Iyy
Default	Group	Default	1.0 in^2	0.0 in	0.0 in	1.0 in^4	1.0 in^4
W10x12	Column	Steel	3.540 in^2	9.870 in	3.960 in	53.80 in^4	2.180 in^4
W18x40	Beam	Steel	11.80 in^2	17.90 in	6.020 in	612.0 in^4	19.10 in^4

Zarosinski Engineering and Design
1400 NW 155th Circle
Vancouver, WA 98685
360-513-2746
Email: dzaro@zaroeng.com
By Dean P. Zarosinski PE

Title :
Engineer:
Project Desc.:

Job #

2-D Frame Analysis

File: c:\AA WORK\2011 PROJECTS\H0267-1 Gen Equip\Calculations\h0267-1 gen equip calcs.ec6
ENERCALC, INC. 1983-2011, Build:6.12.3.4, Ver:6.12.3.4

Lic. # : KW-06009383 **Licensee : Zarosinski Engineering and Design, Inc.**

Description : Middle Fram General Equipment

Member Distributed Loads....

Member Label	Load Direction	Load Extents Start End ft		Load Magnitude Dead	Roof Live	Live	Snow	Seismic	Wind	Earth
B	Global Y	0.0	Start Mag :	0.30	0.20		0.50			k/ft
		36.0	End Mag :	0.30	0.20		0.50			k/ft

Load Combinations...

Load Combination Description	Group Multiplier	Self Weight Factors X	Y	Load Combination Factors Dead	Roof Live	Live	Snow	Seismic	Wind	Earth
+D+MbrWt(0,-1)	1.0		-1.0	1.0						
+D+L+H+MbrWt(0,-1)	1.0		-1.0	1.0		1.0				1.0
+D+Lr+H+MbrWt(0,-1)	1.0		-1.0	1.0	1.0					1.0
+D+S+H+MbrWt(0,-1)	1.0		-1.0	1.0			1.0			1.0
+D+0.750Lr+0.750L+H+MbrWt(0,-1)	1.0		-1.0	1.0	0.750	0.750				1.0
+D+0.750L+0.750S+H+MbrWt(0,-1)	1.0		-1.0	1.0		0.750	0.750			1.0
+D+W+H+MbrWt(0,-1)	1.0		-1.0	1.0					1.0	1.0
+D+0.70E+H+MbrWt(0,-1)	1.0		-1.0	1.0				0.70		1.0
+D+0.750Lr+0.750L+0.750W+H+MbrWt(0,-1)	1.0		-1.0	1.0	0.750	0.750			0.750	1.0
+D+0.750L+0.750S+0.750W+H+MbrWt(0,-1)	1.0		-1.0	1.0		0.750	0.750		0.750	1.0
+D+0.750Lr+0.750L+0.5250E+H+MbrWt(0,-1)	1.0		-1.0	1.0	0.750	0.750		0.5250		1.0
+D+0.750L+0.750S+0.5250E+H+MbrWt(0,-1)	1.0		-1.0	1.0		0.750	0.750	0.5250		1.0
+0.60D+W+H+MbrWt(0,-1)	1.0		-1.0	0.60					1.0	1.0
+0.60D+0.70E+H+MbrWt(0,-1)	1.0		-1.0	0.60				0.70		1.0
+1.40D+MbrWt(0,-1)	1.0		-1.0	1.40						
+1.20D+0.50Lr+1.60L+1.60H+MbrWt(0,-1)	1.0		-1.0	1.20	0.50	1.60				1.60
+1.20D+1.60L+0.50S+1.60H+MbrWt(0,-1)	1.0		-1.0	1.20		1.60	0.50			1.60
+1.20D+1.60Lr+0.50L+MbrWt(0,-1)	1.0		-1.0	1.20	1.60	0.50				
+1.20D+1.60Lr+0.80W+MbrWt(0,-1)	1.0		-1.0	1.20	1.60				0.80	
+1.20D+0.50L+1.60S+MbrWt(0,-1)	1.0		-1.0	1.20		0.50	1.60			
+1.20D+1.60S+0.80W+MbrWt(0,-1)	1.0		-1.0	1.20			1.60		0.80	
+1.20D+0.50Lr+0.50L+1.60W+MbrWt(0,-1)	1.0		-1.0	1.20	0.50	0.50			1.60	
+1.20D+0.50L+0.50S+1.60W+MbrWt(0,-1)	1.0		-1.0	1.20		0.50	0.50		1.60	
+1.20D+0.50L+0.20S+E+MbrWt(0,-1)	1.0		-1.0	1.20		0.50	0.20	1.0		
+0.90D+1.60W+1.60H+MbrWt(0,-1)	1.0		-1.0	0.90					1.60	1.60
+0.90D+E+1.60H+MbrWt(0,-1)	1.0		-1.0	0.90				1.0		1.60

Extreme Joint Displacements & Reactions

Only Load Combinations giving maximum values are listed

Joint Label		Joint Displacements X in	Y in	Z Radians	Joint Reactions X k	Y k	Z k-ft
1		0.0	0.0	0.0	1.468	22.022	
	Max	+0.60D+W+H+MbrWt(0,-1)	+0.60D+W+H+MbrWt(0,-1)		1.20D+0.50L+1.60S+MbrWt	1.20D+0.50L+1.60S+MbrWt	
		0.0	0.0	0.0	0.2693	4.236	
	Min	1.20D+0.50L+1.60S+MbrWt	1.20D+0.50L+1.60S+MbrWt		+0.60D+W+H+MbrWt(0,-1)	+0.60D+W+H+MbrWt(0,-1)	
2		-0.1369	-0.009622	-0.002743			
	Max	+0.60D+W+H+MbrWt(0,-1)	+0.60D+W+H+MbrWt(0,-1)	+0.60D+W+H+MbrWt(0,-1)			
		-0.7465	-0.05120	-0.01495			
	Min	1.20D+0.50L+1.60S+MbrWt	1.20D+0.50L+1.60S+MbrWt	1.20D+0.50L+1.60S+MbrWt			
3		-0.1373	-0.009469	0.01527			
	Max	+0.60D+W+H+MbrWt(0,-1)	+0.60D+W+H+MbrWt(0,-1)	1.20D+0.50L+1.60S+MbrWt			
		-0.7484	-0.05037	0.002801			
	Min	1.20D+0.50L+1.60S+MbrWt	1.20D+0.50L+1.60S+MbrWt	+0.60D+W+H+MbrWt(0,-1)			
4		0.0	0.0	0.0	-0.2693	21.666	6.407
	Max	1.20D+0.50L+1.60S+MbrWt	+0.60D+W+H+MbrWt(0,-1)	+0.60D+W+H+MbrWt(0,-1)	+0.60D+W+H+MbrWt(0,-1)	1.20D+0.50L+1.60S+MbrWt	1.20D+0.50L+1.60S+MbrWt
		0.0	0.0	0.0	-1.468	4.171	1.175
	Min	+0.60D+W+H+MbrWt(0,-1)	1.20D+0.50L+1.60S+MbrWt	1.20D+0.50L+1.60S+MbrWt	1.20D+0.50L+1.60S+MbrWt	+0.60D+W+H+MbrWt(0,-1)	+0.60D+W+H+MbrWt(0,-1)

Extreme Member End Forces

Only Load Combinations giving maximum values are listed

Member Label		Member " I " End Forces Axial k	Shear k	Moment k-ft	Member " J " End Forces Axial k	Shear k	Moment k-ft
A		22.022	0.3793	5.931	-3.995	1.468	1.656
	Max	1.20D+0.50L+1.60S+MbrWt	0.90D+E+1.60H+MbrWt(0,-	0.90D+E+1.60H+MbrWt(0,-	+0.60D+W+H+MbrWt(0,-1)	1.20D+0.50L+1.60S+MbrWt	0.90D+E+1.60H+MbrWt(0,-

Zarosinski Engineering and Design
1400 NW 155th Circle
Vancouver, WA 98685
360-513-2746
Email: dzaro@zaroeng.com
By Dean P. Zarosinski PE

Title :
Engineer:
Project Desc.:

Job #

2-D Frame Analysis

File: c:\AA WORK\2011 PROJECTS\H0267-1 Gen Equip\Calculations\h0267-1 gen equip calcs.ec6
ENERCALC, INC. 1983-2011, Build:6.12.3.4, Ver:6.12.3.4

Lic. # : KW-06009383 **Licensee : Zarosinski Engineering and Design, Inc.**

Description : Middle Fram General Equipment

Extreme Member End Forces

Only Load Combinations giving maximum values are listed

Member Label	Member " I " End Forces Axial k	Shear k	Moment k-ft	Member " J " End Forces Axial k	Shear k	Moment k-ft
A	4.236	-1.468	0.0	-21.781	-0.3793	-29.356
Min	*+0.60D+W+H+MbrWt(0,-1)*	*'.20D+0.50L+1.60S+MbrWt*	*+D+MbrWt(0,-1)*	*'.20D+0.50L+1.60S+MbrWt*	*0.90D+E+1.60H+MbrWt(0,-*	*'.20D+0.50L+1.60S+MbrWt*
B	5.537	21.781	29.356	-0.2693	21.425	1.656
Max	*0.90D+E+1.60H+MbrWt(0,-*	*'.20D+0.50L+1.60S+MbrWt*	*'.20D+0.50L+1.60S+MbrWt*	*+0.60D+W+H+MbrWt(0,-1)*	*'.20D+0.50L+1.60S+MbrWt*	*0.90D+E+1.60H+MbrWt(0,-*
B	0.2693	0.3793	5.385	-5.778	-0.3793	-22.949
Min	*+0.60D+W+H+MbrWt(0,-1)*	*0.90D+E+1.60H+MbrWt(0,-*	*+0.60D+W+H+MbrWt(0,-1)*	*0.90D+E+1.60H+MbrWt(0,-*	*0.90D+E+1.60H+MbrWt(0,-*	*'.20D+0.50L+1.60S+MbrWt*
C	21.425	1.468	22.949	-4.171	-0.2693	6.407
Max	*'.20D+0.50L+1.60S+MbrWt*	*'.20D+0.50L+1.60S+MbrWt*	*'.20D+0.50L+1.60S+MbrWt*	*+0.60D+W+H+MbrWt(0,-1)*	*+0.60D+W+H+MbrWt(0,-1)*	*'.20D+0.50L+1.60S+MbrWt*
C	3.930	0.2693	4.210	-21.666	-1.468	1.175
Min	*+0.60D+W+H+MbrWt(0,-1)*	*+0.60D+W+H+MbrWt(0,-1)*	*+0.60D+W+H+MbrWt(0,-1)*	*'.20D+0.50L+1.60S+MbrWt*	*'.20D+0.50L+1.60S+MbrWt*	*+0.60D+W+H+MbrWt(0,-1)*

Extreme Member Forces

Only Load Combinations giving maximum values are listed

Mmbr Label	Axial	Dist from "I" Joint	Moment	Dist from "I" Joint	Shear	Dist from "I" Joint
A	22.022k	0.0 ft	29.356 k-ft	20.0 ft	-0.2693 k	0.0 ft
Max	*+1.20D+0.50L+1.60S+MbrWt(0,-1)*		*+1.20D+0.50L+1.60S+MbrWt(0,-1)*		*+0.60D+W+H+MbrWt(0,-1)*	
	3.995k	20.0 ft	0.0 k-ft	0.0 ft	-1.468 k	0.0 ft
Min	*+0.60D+W+H+MbrWt(0,-1)*		*+D+MbrWt(0,-1)*		*+1.20D+0.50L+1.60S+MbrWt(0,-1)*	
B	1.468k	0.0 ft	29.356 k-ft	0.0 ft	21.781 k	0.0 ft
Max	*+1.20D+0.50L+1.60S+MbrWt(0,-1)*		*+1.20D+0.50L+1.60S+MbrWt(0,-1)*		*+1.20D+0.50L+1.60S+MbrWt(0,-1)*	
	0.2693k	0.0 ft	-168.26 k-ft	18.367 ft	-21.425 k	36.0 ft
Min	*+0.60D+W+H+MbrWt(0,-1)*		*+1.20D+0.50L+1.60S+MbrWt(0,-1)*		*+1.20D+0.50L+1.60S+MbrWt(0,-1)*	
C	21.666k	20.0 ft	22.949 k-ft	0.0 ft	1.468 k	0.0 ft
Max	*+1.20D+0.50L+1.60S+MbrWt(0,-1)*		*+1.20D+0.50L+1.60S+MbrWt(0,-1)*		*+1.20D+0.50L+1.60S+MbrWt(0,-1)*	
	3.930k	0.0 ft	-6.407 k-ft	20.0 ft	0.2693 k	0.0 ft
Min	*+0.60D+W+H+MbrWt(0,-1)*		*+1.20D+0.50L+1.60S+MbrWt(0,-1)*		*+0.60D+W+H+MbrWt(0,-1)*	

7200
1600
1650
1600

11,050 SQ FT

80 × 1400 = 112000

$$\frac{11050}{112000} = 10\%$$ LOT COVERAGE

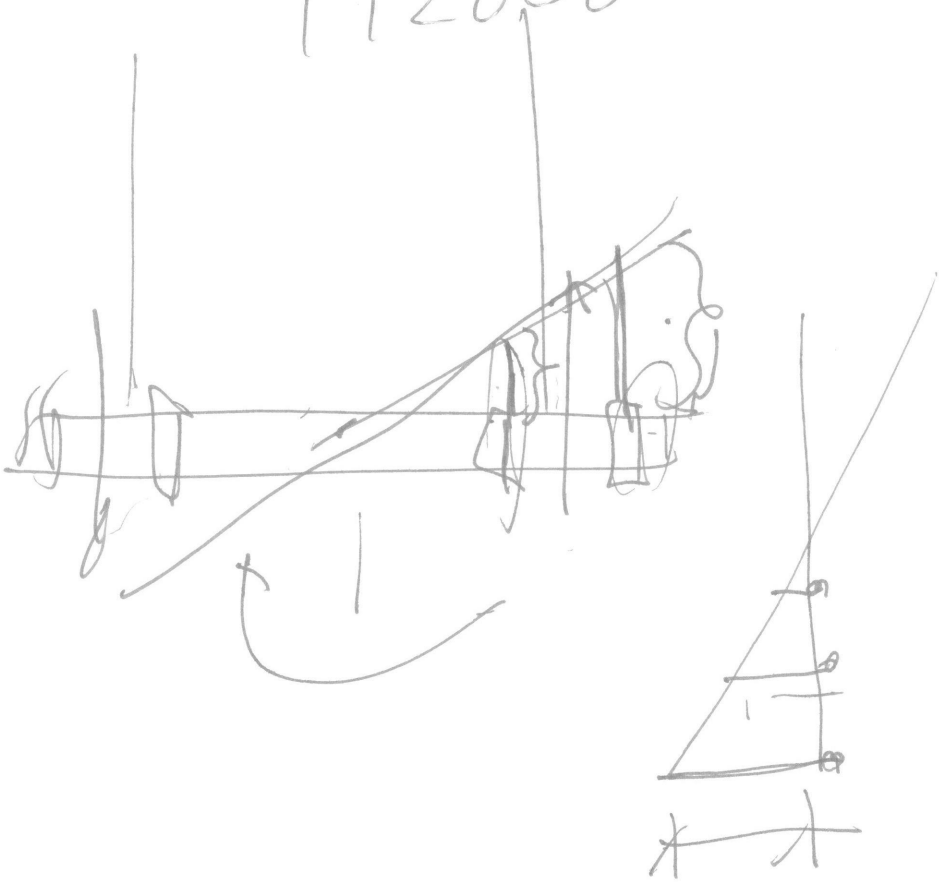

Zarosinski Engineering & Design, Inc.
1400 NW 155th Circle
Vancouver, WA 98685
Phone: (360) 513-2746
Email: dzaro@zaroeng.com

ZAROSINSKI ENGINEERING & DESIGN
STRUCTURAL • CIVIL • DESIGN

Calculations for Roof Canopy by Dean P. Zarosinski PE

MOMENT AT MAX (MID BEAM) = 139^{75} K-FT

139^{75} K·FT × 12"/FT = 1677 K·IN

MOMENT ARM @ BASEPLATE = 1'-10" = 22"

1677 ÷ 22" = 76^{22} K, 76^{22} K ÷ 6 BOLTS = 12^{7} K

12^{7} K TENSION / BOLT, ALLOWABLE LOAD = 26^{5} K/

SHEAR LOAD @ MIDSPAN = 0, CALCULATE W/

1/2 END REACTION = 13K W/ THREADS IN

SHEAR PLANE = 9^{3} K / BOLT, 13K / 12 BOLTS = 1^{08} K

LOAD ON BOLT = 12^{7} K T + 1^{08} K SHEAR

$$\frac{12^{7}\text{K}}{26^{5}\text{K}} + \frac{1^{08}}{9^{3}} = 0^{59}\ \%$$ OF ALLOWABLE COMBINED TENSION & SHEAR

LOAD 18 LF × 10 PSF = 180 lb/FT × 18^{5} = 3330 lb DL

LL = 25 PSF = 2^{5} × 3330 = 8325 lb

Zarosinski Engineering & Design, Inc.
1400 NW 155th Circle
Vancouver, WA 98685
Phone: (360) 513-2746
Email: dzaro@zaroeng.com

Calculations for New Roof Structure @ 6767 NE Columbia Blvd., Portland, Oregon March 6, 2012
By Dean P. Zarosinski PE

$40' \times 41\frac{25}{}' \times 15$ PSF = 24,750 lb DL, ÷ 6 COLUMNS = $4\frac{13}{}$ K/c

$4\frac{13}{}$ K @ 20' ABOVE GRADE USE MOMENT FRAME

AT ALL N.-S FRAMES WITH PORTAL FRAME IN L DIRECTION ON EACH SIDE. MONO SLOPE TO NW

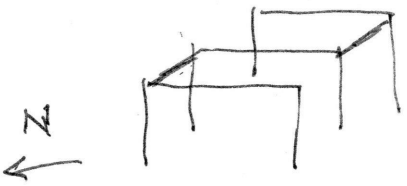

WEIGHT ON N-S FRAME - MIDDLE IS HEAVIEST LOAD.

20' x 40' x 15 PSF = 12 K

SEISMIC LOAD CALCULATED PER ASCE 7-10 PROVIDES A BASE SHEAR OF $2\frac{5}{}$ K WITH A BASE MOMENT OF 50'-K.

APPLYING THIS SHEAR / 2 COLUMNS = $1\frac{25}{}$ K / COLUMN ACTIN AT COLUMN TOP.

WIND LATERAL USE 3' EXPOSURE x 15 x 40' = $1\frac{8}{}$ K ÷ 2 COL = 0'

USE $1\frac{0}{}$ K WIND @ COLUMN TOP.

W12x22 COLUMNS W/ W18x40 BEAM

MOMENT @ CONNECTION OF COLUMN TO BEAM

MAX = $61\frac{19}{}$ K. FT.

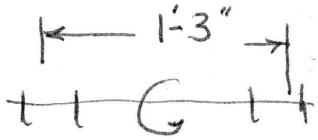

$\frac{61\frac{19}{}}{1\frac{25}{}} = 49$ K

49 K ÷ 4 BOLTS = $12\frac{24}{}$ K / BOLT, 3/4 A325 = $19\frac{4}{}$ K OK

Zarosinski Engineering & Design, Inc.
1400 NW 155th Circle
Vancouver, WA 98685
Phone: (360) 513-2746
Email: dzaro@zaroeng.com

Calculations for New Roof Structure @ 6767 NE Columbia Blvd., Portland, Oregon March 6, 2012
By Dean P. Zarosinski PE

LATERAL FORCE OPPISITE FRAME IS TAKEN OUT W/ CABLE

1.4K (W)
1.7K (S)

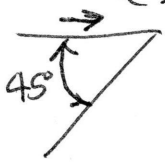

SHEAR LOAD DUE TO SEISMIC FOR 1/2 ROOF

ROOF WT = 40 x 41.25 x 10 PSF = 16.5 K

SEISMIC BASE SHEAR = 3.38 K / 2 SIDES

FOR BRACING = 1.7 K SEISMIC

WIND LOAD = $\frac{10'}{2}$ x 40 x 14 PSF = 2.8 K, ÷ 2 SIDES

FOR BRACING 1.4 K WIND

USE 2 K FOR DESIGN 2 K x 1.414 = TENSION IN CABLE = 2.828

USE 3 K FOR MIN. CABLE CAPACITY

1/2" DIA. 6 STRAND x 19 WIRE ALLOWABLE LOAD = 4280 lb OK

FOR 1/2" WIRE ROPE USE (3) CLIPS SPACED MIN. (3) THREE INCHES APART.

WELD OF CLIP TO STRUCTURE

4" x 4" x 1/2" PLATE WITH 3" x 3/16 FILLET x 2 SIDES

3 x 3 x 0.9 x 2 = 16.2 K OK

Zarosinski Engineering & Design, Inc.
1400 NW 155th Circle
Vancouver, WA 98685
Phone: (360) 513-2746
Email: dzaro@zaroeng.com

Calculations for New Roof Structure @ 6767 NE Columbia Blvd., Portland, Oregon — March 6, 2012
By Dean P. Zarosinski PE

TO TRANSFER SEISMIC LOADING & WIND LOADING USE CABLE BRACING AT ROOF

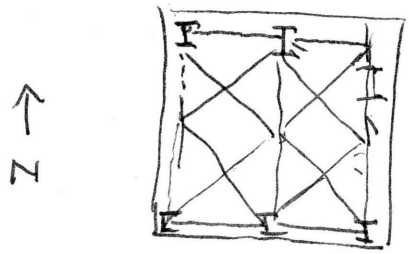

DIAGONAL CABLE TO DRAG 1/2 OF SIDE LOAD TO COMPRESSION MEMBER ON ROOF EDGE LOAD = 1/2 (17 K) USE 10 K

10 K × 1.414 = 14.14 K TENSION (USE 20 K)

USE 3/8" CABLE WITH (3) CABLE CLAMPS PER CABLE END

USE 6" LONG × 1/2" TAB WELDED TO W18 W/ (5) FOUR INCHES OF 3/16 FILLET ON EA. SIDE

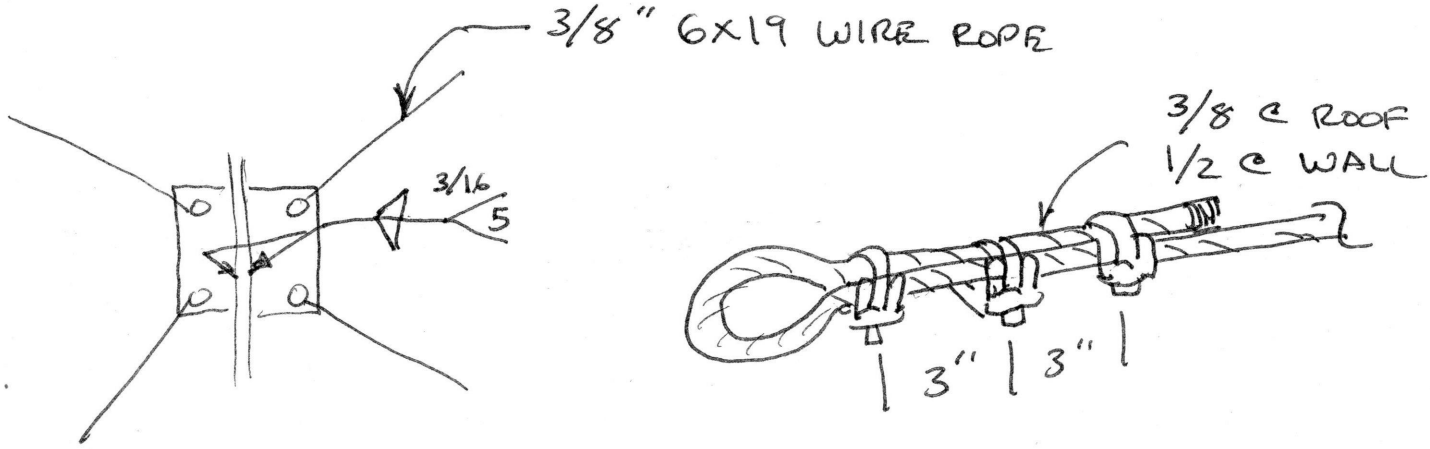

COLUMN CHECK FOR PERIMITER MEMBER

L = 18' CHECK UNBRACED LENGTH.

Zarosinski Engineering & Design, Inc.
1400 NW 155th Circle
Vancouver, WA 98685
Phone: (360) 513-2746
Email: dzaro@zaroeng.com

Calculations for New Roof Structure @ 6767 NE Columbia Blvd., Portland, Oregon March 6, 2012
By Dean P. Zarosinski PE

8 x 11.5 CHANNEL WILL SUPPORT COMPRESSIVE FORCE AS WELL AS PERIMETER TENSILE FORCES

NOTE LOADS IN RANGE OF 2.0 K (LATERALLY) ARE EASILY RESISTED BY MEMBERS. ECCENTRICITY OF CROSS BRACING LOCATIONS IS NOT A SIGNIFICANT FACTOR IN THIS STRUCTURE.

JOIST CHECK @ 4.0 SPACING.

$$M = \frac{wl^2}{8} = \quad w = (0.01\,L_R + 0.025\,S_L)\,4.0$$

USE $(0.016\,L_R + 0.025\,S_L) \times 4 = 0.164$ K/FT

OR 0.014 K/IN

$$l = 12 \times 18.75 = 225$$

$$\frac{0.014\ \text{K/IN} \times 225\ \text{IN.}^2}{8} = 88.59\ \text{K·IN}$$

PER NORTH AMERICAN COLD FORMED STEEL DESIGN 50KSI

USE Z SECTION W/ LIPS 8ZS2.25X059

CHECK END CHANNEL W/ 2' LOAD

Zarosinski Engineering & Design, Inc.
1400 NW 155th Circle
Vancouver, WA 98685
Phone: (360) 513-2746
Email: dzaro@zaroeng.com

PP-5

ZAROSINSKI ENGINEERING & DESIGN
STRUCTURAL • CIVIL • DESIGN

Calculations for New Roof Structure @ 6767 NE Columbia Blvd., Portland, Oregon March 6, 2012
By Dean P. Zarosinski PE

USE $1/2\,w = \frac{0.007 \times 225\,IN^2}{8} = 44.30$ K·IN

C SECTION W/O LIPS USE 50KSI 800T150-68

CANTILEVER WITHIN DESIGN LIMITS

$M = \frac{0.007 \times 37^2}{2} = 4.7$ K·IN OK.

MAX. FOUNDATION LOAD

$20' \times 20.625 \times 0.01\,K/FT^2\,L_R + 0.025\,K/FT^2\,S_L$

$= 4.125\,K\,L_R + 10.31\,S_L$ USE $1.2(4.125) + 10.31(1)\,S_L$

$= 6.95$ K

$6.95 - 1.5\,KSF = 4.63$ SQ FT

USE 30 x 30 x 18" FOOTING

CHECK UPLIFT 20 x 21 x 10 PSF − 0.6 10 PSF

= 1,680 lb − 3x3x1.5 x 150 = 2025 + COLUMN OK

Steel-Framed Wall Assemblies continued

1-Hour Fire Rating

Design Reference: UL V490

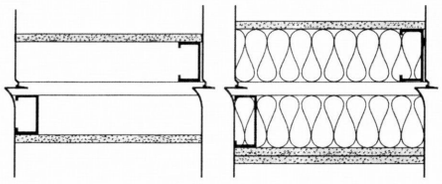

RECEIVED
JUN 13 2012
BDS
DOCUMENT SERVICES

63 STC Sound Trans.

Test Reference: RAL TL 09-333
Partition Thickness: 7-1/4" (184 mm)
Weight per Sq. Ft.: 7.0 (34 Kg/m²)

5/8" (15.9 mm) DensArmor Plus® Fireguard® interior panels applied to one side of a double row of 2-1/2" (64 mm) 25-gauge (18 mils) steel studs 24" (610 mm) o.c. and not less than 1" (25 mm) apart with 1" (25 mm) Type S drywall screws 8" (203 mm) o.c. when applied horizontally to studs and 8" (203 mm) at vertical and bottom edges and 12" (305 mm) o.c. at intermediate studs when applied vertically to studs.

5/8" (15.9 mm) DensArmor Plus Fireguard interior panels applied vertically or horizontally to studs with 1" (25 mm) Type S drywall screws 8" (203 mm) o.c. when applied horizontally to studs and 8" (203 mm) at vertical and bottom edges and 12" (305 mm) o.c. at intermediate studs when applied vertically to studs.

Vertical joints centered over studs and staggered one stud cavity on opposite sides of studs. Horizontal joints need not be backed by framing. Horizontal joints on opposite sides need not be staggered. Lateral bracing on both sides of the wall not less than 5 feet on center vertically.

Sound tested with a second layer of 5/8" (15.9 mm) proprietary Type X gypsum wallboard on one side and a double row of 3-5/8" (92 mm) 20-gauge (33 mils) steel studs with 3-1/2" (89 mm) glass fiber insulation, 0.5 pcf, on both sides in cavity. (NLB)

2-Hour Fire Rating

Design Reference: UL V487, cUL V487

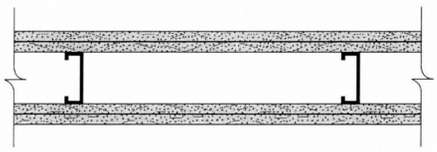

Partition Thickness: 4-1/8" (105 mm)
Weight per Sq. Ft: 10.0 (49 kg/m²)

Base Layer: 5/8" (15.9 mm) ToughRock® Fireguard® or 5/8" (15.9 mm) DensArmor Plus Fireguard gypsum board applied horizontally or vertically to each side of 1-5/8" (41 mm) steel studs 24" (610 mm) o.c. with 1" (25 mm) Type S screws 24" (610 mm) o.c.

Face Layer: 5/8" (15.9 mm) ToughRock Fireguard or 5/8" (15.9 mm) DensArmor Plus Fireguard gypsum board applied horizontally or vertically to each side with 1-5/8" (41 mm) Type S screws 16" (406 mm) o.c. Vertical joints centered over studs and staggered one stud cavity on opposite sides of studs. Vertical joints in adjacent layers staggered one stud cavity. Horizontal joints need not be backed by steel framing. Horizontal edge joints and horizontal butt joints on opposite sides of studs need not be staggered. Horizontal edge joints and horizontal butt joints in adjacent layers staggered a min of 12" (305 mm)

2-Hour Fire Rating

Design Reference: UL U411, cUL U411

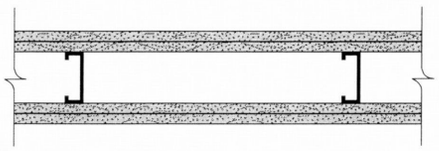

50-54 STC Sound Trans.

Test Reference: WHI 218-1
Partition Thickness: 5-1/8" (130 mm)
Weight per Sq. Ft.: 10.0 (49 kg/m²)

Sound Tested with 2-1/2" (64 mm) fiberglass insulation

Base Layer: 5/8" (15.9 mm) ToughRock Fireguard or 5/8" (15.9 mm) DensArmor Plus Fireguard gypsum board applied vertically to each side of 2-1/2" (64 mm) steel studs 24" (610 mm) o.c. with 1" (25 mm) Type S screws 16" (406 mm) o.c.

Face Layer: 5/8" (15.9 mm) ToughRock Fireguard or 5/8" (15.9 mm) DensArmor Plus Fireguard gypsum board applied vertically to each side with drywall adhesive or secured with 1-5/8" (41 mm) Type S screws 12" (305 mm) o.c. at top and bottom track, 16" (406 mm) o.c. at edge joints and intermediate framing. Stagger joints 24" (610 mm) each layer and side.

2-Hour Fire Rating

Design Reference: UL U411, cUL U411, GA WP 1522

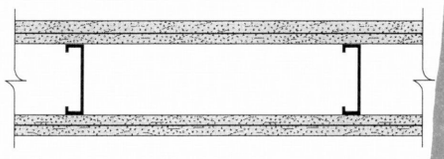

55-59 STC Sound Trans.

Test Reference: NRCC 818-NV
Partition Thickness: 6-1/8" (156 mm)
Weight per Sq. Ft.: 10.0 (49 kg/m²)

Sound Tested with 3-1/2" (89 mm) fiberglass insulation, friction fit in 3-5/8" (92 mm) stud space

Base Layer: 5/8" (15.9 mm) ToughRock Fireguard or 5/8" (15.9 mm) DensArmor Plus Fireguard gypsum board applied vertically to each side of 3-5/8" (92 mm) steel studs 24" (610 mm) o.c. with 1" (25 mm) Type S screws 16" (406 mm) o.c.

Face Layer: 5/8" (15.9 mm) ToughRock Fireguard or 5/8" (15.9 mm) DensArmor Plus Fireguard gypsum board applied vertically to each side with drywall adhesive or secured with 1-5/8" (41 mm) Type S screws 12" (305 mm) o.c. at top and bottom track, 16" (406 mm) o.c. at edge joints and intermediate framing. Stagger joints 24" (610 mm) each layer and side.

CAUTION: For important fire, safety and use information, go to page 7.

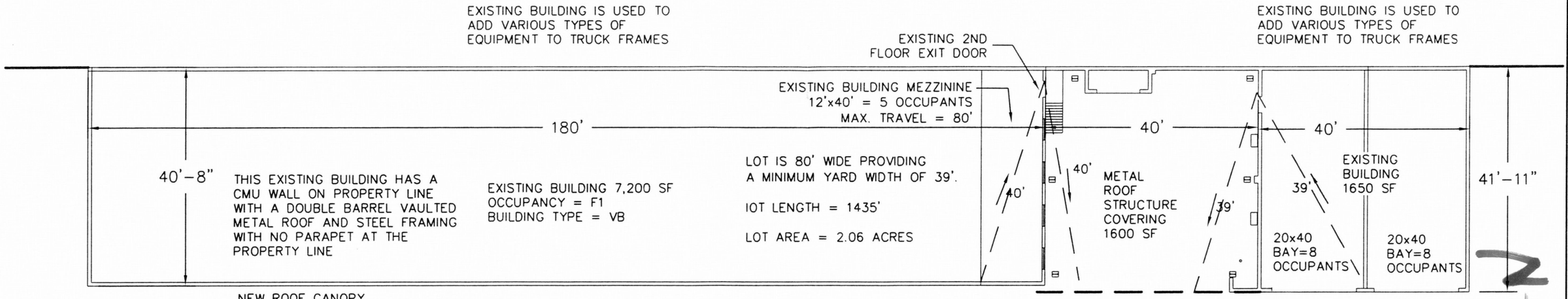

B / C1 OVERALL BUILDING FLOOR PLAN

SCALE: 1"=20'

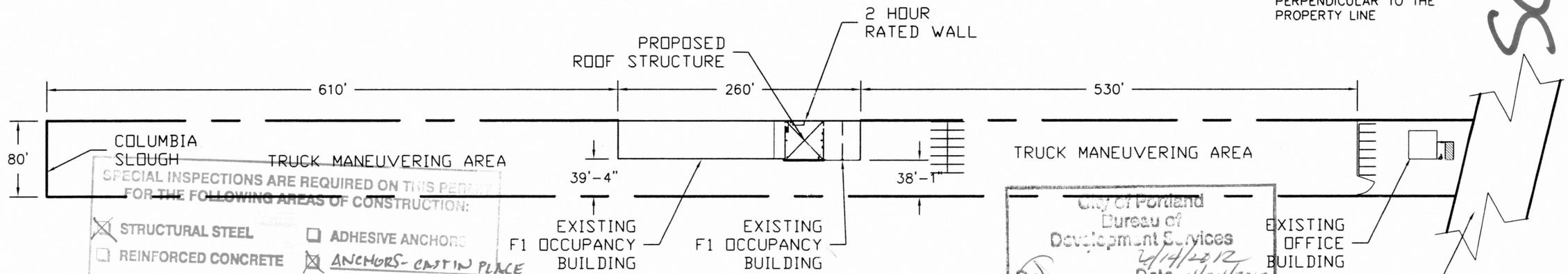

A / C1 OVERALL SITE PLAN

SCALE: N.T.S.

SPECIAL INSPECTIONS ARE REQUIRED ON THIS PERMIT FOR THE FOLLOWING AREAS OF CONSTRUCTION:

- [x] STRUCTURAL STEEL
- [ ] ADHESIVE ANCHORS
- [ ] REINFORCED CONCRETE
- [x] ANCHORS- CAST IN PLACE
- [ ] STRUCTURAL OBSERVATION BY THE ENGINEER IS TO OCCUR AT THE FOLLOWING STAGES OF CONSTRUCTION:

City of Portland
Bureau of Development Services
4/14/2012
Date 4/24/2012
By
Approved by Planning and Zoning Review

City of Portland
REVIEWED FOR CODE COMPLIANCE
JUL 09 2012
Permit Number

THE PURPOSE OF THIS PERMIT IS TO PLACE A ROOF OVER AN EXISTING CONCRETE SLAB THAT DRAINS TO A COLLECTION POINT FOR OFFSITE DISPOSAL THIS COVER IS TO COMPLY WITH B.E.S. REQUIREMENTS. THE STRUCTURE JOINS TWO ADJACENT STRUCTURES AND MEETS THE CONSTRUCTION TYPE V PER THE 2010 OSSC. THIS BUILDING TYPE, WITH AN OCCUPANCY CLASSIFICATION OF F-1 MODERATE HAZARD AUTOMOTIVE, HAS AN ALLOWABLE AREA OF 8,500 SQ. FEET. AN 31.3 % INCREASE IS ALLOWED BECAUSE OF THE THREE YARDS TOTALING 11,197 SQ. FT.. THE COMBINED AREA OF THE TWO EXISTING BUILDINGS AND THE NEW ROOF STRUCTURE IS 10, 450 SQ. FT.

THE PRE-ENGINEEREED METAL BUILDING SHALL HAVE A 2 HOUR RATED WALL TO THE UNDERSIDE OF THE NON-CUMBUSTABLE ROOF STRUCTURE. COLUMNS SUPPORTING THIS WALL WILL ALSO REQUIRE A 2 HOUR RATING. THE WEST END AND UPPER EDGES OF THE NORTH AND SOUTH SIDE ARE OPEN AND THIS PORTION IS A NON-HEATED STRUCTURE.. THERE ARE NO ADDED DOORS OR WINDOWS.

SHEET INDEX

C1 OVERALL BUILDING WITH SITE PLAN AND CODE SUMMARY
A1 ROOF CANOPY PARTIAL FLOOR PLAN AND FRAME SECTIONS
S1 ROOF CANOPY FOUNDATION PLAN AND DETAILS
S2 ROOF CANOPY FRAMING PLAN AND ELEVATIONS
S3 NOTES AND ROOF DETAIL
BES1 SAITARY AND STORM SHEET

EXPIRES 6/30/2012
REGISTERED PROFESSIONAL ENGINEER 16478 OREGON MAR 16, 1993 DEAN P. ZAROSINSKI

RECEIVED
JUN 13 2012
BDS DOCUMENT SERVICES

OVERAL BUILDING WITH SITE PLAN

ROOF CANOPY FOR GENERAL EQUIPMENT
6767 NE COLUMBIA BLVD.
PORTLAND OREGON

ZARO_CAD_FILE:H0065-1.DWG

Zarosinski Engineering & Design
1400 NW 155th Circle
Vancouver, WA. 98685
PHONE: (360) 513-2746
EMAIL: dzaro@zaroeng.com

DRAWN BY:	DPZ
DATE:	DPZ
6-13-12	
JOB NO.	H0267-1
DWG. NO.	H0267-1
SCALE	NOTED
SHEET	C1

12-138833 CO
SCAN
3-2

15-133823-CO-S
২৮৮

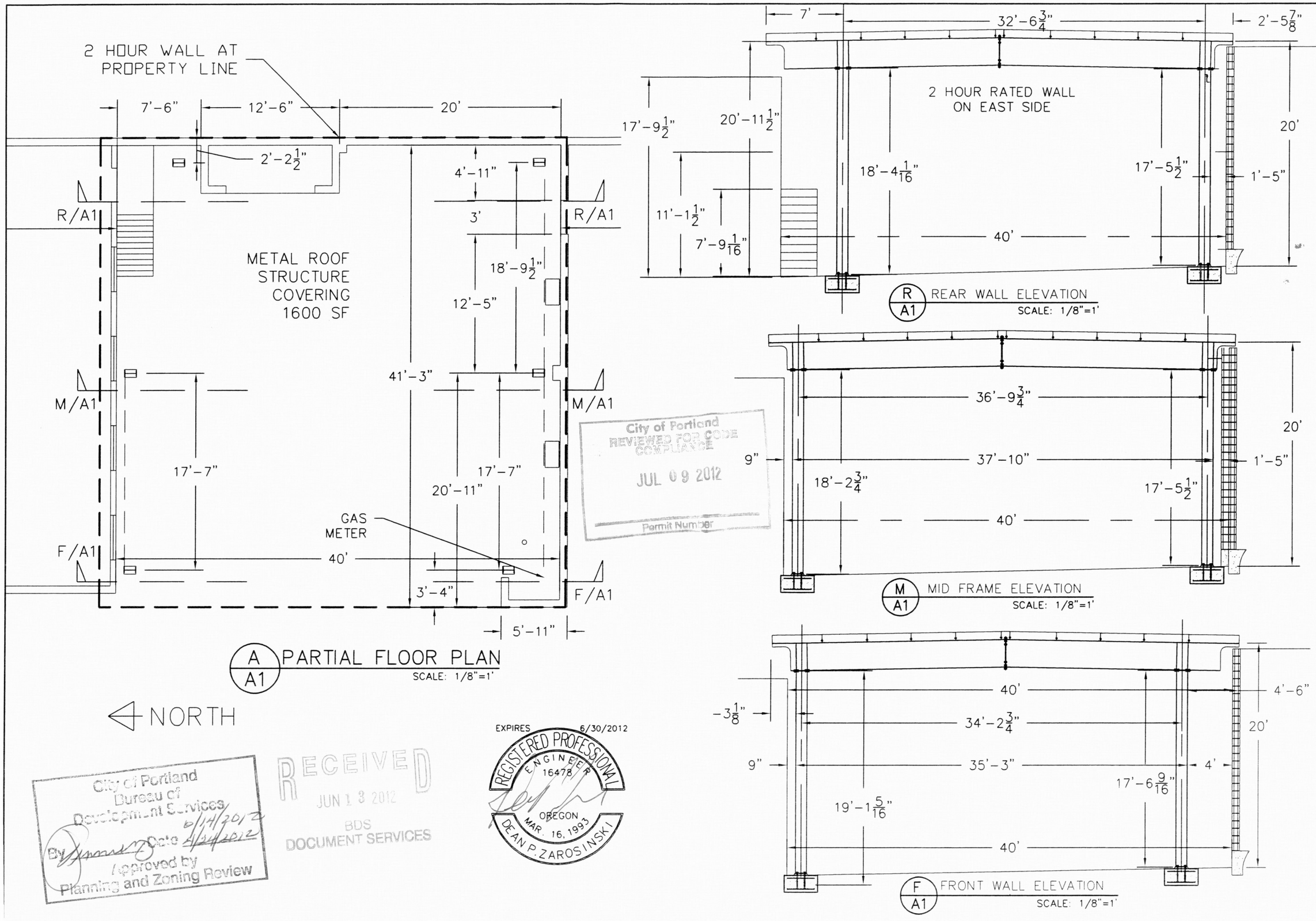

City of Portland
REVIEWED FOR CODE COMPLIANCE
JUL 09 2012
Permit Number

City of Portland
Bureau of
Development Services
6/14/2012
By Date 6/14/2012
Approved by
Planning and Zoning Review

RECEIVED
JUN 13 2012
BDS
DOCUMENT SERVICES

EXPIRES 6/30/2012
REGISTERED PROFESSIONAL ENGINEER
16478
OREGON
MAR. 16, 1993
DEAN P. ZAROSINSKI

SUBTITLE: ROOF CANOPY PLAN AND FRAME SECTIONS

TITLE: ROOF CANOPY FOR GENERAL EQUIPMENT
6767 NE COLUMBIA BLVD.
PORTLAND OREGON

ZARO CAD FILE:H0065-1.DWG

Zarosinski Engineering & Design
1400 NW 155th Circle
Vancouver, WA. 98685
PHONE: (360) 513-2746
EMAIL: dzaro@zaroeng.com

DRAWN BY: DPZ DATE: DPZ
6-13-12

JOB NO: H0267-1
DWG. NO: H0267-1
SCALE: NOTED
SHEET: A1

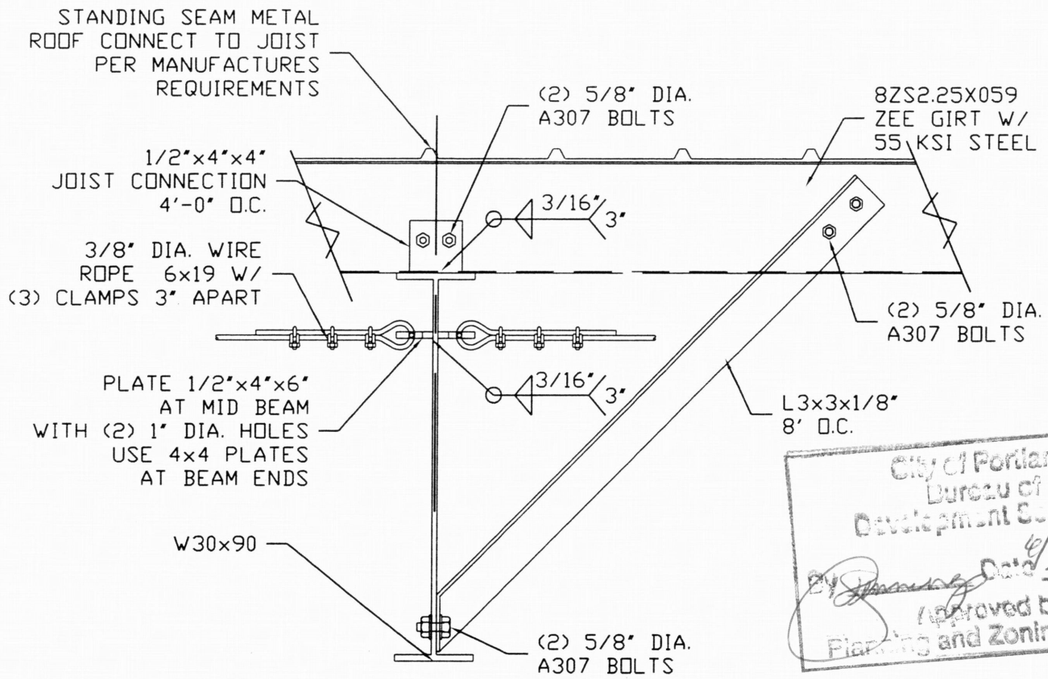

BJ S1 BRACE AND JOIST CONNECTION

SCALE: 1"=1'-0"

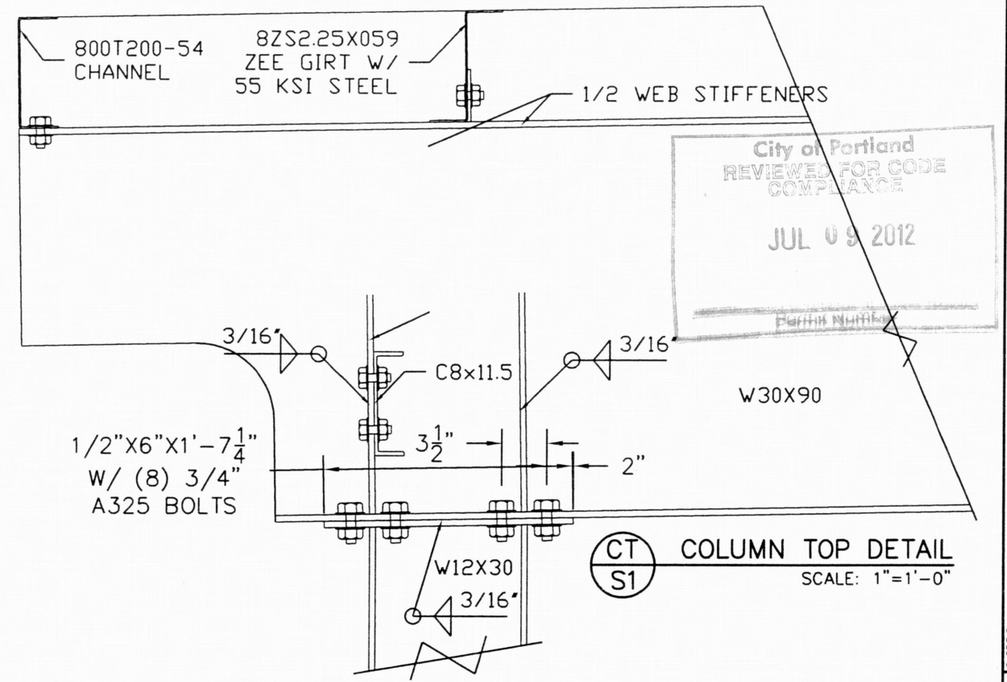

CT S1 COLUMN TOP DETAIL

SCALE: 1"=1'-0"

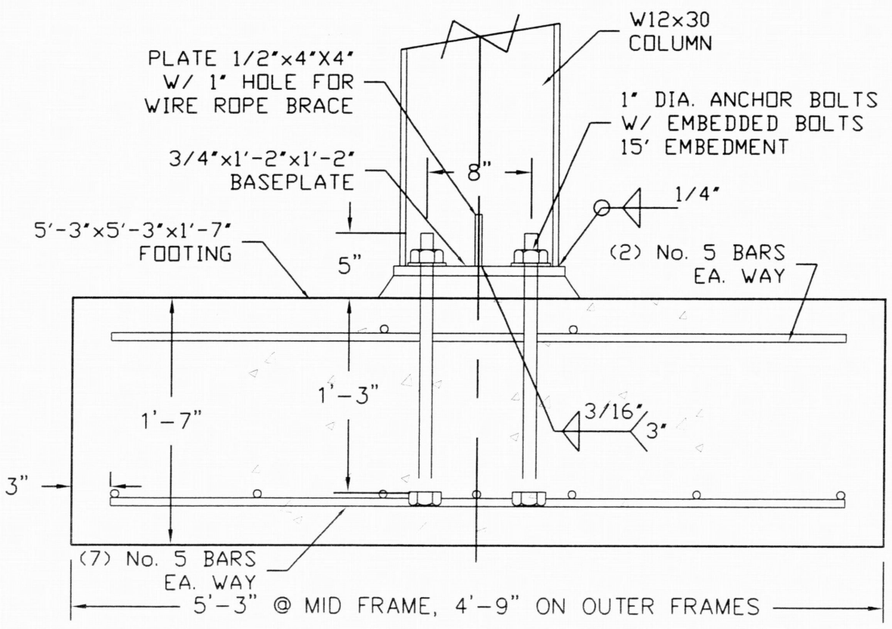

FD S1 FOUNDATION DETAIL

SCALE: 1"=1'-0"

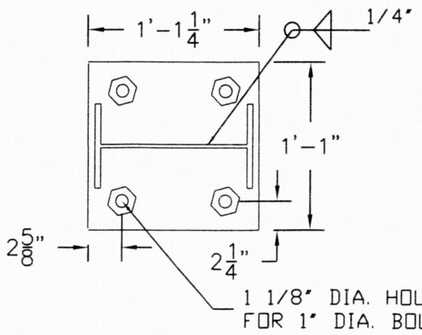

BP S1 COLUMN BASE

SCALE: 1"=1'

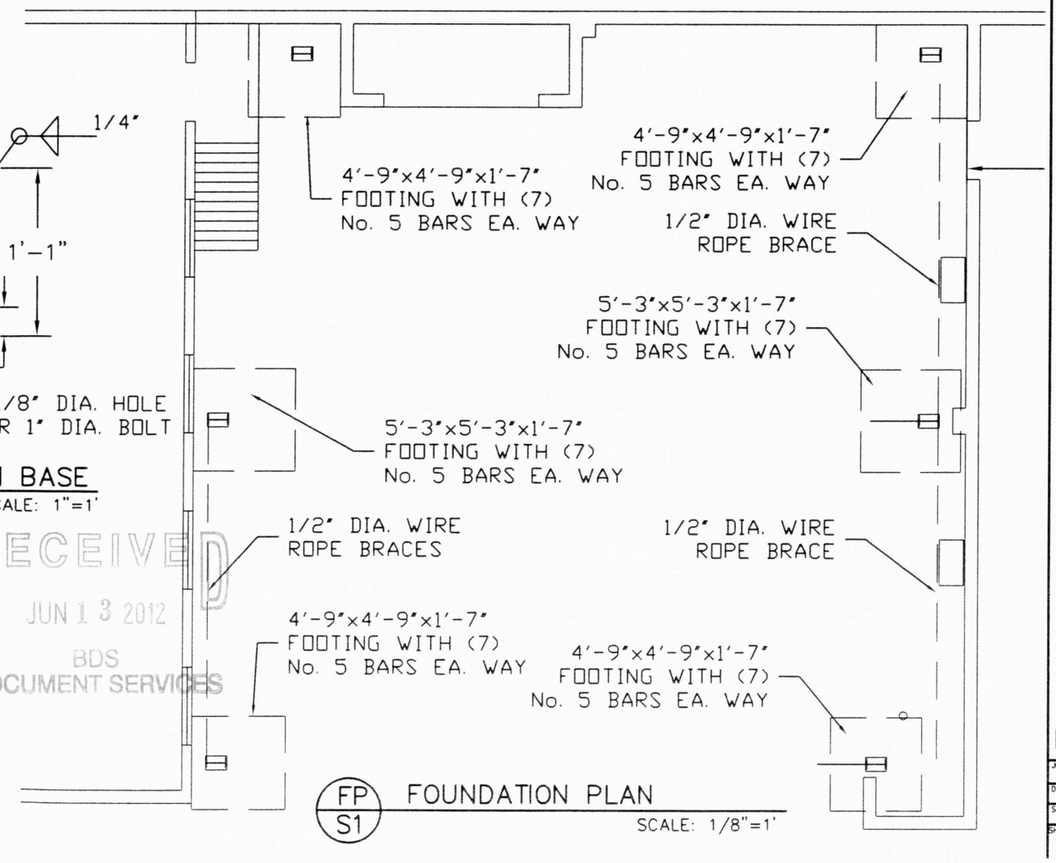

FP S1 FOUNDATION PLAN

SCALE: 1/8"=1'

City of Portland
Bureau of Development Services
6/14/2012
By Date 6/24/2012
Approved by
Planning and Zoning Review

City of Portland
REVIEWED FOR CODE COMPLIANCE
JUL 09 2012
Permit Number

RECEIVED
JUN 13 2012
BDS
DOCUMENT SERVICES

EXPIRES 6/30/2012
REGISTERED PROFESSIONAL ENGINEER 16478 OREGON MAR. 16, 1993 DEAN P. ZAROSINSKI

SUBTITLE: ROOF CANOPY FOUNDATION PLAN AND DETAILS

TITLE: ROOF CANOPY FOR GENERAL EQUIPMENT
6767 NE COLUMBIA BLVD.
PORTLAND OREGON

ZARO CAD FILE:H0065-1.DWG

Zarosinski Engineering & Design
1400 NW 155th Circle
Vancouver, WA. 98685
PHONE: (360) 513-2746
EMAIL: dzaro@zaroeng.com

DRAWN BY: DPZ
DATE: 6-13-12
DPZ

JOB NO: H0267-1
DWG. NO: H0267-1
SCALE: NOTED
SHEET: S1

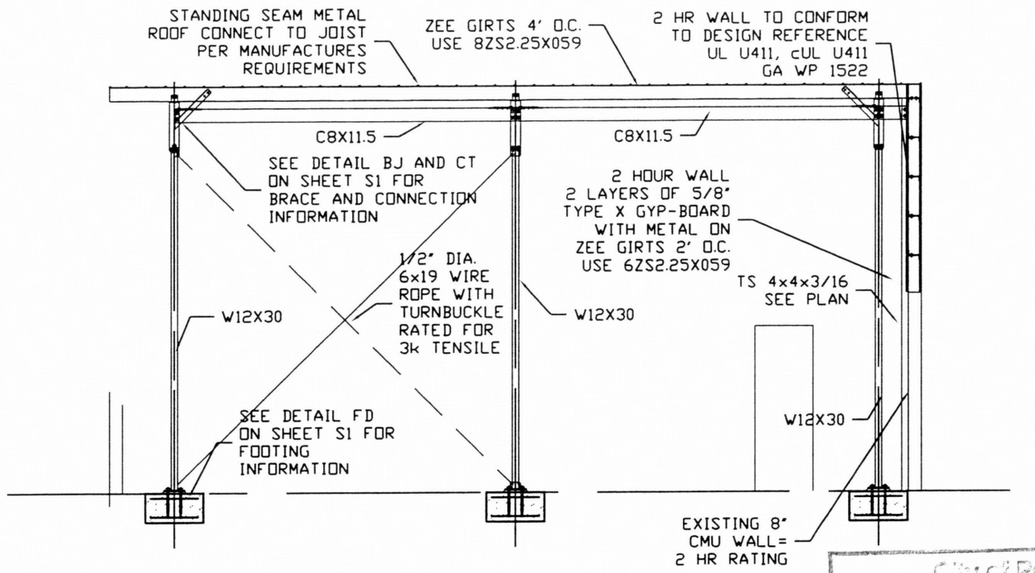

NE/S2 NORTH ELEVATION
SCALE: 1/8"=1'

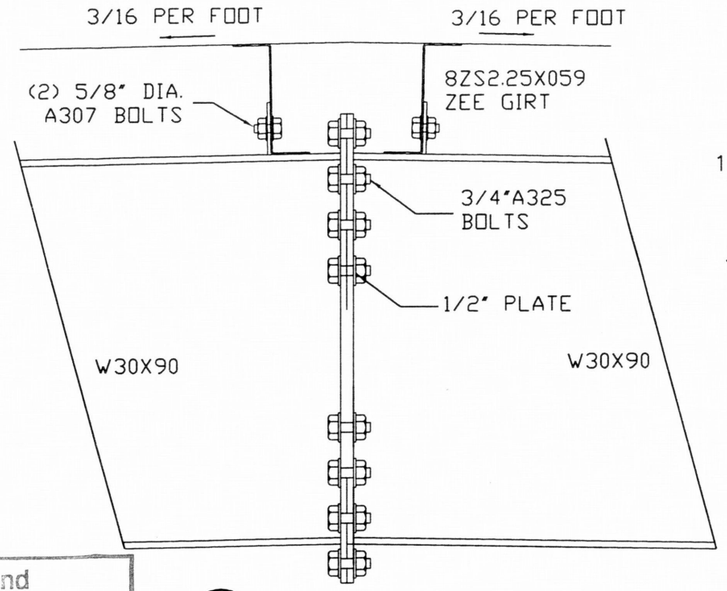

SE/S2 BEAM SPLICE ELEVATION
SCALE: 1"=1'

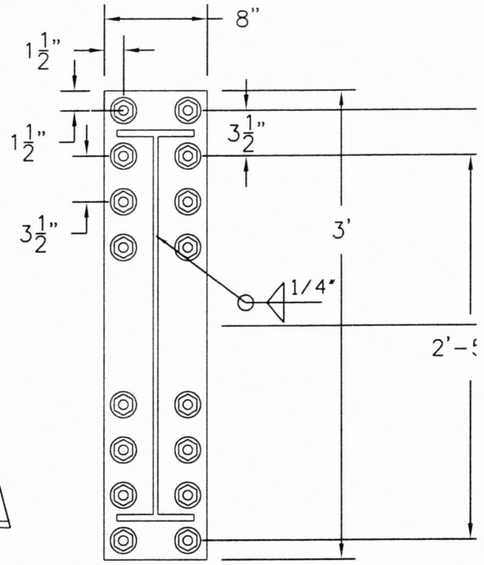

SS/S2 BEAM SPLICE SECTION
SCALE: 1"=1'

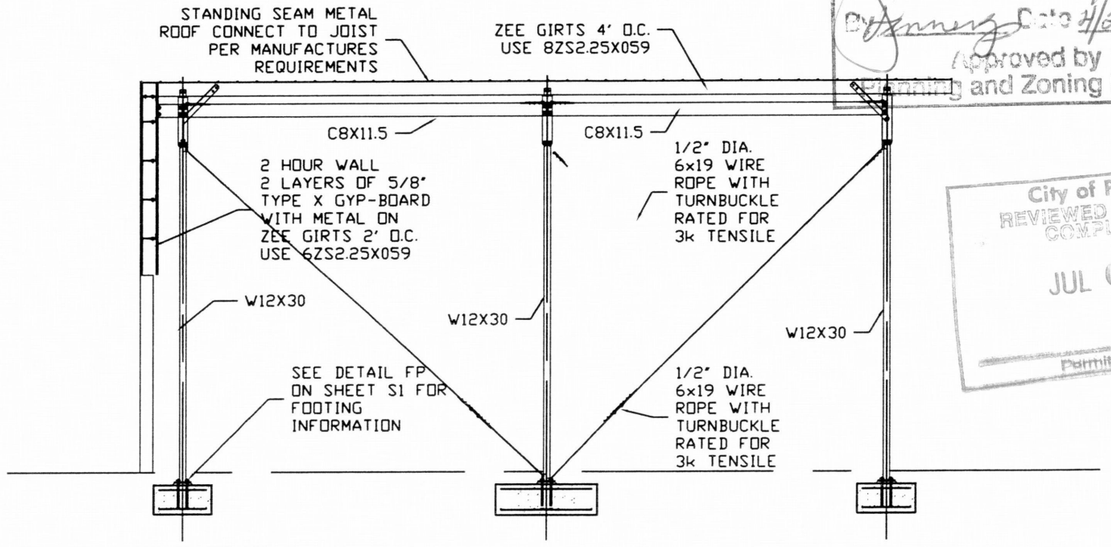

SE/S2 SOUTH ELEVATION
SCALE: 1/8"=1'

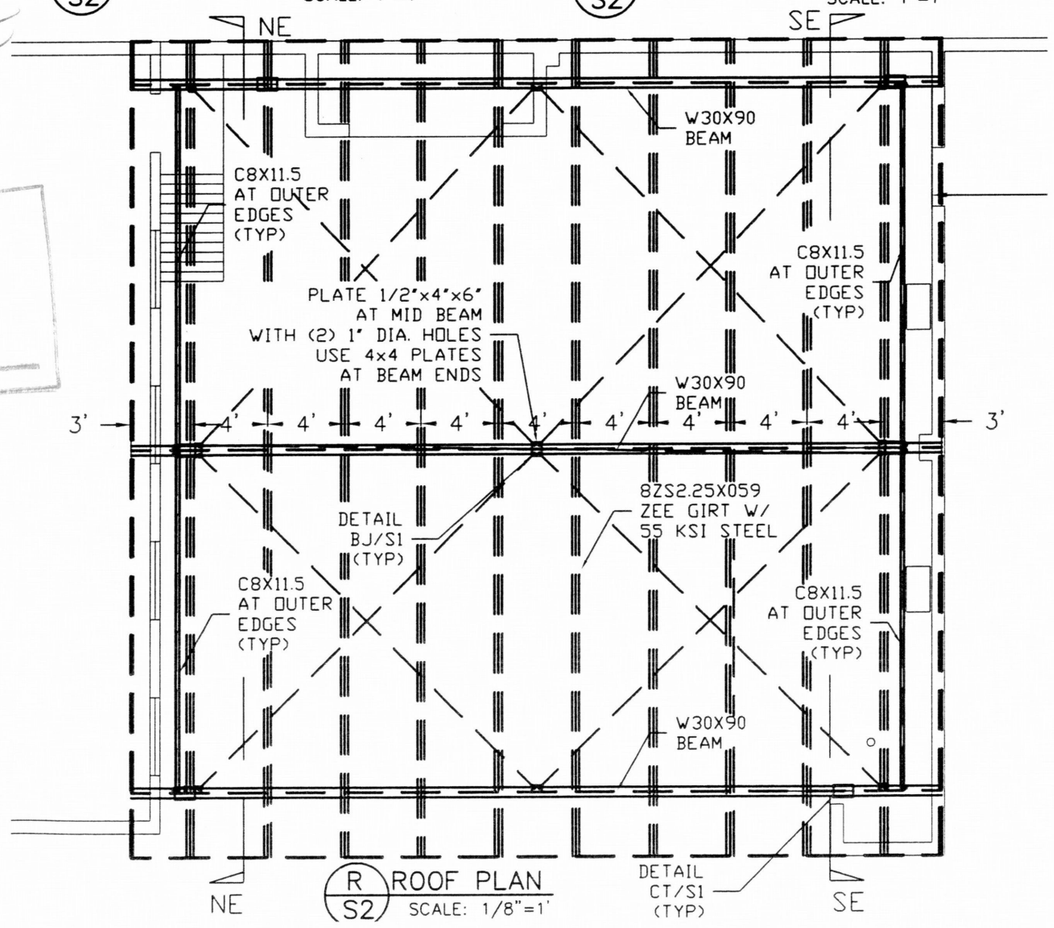

R/S2 ROOF PLAN
SCALE: 1/8"=1'

City of Portland
Bureau of Development Services
6/19/2012
By Sanners Date 6/24/2012
Approved by Building and Zoning Review

City of Portland
REVIEWED FOR CODE COMPLIANCE
JUL 09 2012
Permit Number

EXPIRES 6/30/2012
REGISTERED PROFESSIONAL ENGINEER 16478 OREGON MAR. 16, 1993 DEAN P. ZAROSINSKI

RECEIVED
JUN 13 2012
BDS
DOCUMENT SERVICES

SUBTITLE: ROOF CANOPY FRAMING PLAN AND ELEVATIONS

TITLE: ROOF CANOPY FOR GENERAL EQUIPMENT
6767 NE COLUMBIA BLVD.
PORTLAND OREGON

ZARO CAD FILE:H0065-1.DWG

Zarosinski Engineering & Design
1400 NW 155th Circle
Vancouver, WA. 98685
PHONE: (360) 513-2746
EMAIL: dzaro@zaroeng.com

DRAWN BY: DPZ
DATE: 6-13-12
DPZ

JOB NO: H0267-1
DWG NO: H0267-1
SCALE: NOTED
SHEET: S2

GENERAL NOTES:

GENERAL CONDITIONS:
1. ALL WORK SHALL COMPLY WITH THE 2010 OREGON STRUCTURAL SPECIALTY CODE BASED ON THE 2010 ISSUE OF THE INTERNATIONAL BUILDING CODE, THE OREGON FIRE CODE BASED ON THE 2010 IFC, THE OREGON MECHANICAL SPECIALTY CODE BASED ON THE 2010 IMC, THE OREGON PLUMBING SPECIALTY CODE BASED ON THE 2010 UPC AND ANY APPLICABLE STATE, COUNTY OR LOCAL REGULATIONS.
2. THE CONTRACTOR IS RESPONSIBLE TO CHECK THE PLANS AND SITE CONDITIONS AND TO NOTIFY THE DESIGNER OF ANY ERRORS OR OMISSIONS PRIOR TO THE START OF CONSTRUCTION.

SITE WORK:
1. REMOVE EXISTING CONCRETE, EXCAVATE FOR FOOTING HAULING OFF SOIL FOR DISPOSAL PERCITY OF PORTLAND EROSION CONTROL GUIDELINES
2. FOOTINGS ARE TO BEAR ON UNDISTURBED LEVEL SOIL. IN CASE WHERE EXISTING FOUNDATION/FOOTINGS OCCUR, CONTRACTOR IS RESPONSIBLE TO UPDATE / COMPLY BASED ON CURRENT CODE REQUIREMENTS WHEN PROPOSED WORK HAS ANY AFFECT ON THE STRUCTURAL INTEGRITY OF THE EXISTING FOUNDATION/FOOTINGS.
3. ANY FILL UNDER GRADE SUPPORTED CONCRETE SLABS TO BE 4" (MIN.) GRAVEL COMPACTED TO 95%.
4. CONCRETE SLABS TO BE 5\", 3,000 P.S.I. AT 28 DAYS WITH CONTROL JOINTS AT 20'-0" o.c. (MAX.) EACH WAY. PROVIDE [" TOOLED JOINTS AT 5'-0" o.c. IN CONCRETE SIDEWALKS.
5. FINISH GRADES ARE TO REMAIN AT LEAST 2" BELOW SLAB ON GRADE.

FOUNDATIONS:
1. ALL CONCRETE TO HAVE A MIN. 28 DAY COMPRESSIVE STRENGTH OF 3000 P.S.I. W/ A MAX 4" SLUMP.
2. ALL REINFORCING STEEL TO BE A-615 GRADE 60. WELDED WIRE MESH TO BE A-185.
3. PLACE ALL REINFORCING AS PER A.C.E. CODES AND STANDARDS.
4. LAP ALL CONTINUOUS BARS 30 x DIA. (MIN.)

METAL BUILDING DESIGNS SHALL CONFORM TO 2010 OSSC AND BE APPROVED BY PROJECT ENGINEER AND INFORMATION PROVIDED TO THE CITY. PER 2011 OSSC CHAPTER NINE SECTION F 907.2.2 GROUP F-1,THE OCCUPANT LOAD IS LOWER THAN THE THRESHOLD REQUIRING FIRE PROTECTION SYSTEMS. BUILDING ACCESSIBILITY SHALL COMPLY WITH SECTION 11 OF THE 2011 OSSC.

EXPIRES 6/30/2012

REGISTERED PROFESSIONAL ENGINEER 16478 OREGON MAR. 16, 1993 DEAN P. ZAROSINSKI

STRUCTURAL DESIGN CRITERIA

STRUCTURAL DESIGN STATEMENT
PREPARED BY DEAN P. ZAROSINSKI PE, REGISTERED DESIGN PROFESSIONAL IN RESPONSIBLE CHARGE AND BASED ON OSSC 2010

SEISMIC SITE CLASSIFICATION D (STIFF SOIL PROFILE) SEISMIC IMPORTANCE FACTOR = II
DESIGN CATEGORY D, Ss=0 .9653g 0.2 SEC. RESPONSE S1=0.4012 1.02 SEC. RESPONSE Fa= 1.0, FV=1.5
Sms=1.075g AND Sm1=0.641g
SPECTRAL RESPONSE COEFFICIENTS Sds=0.717, Sd1=0.428 Cs=0.258xW, R=3.5 FOR FRAME AND R=3.25 FOR BRACING, SYSTEM OVERSTRENGTH FACTOR Ω = 3.00, Cd=3.0

ALLOWABLE SOILS BEARING = 2,000 PSF,
WIND LOADS, BASIC WIND SPEED 105 MPH, WIND IMPORTANCE FACTOR=1.0, OCCUPANCY FACTOR 11, OPEN STRUCTURE. ROOF LIVE LOADS = 10 PSF, SNOW LOADS, GROUND SNOW LOAD = 25 PSF FLAT ROOF LOAD=20.0 PSF, SNOW EXPOSURE FACTOR 1 FULLY EXPOSED (0.90)

MATERIALS. CONCRETE 3000 PSI, ANCHOR BOLTS TO BE GALV. A306 STEEL, MAIN FRAMING STEEL TO BE A36, ZEE GIRTS TO BE 55 KSI. BOLTS TO BE A325

STRUCTURAL STEEL COMPONENTS SHALL BE INSPECTED PER TABLE 1704.4. INSPECTION OF HIGH STRENGTH BOLTING SHALL CONFORM TO 2.b, AND BE PERIODIC. DECK WELDING SHALL BE PERIODIC. OTHER WELDING INSPECTION SHALL CONFORM TO TABLE 1704.4, SECTION 5. CONNECTION INSPECTION SHALL BE COMPLETED AND APPROVED BY THE PROJECT ENGINEER AND THE CITY INSPECTOR PRIOR TO THE PLACEMENT OF ANY SUSPENDED CONCRETE. A COPY OF THIS APPROVAL SHALL KEPT ONSITE FOR REVIEW BY THE CITY INSPECTOR.

CODE REQUIRED SPECIAL INSPECTION

CONCRETE: REINFORCING, STRUCTURAL EMBEDS, ANCHOR BOLTS

STEEL: PERIODIC INSPECTION OF FILLET WELDS
LARGER WELDS REQUIRE CONTINIUOS INSPECTION. BOLT UP CONNECTIONS OF STEEL MEMBERS

STRUCTURAL OBSERVATION BY ENGINEER

PRIOR TO PLACING CONCRETE IN FOUNDATIONS, AT COMPLETION OF STRUCTURAL STEEL CONNECTIONS AND AT COMPLETION OF LATERAL SYSTEM NAILING FOR WOOD FRAMED PORTION

City of Portland
REVIEWED FOR CODE COMPLIANCE
JUL 09 2012
Permit Number

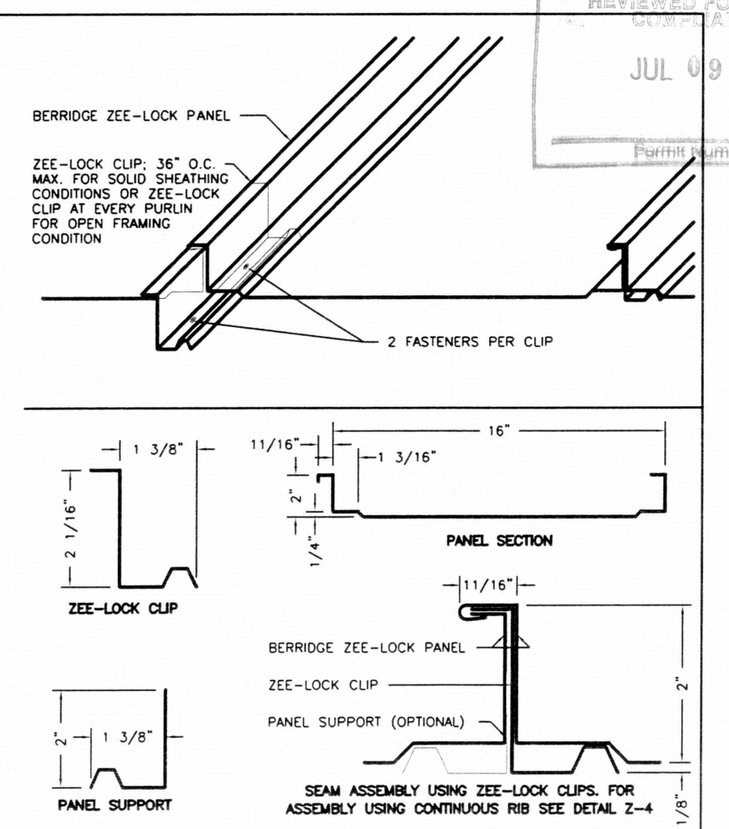

OVERVIEW
ZEE-LOCK CLIP
ZEE-LOCK PANEL

DATE: 04-01-97
PAGE\FILE
Z-5

RECEIVED
JUN 13 2012
BDS
DOCUMENT SERVICES

SUBTITLE: ROOF CANOPY FRAMING PLAN AND ELEVATIONS

TITLE: ROOF CANOPY FOR GENERAL EQUIPMENT
6767 NE COLUMBIA BLVD.
PORTLAND OREGON

ZARO CAD FILE:H0065-1.DWG

Zarosinski Engineering & Design
1400 NW 155th Circle
Vancouver, WA. 98685
PHONE: (360) 513-2746
EMAIL: dzaro@zaroeng.com

DRAWN BY: DPZ
DATE: DPZ
6-13-12

JOB NO: H0267-1
DWG NO: H0267-1
SCALE: NOTED
SHEET: S3

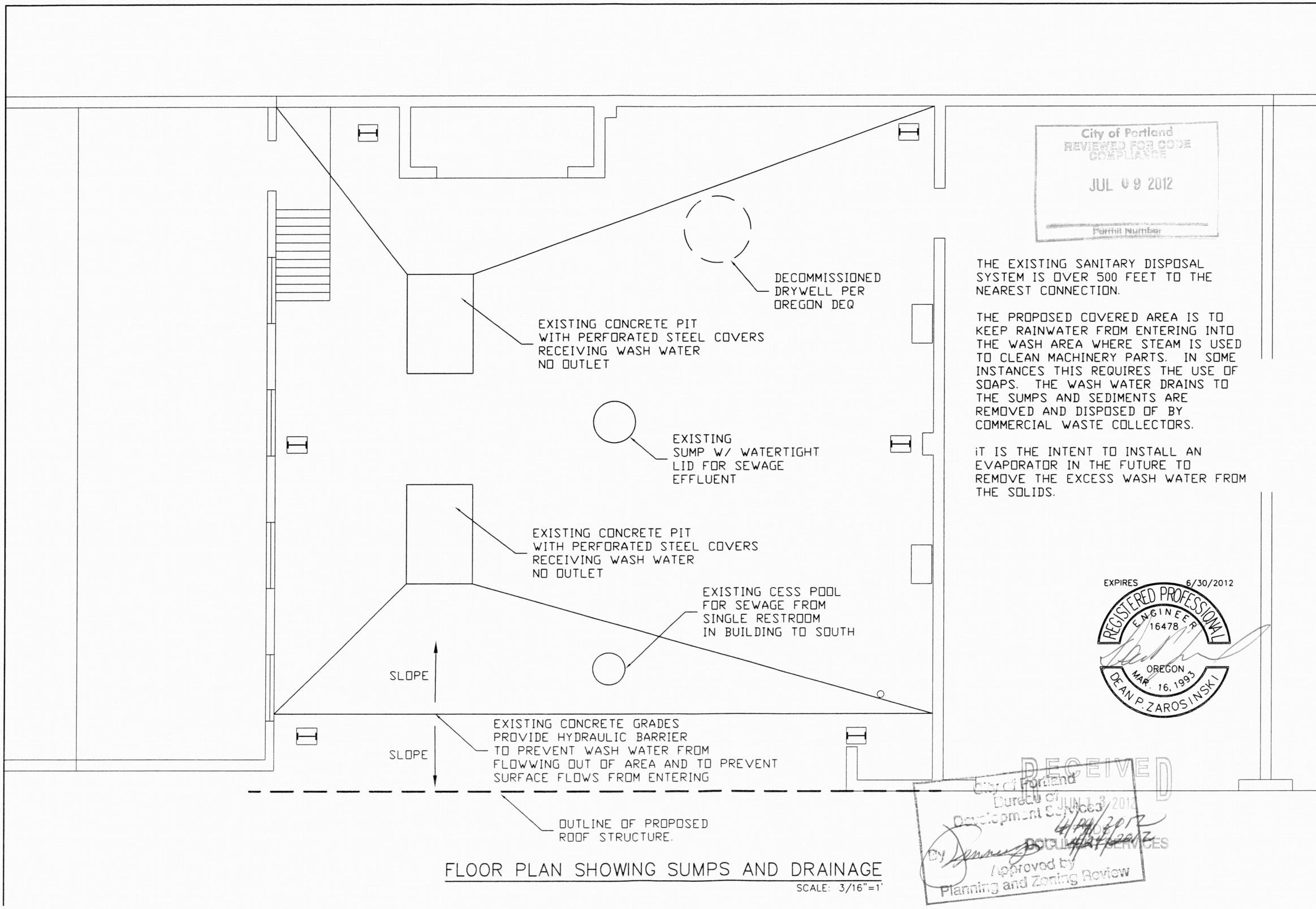

FLOOR PLAN SHOWING SUMPS AND DRAINAGE

SCALE: 3/16"=1'

THE EXISTING SANITARY DISPOSAL SYSTEM IS OVER 500 FEET TO THE NEAREST CONNECTION.

THE PROPOSED COVERED AREA IS TO KEEP RAINWATER FROM ENTERING INTO THE WASH AREA WHERE STEAM IS USED TO CLEAN MACHINERY PARTS. IN SOME INSTANCES THIS REQUIRES THE USE OF SOAPS. THE WASH WATER DRAINS TO THE SUMPS AND SEDIMENTS ARE REMOVED AND DISPOSED OF BY COMMERCIAL WASTE COLLECTORS.

iT IS THE INTENT TO INSTALL AN EVAPORATOR IN THE FUTURE TO REMOVE THE EXCESS WASH WATER FROM THE SOLIDS.

City of Portland
REVIEWED FOR CODE COMPLIANCE
JUL 09 2012
Permit Number

EXPIRES 6/30/2012
REGISTERED PROFESSIONAL ENGINEER 16478
OREGON MAR. 16, 1993
DEAN P. ZAROSINSKI

RECEIVED
City of Portland
Bureau of Development Services
JUN 13 2012
4/24/2012
DOCUMENT SERVICES
By
Approved by
Planning and Zoning Review

SUBTITLE: FLOOR PLAN SHOWING SUMPS AND GRADING

TITLE: ROOF CANOPY FOR GENERAL EQUIPMENT
6767 NE COLUMBIA BLVD.
PORTLAND OREGON

ZARO CAD FILE:H0065-1.DWG

Zarosinski Engineering & Design
1400 NW 155th Circle
Vancouver, WA. 98685
PHONE: (360) 513-2746
EMAIL: dzaro@zaroeng.com

DRAWN BY: DPZ
DATE: DPZ
6-13-12

JOB NO: H0267-1
DWG NO: H0267-1
SCALE: NOTED
SHEET: BES1