CITY OF

PORTLAND, OREGON

BUREAU OF DEVELOPMENT SERVICES
1900 SW 4th Ave., Suite 5000
Portland, OR 97201

MULTNOMAH COUNTY

FACILITY PERMIT

12-139219-000-00-FA

Site Address: **2801 N GANTENBEIN AVE** **Issued: 6/12/12**

MW-NEW:FUEL TANK 3177526:Emanual Hos:Emanuel

PROJECT INFORMATION		Occ. Group	Const. Type
Mechanical	**Alteration**		

Project Description: F16/ BOILER FUEL SYSTEM UPGRADE, NEW 33' X 13' PAD WITH NEW 10,000 GAL ABOVE GROUND FUEL TANK, VEHICLE BARRIERS, AND RELATED FUEL PIPING INTO THE HOSPITAL. SEE BUILDING PERMIT FOR NEW FOOTING, SLAB, AND SEISMIC ANCHORAGE FOR FUEL OIL TANK

APPLICANT	**Total Mechanical *John Downing***	Phone	(971) 563-7759
PROPERTY OWNER	**EMANUEL HOSPITAL**	Phone	(503) 415-5675
CONTRACTOR	**TOTAL MECHANICAL INC**	Phone	

Project Details

Building/Mechanical Inspector	ROCKD
Electrical Inspector	RISERJ
Fire Marshal	BOYLESG
Plumbing Inspector	COOKEW
SI-Anchors - Expansion	Yes
Zoning - Property (1)	IRd

Project Details

Code Edition (Year)	2010 OSSC
Energy Code Edition	2010 Oregon Energ
Folder Name	NEW
Project Reference Number	1500251465
SI-Concrete Construction	Yes

FOR INSPECTION CONTACT Rock,David at 503-823-1079. Please contact Bob Happel with the Fire Marshal's Office at 503-823-3934 to verify separate pemit requirements for tanks and process piping.

This permit expires if, at any time, 180 days pass without an approved inspection. If you are not able to obtain an inspection approval within 180 days, you may request a one-time only extension of 180 days by calling 503-823-5996.

BEFORE YOU DIG

ATTENTION: Oregon law requires you to follow rules adopted by the Oregon Utility Notification Center. Those rules are set forth in OAR 952-001-0010 through OAR 952-001-0090. You may obtain copies of the rules by calling the center. (Note: the telephone number for the Oregon Utility Notification Center is 1-800-332-2344).

CITY CONTACT

E-Mail:

Phone:

Fax: (503) 823-7425

INSPECTION REQUEST PHONE NUMBERS

TDD: (503) 823-6868

IVR Inspection Request Number:

Contact your inspector directly for inspection requests.

CITY OF PORTLAND, OREGON - BUREAU OF DEVELOPMENT SERVICES

1900 SW Fourth Avenue, Suite 5000 • Portland, Oregon 97201 • www.portlandonline.com/bds • Fax 503-823-7425

Facility Permit Plan Intake Form

FOR INTAKE, STAFF USE ONLY

Date Received 5/8/12

Building Registration # 99-124719-FC

Fixed Bid

Bin # F16

Building Permit #

Mechanical # 12-139219-FA

Plumbing Permit #

Electrical Permit #

Building/Mechanical Dave R

Electrical John

Plumbing

Fire Gary

Planning Kim

BES

PDOT

Structural Eric

Other 3344640

APPLICANT: Complete all sections below that apply to the project. Please print legibly.

Print Name John Downing Sign Name

Street Address 1498 SE Tech Center Place (Suite 180)

City Vancouver State WA Zip Code 98683

Day Phone (971) 563-7759 FAX (360) 896-3849 email johnd@totalmechanical.com

Plans / permits available for pick up at 1900 SW 4th Avenue, 2nd floor between 8:00 am to 5:00 pm

Contact Name for plan/permit pick up John Downing

Day Phone (971) 563-7759 email johnd@totalmechanical.com

Project Building Name / # Legacy Emanuel Hospital

Project Address or Location 2801 North Gantenbein Ave

Project Name and Description Boiler Fuel System Upgrades

Total Project Value $322,949 Project Reference #/Billing ID # Legacy Project #1500251465

Building Contractor Total Mechanical CCB # 30066

MechanicalContractor CCB #

Electrical Contractor CCB# License #

Plumbing Contractor CCB# License #

☒ **Building Permit**

No. of Stories

Const. Type

[Y] (N) Alarms Required

[Y] (N) Smoke Det. Req'd

[Y] (N) Sprinklers Req'd

(Y) [N] Struct. Eng / Calcs Submitted

☐ **Mechanical Permit**

Mechanical Valuation

Description

☐ **Electrical Permit**

Please provide a completed standard electrical permit application form. You may mail or deliver it to 1900 SW 4th Avenue, Portland, Oregon 97201 or FAX to 503-823-7425.

☐ **Plumbing Permit**

Number of Fixtures

Back Flow Devices

Water Service (# of Feet)

Medical Gas

Other

City of Portland REVIEWED FOR CODE COMPLIANCE JUN 12 2012 12-139219-FA Permit Number

FPP Structural Checksheet Response

Permit #: **12-139219-000-00-FA** **Date:** 5/21/12

Customer name and phone number: JOHN DOWNING (971) 563-7759

Note: *Please number each change in the '#' column. Use as many lines as necessary to describe your changes. Indicate which reviewer's checksheet you are responding to and the item your change addresses. If the item is not in response to a checksheet, write* **customer** *in the last column.*

#	Description of changes, revisions, additions, etc.	Checksheet and item #
1	SPECIAL INSPECTION SHEET COMPLETED AND ATTACHED.	1
2	TANK WEIGHT CALCULATIONS AND DESIGN REVISED TO INCLUDE WEIGHT OF FUEL.	2

(for office use only)

RECEIVED
MAY 22 2012
FACILITIES PERMITS

Facilities Checksheet Response

Permit #: **12-139219-000-00-FA** **Date:** 5/21/12

Customer name and phone number: JOHN DOWNING (971) 563-7759

Note: *Please number each change in the '#' column. Use as many lines as necessary to describe your changes. Indicate which reviewer's checksheet you are responding to and the item your change addresses. If the item is not in response to a checksheet, write* **customer** *in the last column.*

#	Description of changes, revisions, additions, etc.	Checksheet and item #
1	BOLLARDS ADDED TO PROVIDE VEHICLE PROTECTION. DRAWINGS AND CALC'S ATTACHED.	1
2	MECHANICAL & STRUCTURAL VALUATIONS SENT VIA EMAIL TO DAVID ROCK ON 5/11/2012.	2

(For office use only)

RECEIVED

MAY 22 2012

FACILITIES PERMITS

CITY OF PORTLAND, OREGON – BUREAU OF DEVELOPMENT SERVICES

1900 SW Fourth Avenue, Suite 5000 • Portland, Oregon 97201 • www.portlandonline.com/bds

MULTNOMAH COUNTY

Structural Special Inspection and Observation Program Checksheet

The registered design professional in responsible charge shall prepare and submit a special inspection and structural observation program in accordance with IBC Sections 1704.1.1, 1705.2, and 106.3.4.1, and confirm that the special inspection and structural observations noted below are indicated on the drawings.

~ Please Note that separate Soils and Life Safety Inspection Checksheets may also be required ~

Instructions – Parts D and E of this Checksheet must be fully completed by the Owner (or Architect or Engineer acting as the owner's agent) in order to obtain your permit.
When complete, return this form to BDS Permitting Services. You may return it in person at 1900 SW 4th Ave, by fax to (503) 823-7425, or by email to fppspecialinspectionschecksheets@portlandoregon.gov

Application #	12-139219-000-00-FA	**Date:**	May 14, 2012
Project Name:	MW-NEW:FUEL TANK 3177526:Emanual Hos:Emanuel		
Site Address:	2801 N GANTENBEIN AVE		
Architect of Record (Firm)		**Phone #**	
Engineer of Record (Firm)	Madden Baughman	**Phone #**	503-236-7611

The following special inspections and structural observations shall be performed according to the State Building Code and City of Portland Special Inspection Program Administrative Rules unless a program of inspections is submitted by the Engineer of Record and approved by Bureau of Development Services.

A. REQUIRED SPECIAL INSPECTIONS FOR ALL BUILDING TYPES

☐ Steel Construction	☒ Concrete Construction	☐ Anchors – Adhesive	☐ Wood Construction
☐ Curtainwall	☐ Prestressed Concrete	☐ Anchors – Cast-in-place	☐ Masonry
☐ Structural Silicone Glazing	☐ Shotcrete	☒ Anchors – Expansion/Screw	☐ Cold Formed Steel
Special Cases:	☐	☐	☐

B. REQUIRED SPECIAL INSPECTIONS FOR CATEGORY III AND IV BUILDINGS (In addition to those noted above.)

☐ Seismic Force Resist. System	☐ Storage Racks	☐ Access Floors	☐ Suspended Ceilings
☒ Mechanical Components	☐ Electrical Components	☐ Cladding	☐ Veneer
☐ Nonbearing Walls	☐ Seismic Isolation System	☐	☐
Special Cases:	☐	☐	☐

RECEIVED
MAY 22 2012
FACILITIES PERMITS

C. STRUCTURAL OBSERVATION

☐ Required (The stages of construction at which structural observation is to occur shall be indicated on the drawings.)

D. APPROVED SPECIAL INSPECTOR OR INSPECTION AGENCY (To be completed by the applicant.)
Indicate the City approved special inspector or special inspection agency to perform the required special inspections noted in parts A. and B. above:

☐ ACS (503) 443-3799	☐ FEI Testing (541) 757-4698	☐ Northwest Geotech (503) 682-1880
☒ Carlson Testing (503) 684-3460	☐ Kleinfelder, Inc. (503) 644-9447	☐ PSI (503) 289-1778
☐ Clair Company (541) 758-1302	☐ Materials Testing/Insp (208) 376-4748	☐ Other:
☐ Columbia West Eng (360) 823-2900	☐ Mayes Testing, Inc. (503) 281-7515	

E. To be completed by the applicant.
By completing Part E the project owner (or the Architect or Engineer acting as the Owner's Agent) hereby agrees to employ the special inspector or inspection agency and/or engineer of record for the above noted special inspections and/or structural observations. (***Contractors are NOT authorized to agree for the Owner.***)

The project owner shall provide a copy of this checksheet to the special inspections agency and engineer of record.

Print Name J. Arnold Date 5·18·12
(Project Owner or the Architect or Engineer acting as the Owner's Agent)

Firm MADDEN & BAUGHMAN Phone 503-236-7611

APPLICANT – COMPLETE PARTS D & E

MADDEN&BAUGHMAN
ENGINEERING, INC

May 18, 2012

Mr. John Downing
Total Mechanical Inc.
2410 SE 10th Avenue
Portland, Oregon

RE: Legacy Emanuel Fuel Tank – Plan Review Response
North Gantenbein, 12-139219-000-00-FA
Portland, Oregon

John,

Attached please find revised calculations and drawings for the weight of the fuel in the fuel tank as noted in the plan review response for permit #12-139219-000-00-FA, and for bollards as required by the site review plan.

If you have any questions please call me.

Sincerely,

Jerome A Madden III

Jerome Madden, P.E., S.E., Principal
Madden & Baughman Engineering, Inc.

REGISTERED PROFESSIONAL ENGINEER
19386
Jerome A Madden III
OREGON
JUL. 22, 1997
JEROME A. MADDEN
EXPIRES 12-31-12

321 SW 4th Avenue, Suite 500 Portland, OR 97204 / tel 503.236.7611 / fax 503.236.9411 / www.maddenbaughman.com

MADDEN&BAUGHMAN
ENGINEERING, INC.
321 SW 4th Avenue, Suite 500, Portland, OR 97204
tel 503.236.7611 / fax 503.236.9411
www.maddenbaughman.com

Project	LEH FUEL TANK	By JM.	Sheet No.
Location		Date 5.18.12	1-REV.
Client		Revised	Job No.
	PLAN REVIEW	Date	

WEIGHT:

GALLON OF FUEL = 7 LB

WT FUEL = 10,000 GAL × $\frac{7 \text{ LB}}{\text{GAL}}$

WT FUEL = 70,000

WT TANK = 28,255

98,255 LBS.

$$F_p = .4 I a_p S_{DS} \frac{W}{R_p}\left(1 + 2\frac{z}{h}\right)$$

$$F_p = .4(1.5)(2.5)(.75)\frac{W}{2.5}\left(1 + 2(0)\right) = .45 W$$

$F_{p\,ASD} = .32 W.$

= 31.5 kip. (@ CONNECTION)

= 12.6 kip (BASE SHEAR)

$M_o/\tau = 31.5(4) = 126$ KFT

$T = \frac{126(12)}{77} = 19.6$ kip.

$.9\frac{P_{DL}}{2} = \frac{0.9(98.25)}{2} = 44$ kip.

— NO NET UPLIFT

$V_{EA.\ ANCHOR} = \frac{31.5}{8} = 4.0$ kip / EA.

SEE HILTI OUTPUT

MADDEN&BAUGHMAN
ENGINEERING, INC.
321 SW 4th Avenue, Suite 500, Portland, OR 97204
tel 503.236.7611 / fax 503.236.9411
www.maddenbaughman.com

Project	LOH FUEL TANK	By	JM	Sheet No.
Location		Date	5.18.12	2-REV
Client		Revised		Job No.
		Date		

WT @ FOOTING:

ASSUME: 1500 psf

PER CORNER = 98.25 / 4 = 24 kip.

$A_{REQ'D} = \frac{24\ k}{1.5} = 16\ FT^2.$

AT 4'-0" LONG BASE

WREQD = 4 FT. ← USE UNIFORM THICKNESS AT STEEL BASE ACROSS FOOTING WIDTH.

MADDEN&BAUGHMAN
ENGINEERING, INC.
321 SW 4th Avenue, Suite 500, Portland, OR 97204
tel 503.236.7611 / fax 503.236.9411
www.maddenbaughman.com

Project	LEH FUEL TANK	By	JM	Sheet No.
Location		Date	5.18.12	3-REV
Client		Revised		Job No.
		Date		

BOLLARD:

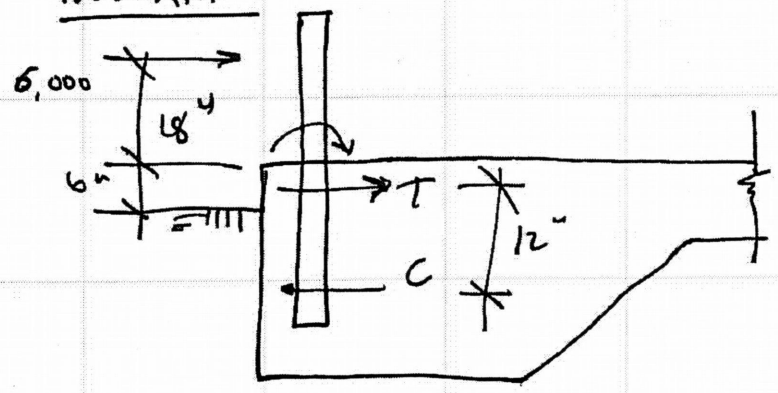

$M = 9$ kft. (ASD)

$M_{ULT} = 9(1.6)$
$= 14.4$ kft.

$T_{ULT} = 14.4$ kip.

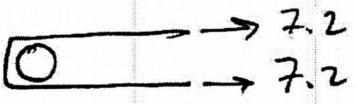

#4 HAIRPIN: $\phi T_N = .2(60)(.85) = 10.2$

$\phi T_N > 7.2$ kip
10.2

USE (3) #4 HAIRPINS.

CHECK PIPE: $S_{xx} = 5.5$.
5" DIA x 1/4"

$f = \frac{9(12)}{5.5} = 19.6$ ksi.

DOESN'T INCLUDE CONCRETE FILLED COMPONENT, O.K.

MADDEN&BAUGHMAN
ENGINEERING, INC.
321 SW 4th Avenue, Suite 500, Portland, OR 97204
tel 503.236.7611 / fax 503.236.9411
www.maddenbaughman.com

Project	LEGACY FUEL TANK	By JM.	Sheet No. 1/S7
Location	LEGACY EMANUEL FACILITIES	Date 5-18-12	Job No.
Client	TOTAL MECHANICAL	Revised	
		Date	

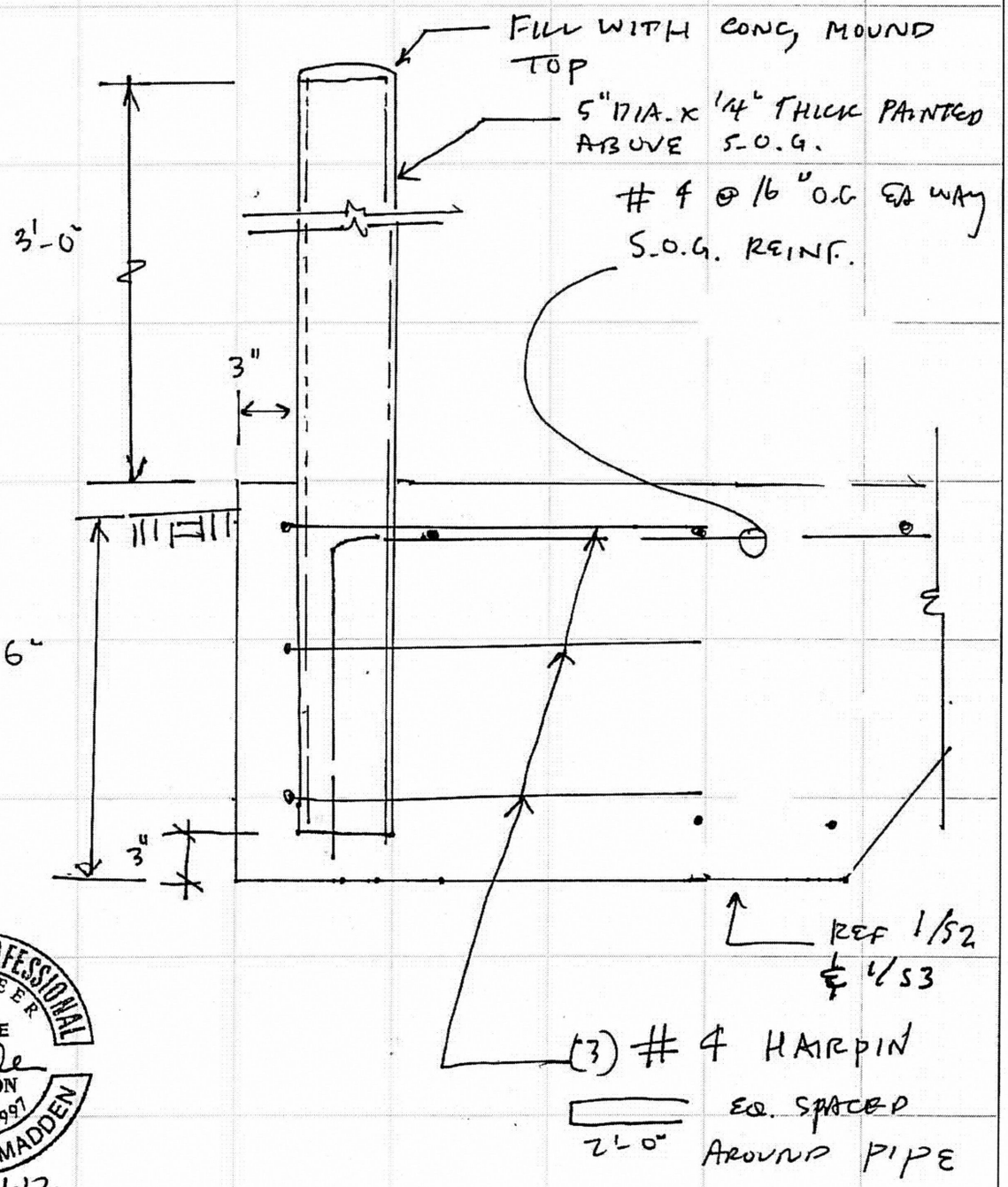

REGISTERED PROFESSIONAL ENGINEER
19386PE
OREGON
July 22, 1997
JEROME A. MADDEN
Exp 12-31-12

1/S7 TYP. BOLLARD.

MADDEN&BAUGHMAN
ENGINEERING, INC.
321 SW 4th Avenue, Suite 500
Portland, OR 97204
tel 503.236.7611 / fax 503.236.9411
info@maddenbaughman.com

REGISTERED PROFESSIONAL ENGINEER 19386 OREGON JUL. 22, 1997 JEROME A. MADDEN

Jerome A. Madden

EXPIRES 12-31-12

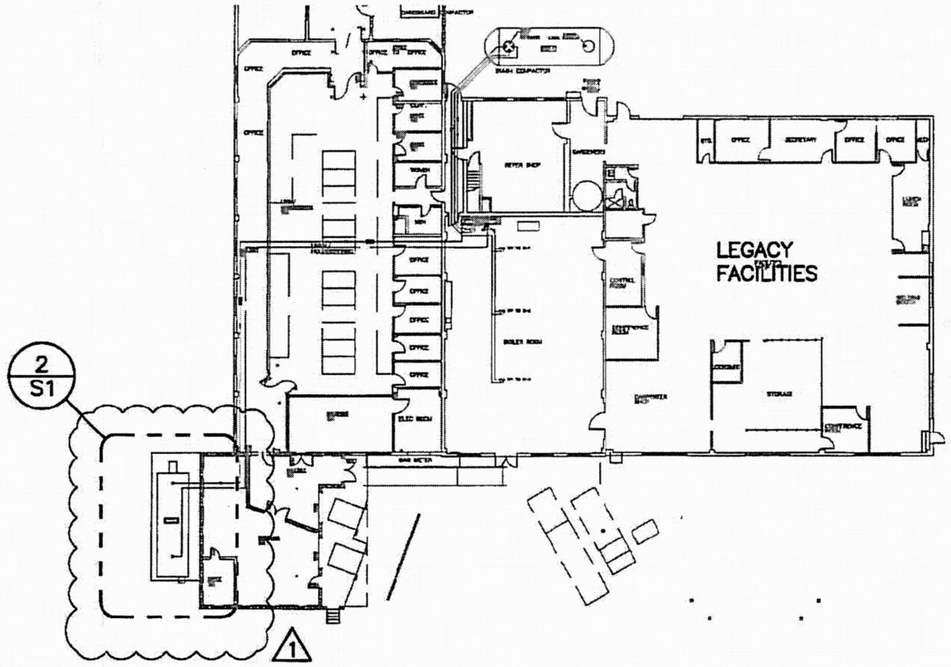

1 SITE PLAN
1" = 40'

RECEIVED
MAY 22 2012
FACILITIES PERMITS

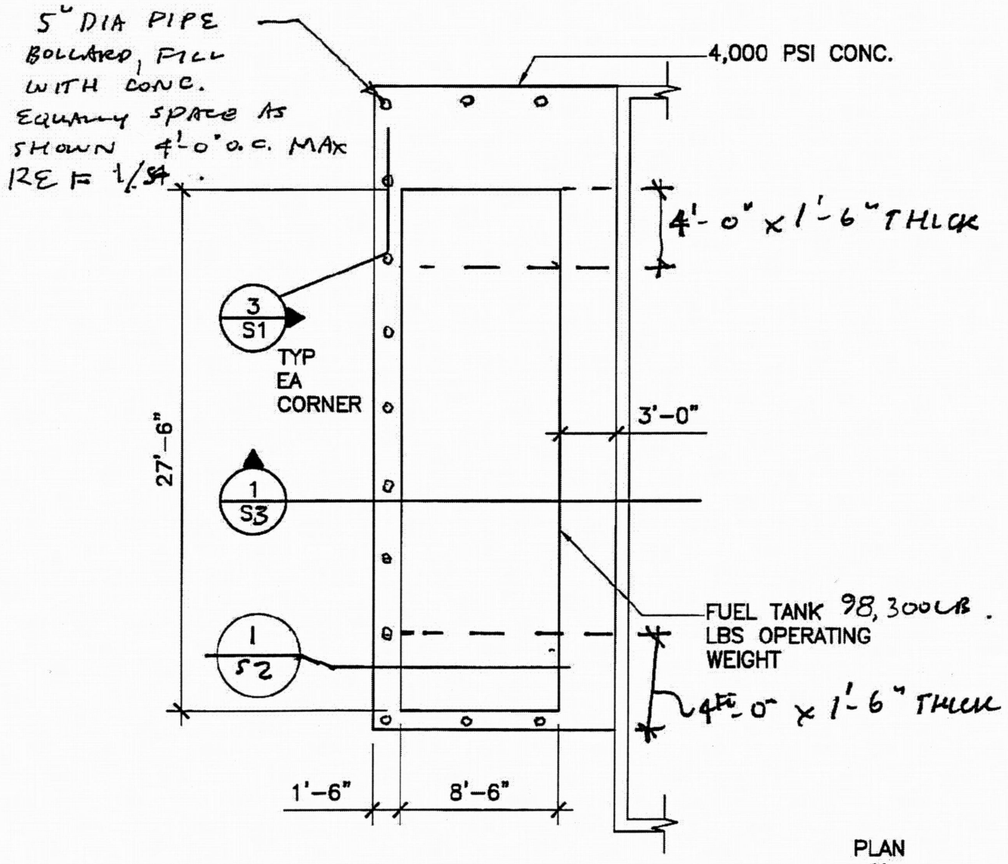

2 PLAN @ FUEL TANK
1/8" = 1'-0"

PLAN
N

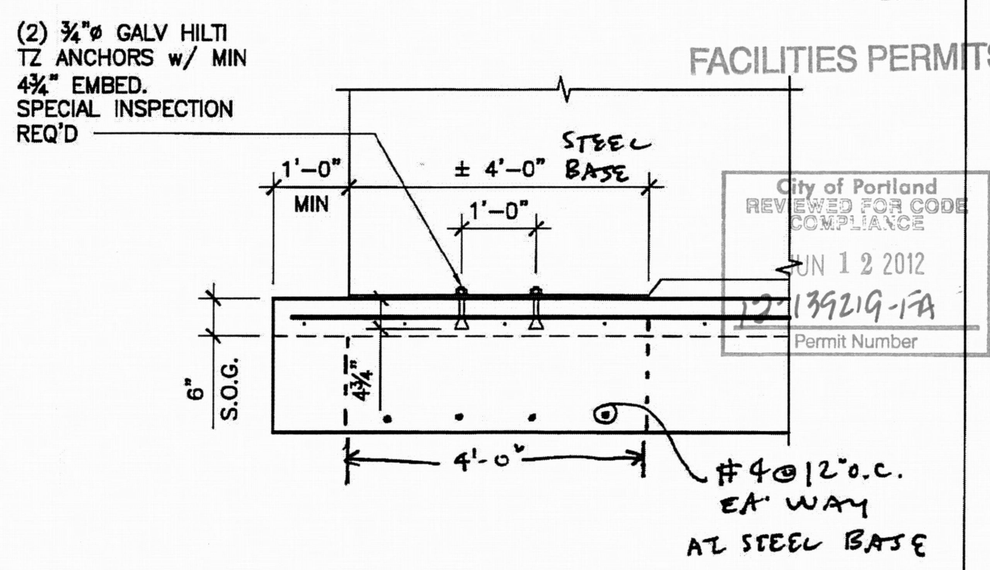

3 BASE DETAIL
1/2" = 1'-0"

City of Portland
REVIEWED FOR CODE COMPLIANCE
JUN 12 2012
12-139219-1A
Permit Number

BOILER FUEL SYSTEM UPGRADES
LEGACY EMANUEL HOSPITAL
PORTLAND, OREGON

1 5.18.2012

DATE
12-22-2011

PLAN

S1

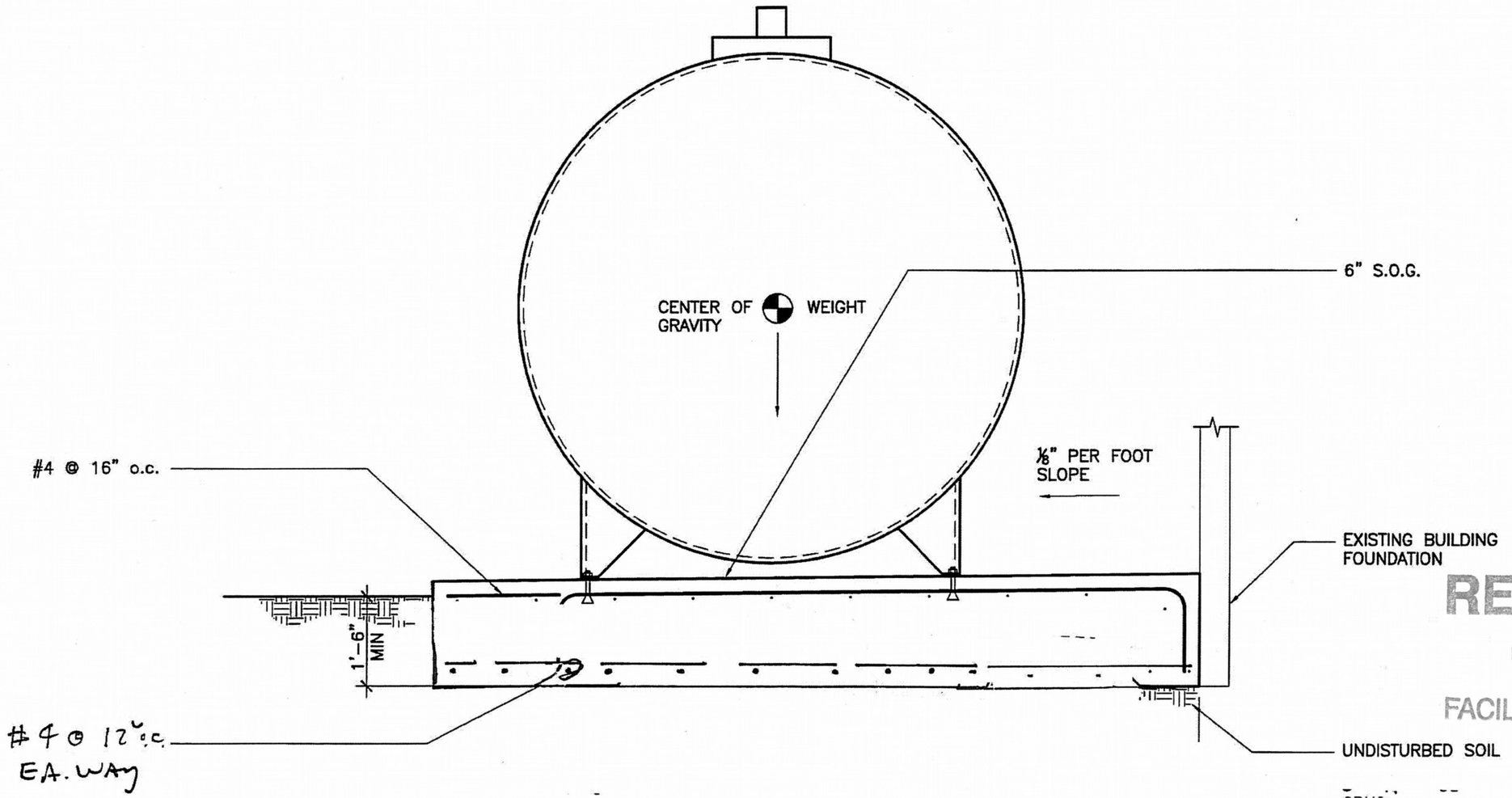

1 SECTION – AT STEEL BASE

1/2" = 1'-0"

MADDEN&BAUGHMAN
ENGINEERING, INC.
321 SW 4th Avenue, Suite 500
Portland, OR 97204
tel 503.236.7611 / fax 503.236.9411
info@maddenbaughman.com

REGISTERED PROFESSIONAL ENGINEER 19386 OREGON JUL. 22, 1997 JEROME A. MADDEN

EXPIRES 12-31-12

BOILER FUEL SYSTEM UPGRADES
LEGACY EMANUEL HOSPITAL
PORTLAND, OREGON

RECEIVED
MAY 22 2012
FACILITIES PERMITS

DATE
12-22-2011

PLAN

S2

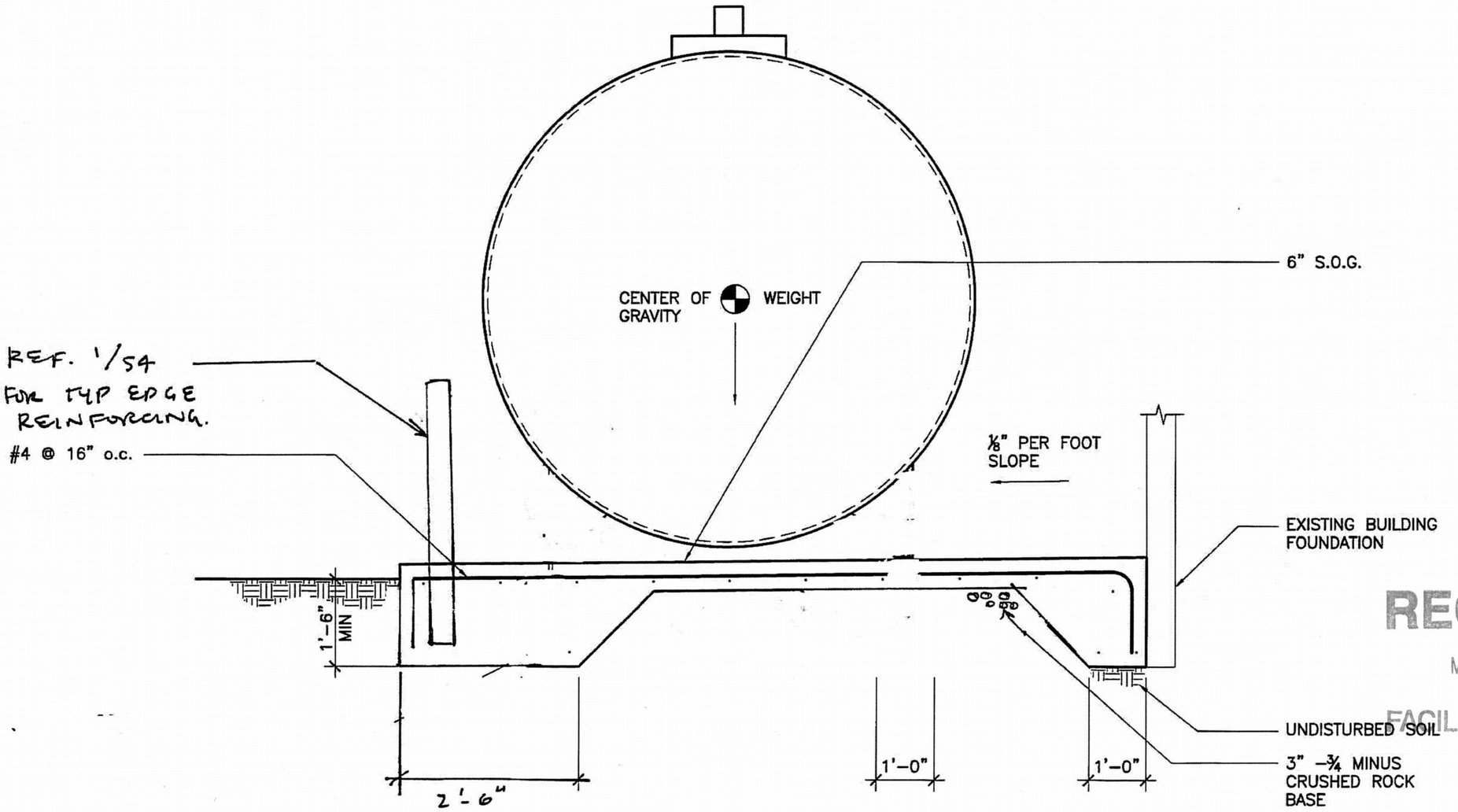

1 SECTION
1/2" = 1'-0"

MADDEN&BAUGHMAN
ENGINEERING, INC.
321 SW 4th Avenue, Suite 500
Portland, OR 97204
tel 503.236.7611 / fax 503.236.9411
info@maddenbaughman.com

REGISTERED PROFESSIONAL ENGINEER 19386
OREGON
JUL. 22, 1997
JEROME A. MADDEN

EXPIRES 12-31-12

BOILER FUEL
SYSTEM UPGRADES
LEGACY EMANUEL HOSPITAL
PORTLAND, OREGON

RECEIVED
MAY 22 2012
FACILITIES PERMITS

DATE
12-22-2011

PLAN

S3

2

TOTAL MECHANICAL, INC.
Mechanical Contractors & Engineers
P.O. Box 15099 - Portland, Oregon 97293
(503) 239-8121
CCB # 30066

Consultants

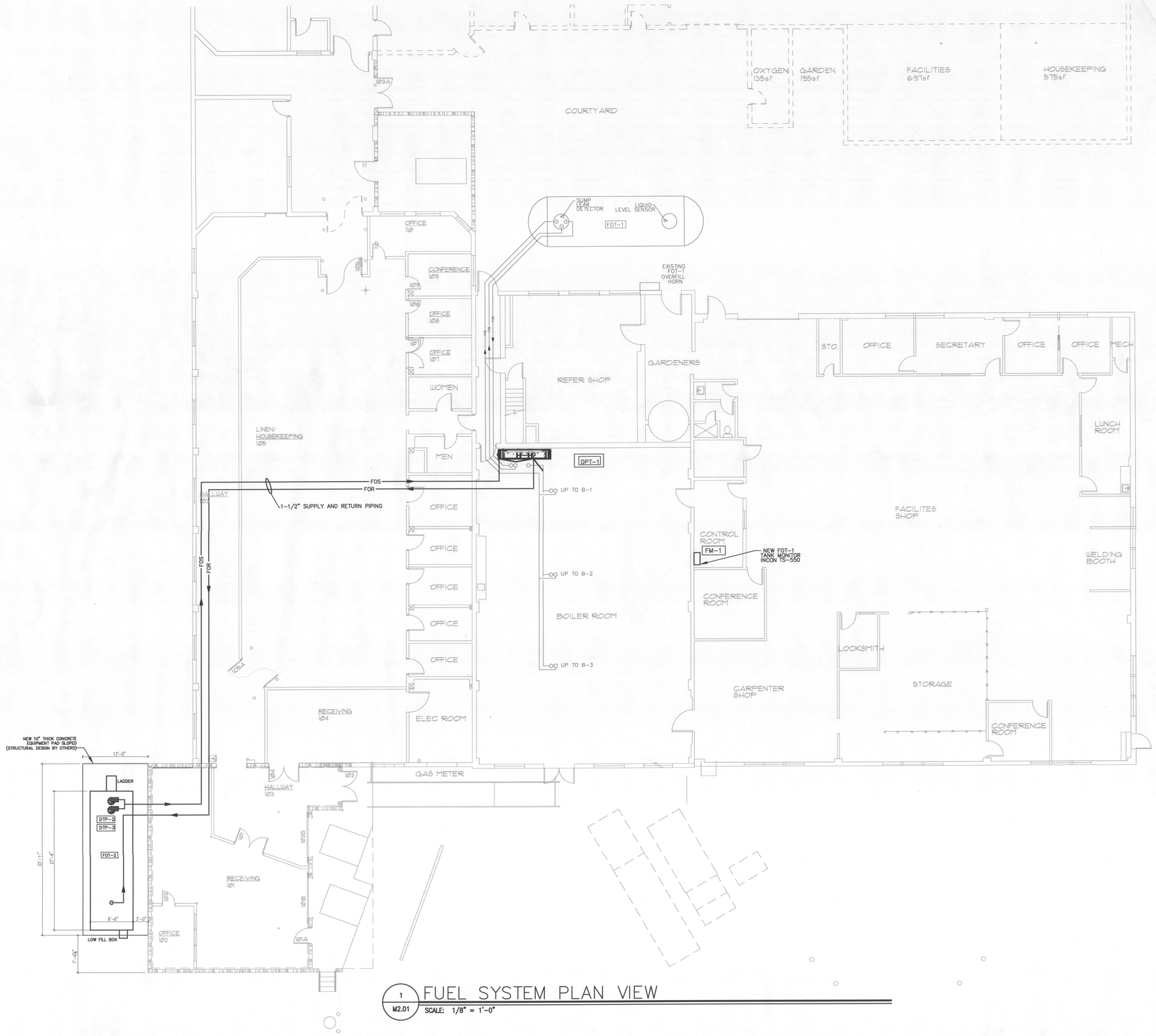

1 M2.01 FUEL SYSTEM PLAN VIEW
SCALE: 1/8" = 1'-0"

City of Portland
REVIEWED FOR CODE COMPLIANCE
JUN 12 2012
12-139219-FA
Permit Number

Revisions

LEGACY EMANUEL BOILER FUEL SYSTEM UPGRADES

Portland, Oregon

Drawing Title

PHYSICAL PLANT FLOOR PLAN

REVISED 2/29/12

REGISTERED PROFESSIONAL ENGINEER 17987 OREGON JULY 25, 1980 CHRISTOPHER C. KEARNS
EXPIRES 6-30-2013

Date:	OCTOBER 19, 2011
Job No:	11434
Drawn By:	TMI
Checked By:	CCK

Drawing No.

M2.01

CONSTRUCTION DOCUMENTS

12-139219-FA

F16

TOTAL MECHANICAL, INC.
Mechanical Contractors & Engineers
P.O. Box 15099 - Portland, Oregon 97293
(503) 239-8121
CCB # 30066

Consultants

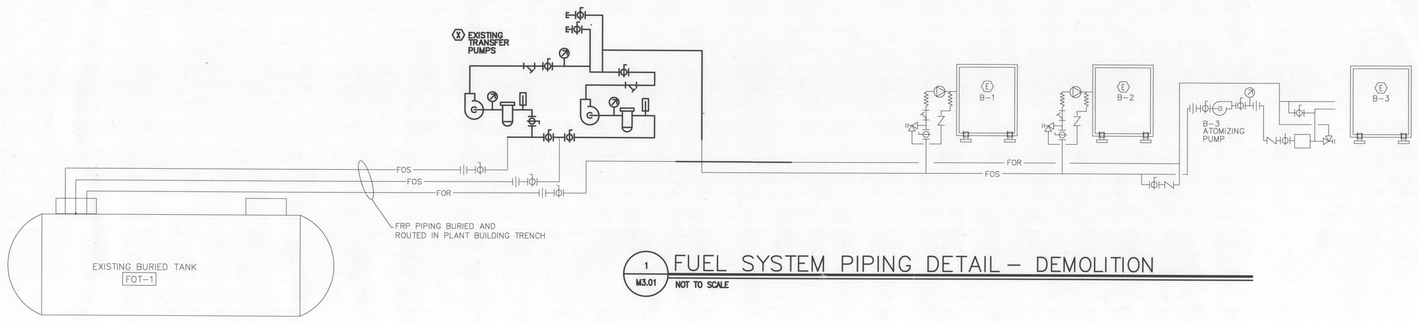

1 M3.01 FUEL SYSTEM PIPING DETAIL – DEMOLITION

NOT TO SCALE

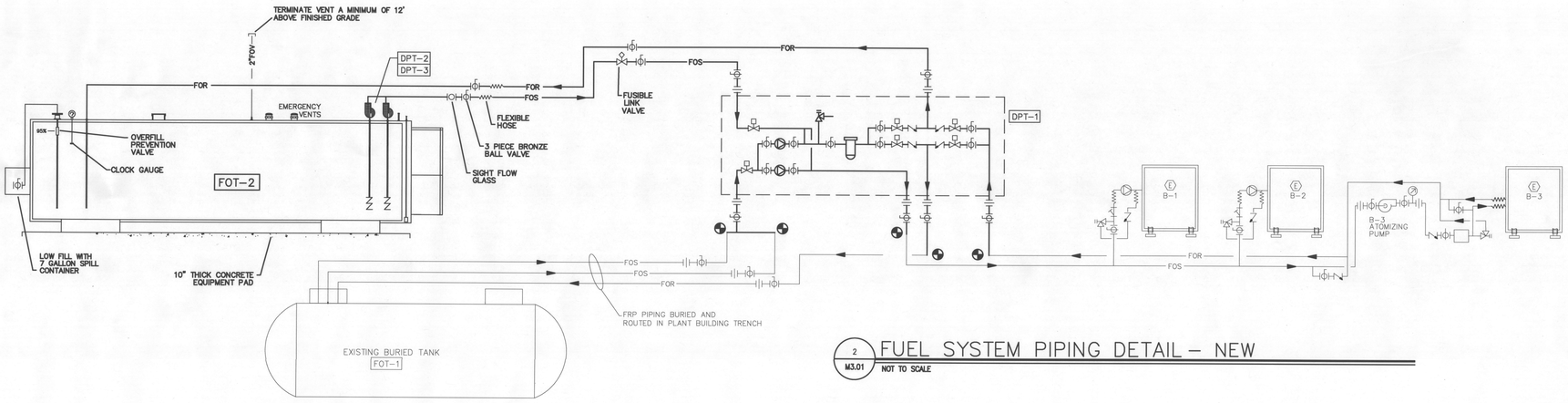

2 M3.01 FUEL SYSTEM PIPING DETAIL – NEW

NOT TO SCALE

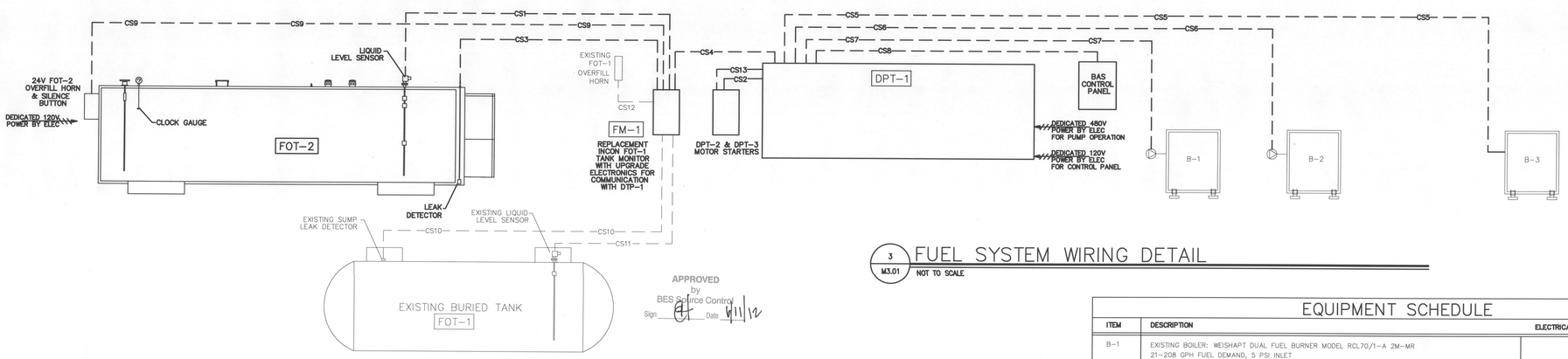

APPROVED
by
BES Source Control
Sign _____ Date 11/1/12

3 M3.01 FUEL SYSTEM WIRING DETAIL

NOT TO SCALE

LEGEND

COMPONENTS		DESIGNATIONS
1/4 TURN BALL VALVE	SIGHT FLOW GLASS	FOS – FUEL OIL SUPPLY FOF – FUEL OIL FILL FOR – FUEL OIL RETURN FOCS– FUEL OIL CLEANING SUPPLY FOCR– FUEL OIL CLEANING RETURN FOV – FUEL OIL VENT EFOV – EMERGENCY FUEL OIL VENT
CHECK VALVE	DOUBLE POPPET FOOT VALVE	
FUSIBLE LINK VALVE	CONNECT	
SOLENOID VALVE	FLEXIBLE CONNECTOR	

SIGNAL SUMMARY TABLE

TAG	SOURCE	DESTINATION	SIGNAL	TYPE
CS1	TANK LIQUID LEVEL SENSOR	INCON TANK MONITOR	FUEL POLISHER GENERAL ALARM	14G STRANDED PAIR
CS2	DTP–1	DTP–2 MOTOR STARTER	DTP–2 START/STOP	14G STRANDED PAIR
CS3	TANK INTERSTIAL LEAK DETECTOR	INCON TANK MONITOR	TANK INTERSTITIAL LEAK	14G STRANDED PAIR
CS4	INCON TANK MONITOR	DTP–1	TANK HI / LOW LEVEL ALARMS	ETHERNET
CS5	BOILER B–3	DTP–1	TANK LEVEL	14G STRANDED PAIR
CS6	BOILER B–2	DTP–1	LEAK IN TRANSITION SUMP	14G STRANDED PAIR
CS7	BOILER B–1	DTP–1	LEAK IN TRANSITION SUMP	14G STRANDED PAIR
CS8	MASTER CONTROLLER DPT–1	BAS CONTROL PANEL	FUEL SYSTEM TO DDC COMM	ETHERNET
CS9	DTP–1	FOT–2 OVERFILL HORN & SILENCE	FOT–2 TANK OVERFILL ALARM & SILENCE BUTTON	(2EA)14G STRANDED PAIR
CS10	FOT–1 SUMP LEAK DETECTOR	EXISTING FOT–1 TANK MONITOR	LEAK IN TRANSITION SUMP	
CS11	FOT–1 LEVEL SENSOR	EXISTING FOT–1 TANK MONITOR	LEAK IN TRANSITION SUMP	
CS12	EXISTING FOT–1 TANK MONITOR	FOT–1 OVERFILL HORN	FUEL SYSTEM TO DDC COMM	
CS13	DTP–1	DTP–3 MOTOR STARTER	DTP–3 START/STOP	14G STRANDED PAIR

EQUIPMENT SCHEDULE

ITEM	DESCRIPTION	ELECTRICAL
B–1	EXISTING BOILER: WEISHAPT DUAL FUEL BURNER MODEL RCL70/1–A 2M–MR 21–208 GPH FUEL DEMAND, 5 PSI INLET	
B–2	EXISTING BOILER: WEISHAPT DUAL FUEL BURNER MODEL RCL70/1–A 2M–MR 21–208 GPH FUEL DEMAND, 10 PSI INLET	
B–3	EXISTING BOILER: WEISHAPT DUAL FUEL BURNER MODEL RGMS70/2–A 2M–R 46–247 GPH FUEL DEMAND, 15 PSI INLET	
FOT–1	EXISTING BURIED FUEL OIL TANK	SEE SIGNAL SUMMARY SCHEDULE
FOT–2	FUEL OIL TANK: 10,000 GALLON CAPACITY, CYLINDRICAL HORIZONTAL TANK, 4–HOUR FIRE RATED, UL 2085, 30 YEAR EXTENDED WARRANTY. TANK FITTINGS AS REQUIRED TO CONNECT TRANSFER PUMP / POLISHER, LEAK MONITORING AND VENTING. FIREGUARD BY BROWN MINNEAPOLIS.	SEE SIGNAL SUMMARY SCHEDULE
DTP–1	DIESEL TRANSFER PUMPSET WITH INTEGRATED POLISHER AND MASTER CONTROL PANEL: UL–CSA, TEFC, INTEGRAL PRESSURE RELIEF, PRESSURE GAUGES, STRAINERS AND CHECK VALVES. CONTROL PANEL TO INCLUDE ALL NEW FUEL SYSTEM LEAK / LEVEL CONTROLS AND ALARMS AND INTEGRATE WITH EXISTING INCON FOT–1 TANK MONITOR. POLISHER TO INCLUDE AUTOMATIC WATER DRAIN WITH ALARM CONNECTION FOR BUILDING MANAGEMENT SYSTEM. BASIS OF DESIGN: SIMPLEX, (2X) 17 GPM @ 15 PSI.	460V / 3 PHASE –– 1–1/2 HP 120V / 1 PHASE CONTROL PANEL
DTP–2/3	DIESEL TRANSFER PUMPS – MOUNTED ON FUEL TANK FT–2	208V / 1 PHASE –– 3/4 HP
FM–1	REPLACEMENT BURIED TANK FUEL MONITOR WITH UPGRADED COMMUNICATION TO CONNECT TO DPT–1 TO ALLOW FOR BUILDING DDC MONITOR OF COMPLETE FUEL SYSTEM. BASIS OF DESIGN: INCON TS–550	120V / 1 PHASE

Revisions

LEGACY EMANUEL BOILER FUEL SYSTEM UPGRADES

Portland, Oregon

Drawing Title

PHYSICAL PLANT DETAILS

REVISED 2/29/12

REGISTERED PROFESSIONAL ENGINEER 17987 OREGON JULY 25, 1986 CORE GRATON C. KEARNS EXPIRES 6-30-2013

Date:	OCTOBER 19, 2011
Job No:	11434
Drawn By:	TMI
Checked By:	CCK

Drawing No.

M3.01

CONSTRUCTION DOCUMENTS

MADDEN&BAUGHMAN ENGINEERING, INC. 321 SW 4th Avenue, Suite 500, Portland, OR 97204 tel 503.236.7611 / fax 503.236.9411 www.maddenbaughman.com	Project: LEGACY FUEL TANK	By: JM	Sheet No. 1/
	Location: FACILITIES	Date: 1/12	Job No.
	Client: N. GANTENBEIN	Revised	
	TOTAL MECHANICAL	Date	

FUEL TANK:

· 10,000 gallons, I = 1.5
· PER ATTACHED SHOP WT = 28,255 #

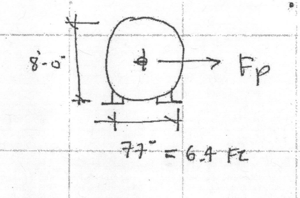

Fp = 9096 #

M o/t = 9k (4) = 36 k-ft

T = 36 / 6.4 = 5.6 kip

PDL = 28.2

.9PDL = 15.2

@ EA. CORNER

PDL RESIST = 15.2 / 4 = 3.8

TNET = −1.8 kip.

Fp @ EA ANCHOR CORNER = 9.1/4 = 2.3 kip

SEE ATTACHED OUTPUT.

FOR (2) ANCHORS EA. CORNER:

T = −1.8

V = 2.3

3/4" ϕ HILTI TZ GALV. ϕ 3/4" EMBED.

2

Legacy Emanuel Hospital
Facilities Building, NW Gantenbeign
Portland, Oregon
2010 OSSC, Design Category: D

MECHANICAL EQUIPMENT SUPPORT

$Sds := .75$ $h := 8\ ft$ $z := 0\ ft$

$Rp := 2.5$ change depending upon body Weight of unit $W := 28300$ Pounds
$ap := 2.5$ of connection

$I := 1.5$

$$Fp := .4 \cdot I \cdot ap \cdot Sds \cdot \frac{W \cdot \left(1 + 2 \cdot \frac{z}{h}\right)}{Rp}$$

$$\frac{Fp}{1.4} = 9.096 \times 10^3 \text{ ASD Pounds}$$

ANALYZE WITH PROFIS HILTI ANCHOR PROGRAM,

3/4" EXP. ANCHOR OK. 6" EMBED

3/

FIREGUARD® SPECIFICATIONS
CYLINDRICAL DESIGN
SAMPLE OUTER TANK DIMENSIONS
ALL DIAMETERS AND LENGTHS ARE NOMINAL

GALLONS	DIAMETER	LENGTH	APPROX WEIGHT (lbs.)
186	48	54	2,119
250	48	68	2,513
300	50	72	2,821
500	54	70	2,419
550	54	78	2,006
1,000	54	134	5,338
1,000	70	78	5,005
1,500	70	114	6,637
2,000	70	150	8,309
2,500	70	186	9,644
3,000	70	222	10,979
4,000	78	283	13,523
4,000	90	175	14,072
5,000	79	290	18,998
5,000	103	169	17,149
6,000	79	347	21,961
6,000	103	199	19,206
8,000	103	259	23,319
→ 10,000	103	331	28,256
12,000	103	391	32,370
15,000	127	318	35,821
20,000	127	415	44,506
25,000	127	517	55,891
30,000	127	619	64,575

Please note that all dimensions and weights are approximate. Individual tanks may vary from these values.

FIREGUARD® SPECIFICATIONS
RECTANGULAR DESIGN
SAMPLE OUTER TANK DIMENSIONS
ALL DIAMETERS AND LENGTHS ARE NOMINAL

GALLONS	LENGTH	WIDTH	HEIGHT	APPROX. WEIGHT (lbs.)
186	45	45	56	2,256
250	118	37	37	3,305
250	79	51	37	2,916
500	141	53	37	4,991
750	141	73	37	6,513
1,000	128	73	37	4,607
1,000	89	73	51	4,102
1,500	125	89	45	5,772
2,000	141	87	51	6,679
2,000	141	73	61	6,486
2,500	141	89	61	7,453
3,000	251	73	51	11,572
3,000	118	103	73	9,379
4,000	332	73	51	14,990
4,000	155	103	73	11,640
5,000	397	73	61	16,615
5,000	192	103	73	13,901
6,000	403	73	61	19,631
6,000	229	103	73	16,162
8,000	371	103	61	22,672
8,000	303	103	73	20,684
10,000	461	103	61	27,892
10,000	377	130	73	25,205
12,000	452	103	73	29,788
15,000	387	103	103	38,516
18,000	463	103	103	45,290
24,700	466	138	103	54,539

FIREGUARD®: THE ONLY TANK THAT MEETS ALL OF THESE STANDARDS

- UL 2080 Listed "Fire-Resistant" tank
- UL 2085 Listed "Protected" tank
- Both the Inner and Outer steel tanks are built to UL standards
- Uniform Fire Code UFC - Article 79 as a "Protected Tank"
- UL 2244 Aboveground Flammable Liquid Tank System
- National Fire Protection Association (NFPA) 30 & 30A
- International Fire Code(IFC), 2000-Chapter 34
- Ballistics protection per UFC Article 79, and per UL2085
- Impact protection per UFC Article 79, and per UL 2085
- California Air Resources Board (CARB) testing requirements for air emissions
- Steel Tank Institute (STI) Standard F941 for Thermally Insulated Aboveground Storage Tanks

NORTHWEST PUMP & EQUIPMENT CO.
2800 N.W. 31st Avenue • Portland, OR 97210 • (503) 227-7867 • Fax (503) 227-4008

BRANCH LOCATIONS
Kent, WA • Portland, OR • Burbank, CA • Phoenix, AZ • San Diego, CA
Spokane, WA • W. Sacramento, CA • Kennewick, WA • Las Vegas, NV • Anchorage, AK • Honolulu, HI
www.nwpump.com

4/

HILTI

www.hilti.us PROFIS Anchor 2.2.1

Company:		Page:	1
Specifier:		Project:	Legacy Emanuel Fuel a
Address:		Sub-Project I Pos. No.:	
Phone I Fax:	-|-	Date:	12/22/2011
E-Mail:			

Specifier's comments:

1. Input data

Anchor type and diameter:	Kwik Bolt TZ - CS, 3/4 (4 3/4)
Effective embedment depth:	h_{ef} = 4.750 in., h_{nom} = 5.750 in.
Material:	Carbon Steel
Evaluation Service Report:	ESR 1917
Issued I Valid:	5/1/2011 | -
Proof:	design method ACI 318 / AC 193
Stand-off installation:	e_b = 0.000 in. (no stand-off); t = 0.500 in.
Anchor plate:	l_x x l_y x t = 6.000 x 30.000 x 0.500 in. (Recommended plate thickness: not calculated)
Profile	S shape (AISC); (L x W x T x FT) = 3.000 in. x 2.330 in. x 0.170 in. x 0.260 in.
Base material:	cracked concrete , 3000, f_c' = 3000 psi; h = 12.000 in.
Reinforcement:	tension: condition B, shear: condition B; no supplemental splitting reinforcement present; edge reinforcement: none or < No. 4 bar
Seismic loads (cat. C, D, E, or F):	yes (D.3.3.4)

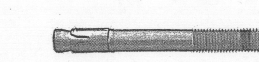

Geometry [in.] & Loading [lb, in.-lb]

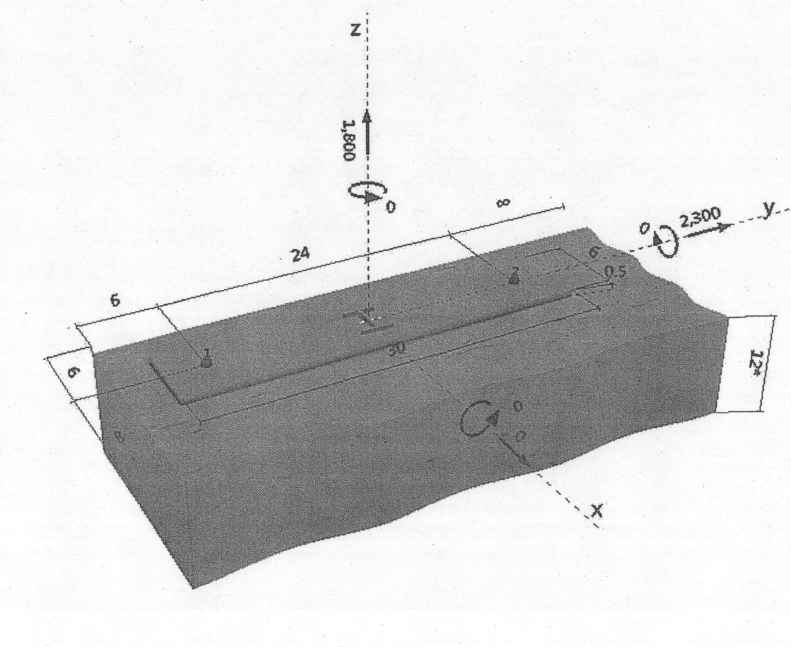

Input data and results must be checked for agreement with the existing conditions and for plausibility!
PROFIS Anchor (c) 2003-2009 Hilti AG, FL-9494 Schaan Hilti is a registered Trademark of Hilti AG, Schaan

5/

HILTI

www.hilti.us PROFIS Anchor 2.2.1

Company:		Page:	2
Specifier:		Project:	Legacy Emanuel Fuel a
Address:		Sub-Project I Pos. No.:	
Phone I Fax:	-|-	Date:	12/22/2011
E-Mail:			

2. Load case/Resulting anchor forces

Load case (governing):

Anchor reactions [lb]
Tension force: (+Tension, -Compression)

Anchor	Tension force	Shear force	Shear force x	Shear force y
1	900	1150	0	1150
2	900	1150	0	1150

max. concrete compressive strain [‰]: 0.00
max. concrete compressive stress [psi]: 0
resulting tension force in (x/y)=(0.000/0.000) [lb]: 1800
resulting compression force in (x/y)=(0/0) [lb]: 0

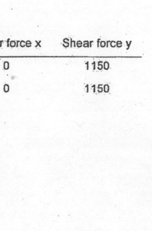

3. Tension load

Proof	Load N_{ua} [lb]	Capacity ϕN_n [lb]	Utilization β_N [%] = $N_{ua}/\phi N_n$	Status
Steel Strength*	900	18840	5	OK
Pullout Strength*	N/A	N/A	N/A	N/A
Concrete Breakout Strength**	1800	7921	23	OK

* anchor having the highest loading **anchor group (anchors in tension)

Steel Strength

Equations
N_{sa} = ESR value refer to ICC-ES ESR 1917
$\phi N_{steel} \geq N_{ua}$ ACI 318-08 Eq. (D-1)

Variables

n	$A_{se,N}$ [in.^{2}]	f_{uta} [psi]
1	0.24	106000

Calculations

N_{sa} [lb]
25120

Results

N_{sa} [lb]	ϕ_{steel}	ϕN_{sa} [lb]	N_{ua} [lb]
25120	0.750	18840	900

Input data and results must be checked for agreement with the existing conditions and for plausibility!
PROFIS Anchor (c) 2003-2009 Hilti AG, FL-9494 Schaan Hilti is a registered Trademark of Hilti AG, Schaan

HILTI

www.hilti.us PROFIS Anchor 2.2.1

Company:		Page:	3
Specifier:		Project:	Legacy Emanuel Fuel a
Address:		Sub-Project I Pos. No.:	
Phone I Fax:	-|-	Date:	12/22/2011
E-Mail:			

Concrete Breakout Strength

Equations
$N_{cbg} = \left(\frac{A_{Nc}}{A_{Nc0}}\right) \psi_{ec,N}\ \psi_{ed,N}\ \psi_{c,N}\ \psi_{cp,N}\ N_b$ ACI 318-08 Eq. (D-5)
$\phi N_{cbg} \geq N_{ua}$ ACI 318-08 Eq. (D-1)
A_{Nc} see ACI 318-08, Part D.5.2.1, Fig. RD.5.2.1(b)
$A_{Nc0} = 9\ h_{ef}^2$ ACI 318-08 Eq. (D-6)
$\psi_{ec,N} = \left(\frac{1}{1 + \frac{2\ e_N}{3\ h_{ef}}}\right) \leq 1.0$ ACI 318-08 Eq. (D-9)
$\psi_{ed,N} = 0.7 + 0.3\left(\frac{c_{a,min}}{1.5h_{ef}}\right) \leq 1.0$ ACI 318-08 Eq. (D-11)
$\psi_{cp,N} = MAX\left(\frac{c_{a,min}}{c_{ac}}, \frac{1.5h_{ef}}{c_{ac}}\right) \leq 1.0$ ACI 318-08 Eq. (D-13)
$N_b = k_c\ \lambda\ \sqrt{f_c'}\ h_{ef}^{1.5}$ ACI 318-08 Eq. (D-7)

Variables

h_{ef} [in.]	$e_{c1,N}$ [in.]	$e_{c2,N}$ [in.]	$c_{a,min}$ [in.]	$\psi_{c,N}$	c_{ac} [in.]	k_c	λ
4.750	0.000	0.000	6.000	1.000	9.000	17	1

f_c' [psi]
3000

Calculations

A_{Nc} [in.^{2}]	A_{Nc0} [in.^{2}]	$\psi_{ec1,N}$	$\psi_{ec2,N}$	$\psi_{ed,N}$	$\psi_{cp,N}$	N_b [lb]
359.30	203.06	1.000	1.000	0.953	1.000	9639

Results

N_{cbg} [lb]	$\phi_{concrete}$	$\phi_{seismic}$	ϕN_{cbg} [lb]	N_{ua} [lb]
16248	0.650	0.750	7921	1800

Input data and results must be checked for agreement with the existing conditions and for plausibility!
PROFIS Anchor (c) 2003-2009 Hilti AG, FL-9494 Schaan Hilti is a registered Trademark of Hilti AG, Schaan

HILTI

www.hilti.us PROFIS Anchor 2.2.1

Company:		Page:	4
Specifier:		Project:	Legacy Emanuel Fuel a
Address:		Sub-Project I Pos. No.:	
Phone I Fax:	-|-	Date:	12/22/2011
E-Mail:			

4. Shear load

Proof	Load V_{ua} [lb]	Capacity ϕV_n [lb]	Utilization β_V [%] = $V_{ua}/\phi V_n$	Status
Steel Strength*	1150	7634	15	OK
*Steel failure (with lever arm)**	N/A	N/A	N/A	N/A
Pryout Strength**	2300	17060	13	OK
Concrete edge failure in direction y-**	2300	6177	37	OK

* anchor having the highest loading **anchor group (relevant anchors)

Steel Strength

Equations
V_{sa} = ESR value refer to ICC-ES ESR 1917
$\phi V_{steel} \geq V_{ua}$ ACI 318-08 Eq. (D-1)

Variables

n	$A_{se,V}$ [in.^{2}]	f_{uta} [psi]
1	0.24	106000

Calculations

V_{sa} [lb]
11745

Results

V_{sa} [lb]	ϕ_{steel}	ϕV_{sa} [lb]	V_{ua} [lb]
11745	0.650	7634	1150

Input data and results must be checked for agreement with the existing conditions and for plausibility!
PROFIS Anchor (c) 2003-2009 Hilti AG, FL-9494 Schaan Hilti is a registered Trademark of Hilti AG, Schaan

HILTI

www.hilti.us PROFIS Anchor 2.2.1

Company:		Page:	5
Specifier:		Project:	Legacy Emanuel Fuel a
Address:		Sub-Project I Pos. No.:	
Phone I Fax:	-|-	Date:	12/22/2011
E-Mail:			

Pryout Strength (Concrete Breakout Strength controls)

Equations
$V_{cpg} = k_{cp}\left[\left(\frac{A_{Nc}}{A_{Nc0}}\right) \psi_{ec,N}\ \psi_{ed,N}\ \psi_{c,N}\ \psi_{cp,N}\ N_b\right]$ ACI 318-08 Eq. (D-31)
$\phi V_{cpg} \geq V_{ua}$ ACI 318-08 Eq. (D-1)
A_{Nc} see ACI 318-08, Part D.5.2.1, Fig. RD.5.2.1(b)
$A_{Nc0} = 9\ h_{ef}^2$ ACI 318-08 Eq. (D-6)
$\psi_{ec,N} = \left(\frac{1}{1 + \frac{2\ e_N}{3\ h_{ef}}}\right) \leq 1.0$ ACI 318-08 Eq. (D-9)
$\psi_{ed,N} = 0.7 + 0.3\left(\frac{c_{a,min}}{1.5h_{ef}}\right) \leq 1.0$ ACI 318-08 Eq. (D-11)
$\psi_{cp,N} = MAX\left(\frac{c_{a,min}}{c_{ac}}, \frac{1.5h_{ef}}{c_{ac}}\right) \leq 1.0$ ACI 318-08 Eq. (D-13)
$N_b = k_c\ \lambda\ \sqrt{f_c'}\ h_{ef}^{1.5}$ ACI 318-08 Eq. (D-7)

Variables

k_{cp}	h_{ef} [in.]	$e_{c1,N}$ [in.]	$e_{c2,N}$ [in.]	$c_{a,min}$ [in.]	$\psi_{c,N}$	c_{ac} [in.]	k_c
2	4.750	0.000	0.000	6.000	1.000	9.000	17

λ	f_c' [psi]
1	3000

Calculations

A_{Nc} [in.^{2}]	A_{Nc0} [in.^{2}]	$\psi_{ec1,N}$	$\psi_{ec2,N}$	$\psi_{ed,N}$	$\psi_{cp,N}$	N_b [lb]
359.30	203.06	1.000	1.000	0.953	1.000	9639

Results

V_{cpg} [lb]	$\phi_{concrete}$	$\phi_{seismic}$	ϕV_{cpg} [lb]	V_{ua} [lb]
32496	0.700	0.750	17060	2300

Input data and results must be checked for agreement with the existing conditions and for plausibility!
PROFIS Anchor (c) 2003-2009 Hilti AG, FL-9494 Schaan Hilti is a registered Trademark of Hilti AG, Schaan

9

HILTI

www.hilti.us PROFIS Anchor 2.2.1

Company:		Page:	6
Specifier:		Project:	Legacy Emanuel Fuel a
Address:		Sub-Project I Pos. No.:	
Phone I Fax:	-|-	Date:	12/22/2011
E-Mail:			

Concrete edge failure in direction y-

Equations
$V_{cbg} = \left(\frac{A_{Vc}}{A_{Vc0}}\right) \psi_{ec,V}\ \psi_{ed,V}\ \psi_{c,V}\ \psi_{h,V}\ \psi_{parallel,V}\ V_b$ ACI 318-08 Eq. (D-22)
$\phi V_{cbg} \geq V_{ua}$ ACI 318-08 Eq. (D-1)
A_{Vc} see ACI 318-08, Part D.6.2.1, Fig. RD.6.2.1(b)
$A_{Vc0} = 4.5\ c_{a1}^2$ ACI 318-08 Eq. (D-23)
$\psi_{ec,V} = \left(\frac{1}{1 + \frac{2e_V}{3c_{a1}}}\right) \leq 1.0$ ACI 318-08 Eq. (D-26)
$\psi_{ed,V} = 0.7 + 0.3\left(\frac{c_{a2}}{1.5c_{a1}}\right) \leq 1.0$ ACI 318-08 Eq. (D-28)
$\psi_{h,V} = \sqrt{\frac{1.5c_{a1}}{h_a}} \geq 1.0$ ACI 318-08 Eq. (D-29)
$V_b = \left(7\left(\frac{l_e}{d_a}\right)^{0.2}\sqrt{d_a}\right)\lambda\ \sqrt{f_c'}\ c_{a1}^{1.5}$ ACI 318-08 EQ. (D-24)

Variables

c_{a1} [in.]	c_{a2} [in.]	e_{cV} [in.]	$\psi_{c,V}$	h_a [in.]	l_e [in.]	λ	d_a [in.]
6.000	6.000	0.000	1.000	12.000	4.750	1	0.750

f_c' [psi]	$\psi_{parallel,V}$
3000	2.000

Calculations

A_{Vc} [in.^{2}]	A_{Vc0} [in.^{2}]	$\psi_{ec,V}$	$\psi_{ed,V}$	$\psi_{h,V}$	V_b [lb]
135.00	162.00	1.000	1.000	1.000	7059

Results

V_{cbg} [lb]	$\phi_{concrete}$	$\phi_{seismic}$	ϕV_{cbg} [lb]	V_{ua} [lb]
11765	0.700	0.750	6177	2300

5. Combined tension and shear loads

$\beta_N = N_{ua}/\phi N_n$	$\beta_V = V_{ua}/\phi V_n$	ζ	Utilization $\beta_{N,V}$ [%]	Status
0.227	0.372	5/3	28	OK

$\beta_{NV} = \beta_N^{\zeta} + \beta_V^{\zeta} <= 1$

Input data and results must be checked for agreement with the existing conditions and for plausibility!
PROFIS Anchor (c) 2003-2009 Hilti AG, FL-9494 Schaan Hilti is a registered Trademark of Hilti AG, Schaan

HILTI

www.hilti.us PROFIS Anchor 2.2.1

Company:		Page:	8
Specifier:		Project:	Legacy Emanuel Fuel a
Address:		Sub-Project I Pos. No.:	
Phone I Fax:	-|-	Date:	12/22/2011
E-Mail:			

7. Installation data

Anchor plate, steel: -
Profile: S shape (AISC), 3.000 in. x 2.330 in. x 0.170 in. x 0.260 in.
Hole diameter in the fixture: d_f = 0.813 in.
Plate thickness (input): 0.500 in.
Recommended plate thickness: not calculated

Anchor type and diameter: Kwik Bolt TZ - CS, 3/4 (4 3/4)
Installation torque: 1320.002 in.-lb
Hole diameter in the base material: 0.750 in.
Hole depth in the base material: 5.750 in.
Minimum thickness of the base material: 8.000 in.

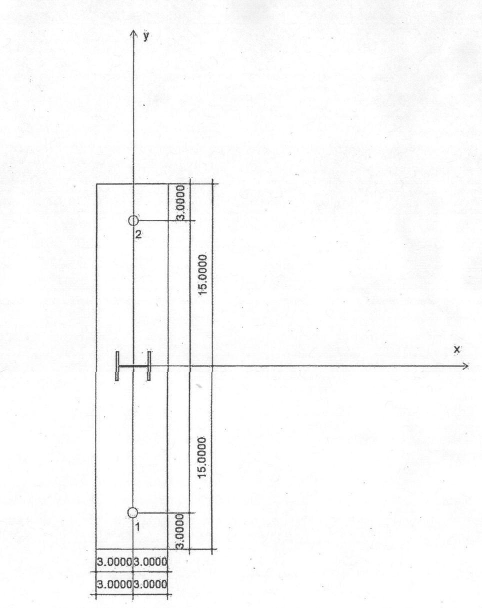

Coordinates Anchor [in.]

Anchor	x	y	c_{-x}	c_{+x}	c_{-y}	c_{+y}
1	0.000	-12.000	6.000	-	6.000	-
2	0.000	12.000	6.000	-	30.000	-

Input data and results must be checked for agreement with the existing conditions and for plausibility!
PROFIS Anchor (c) 2003-2009 Hilti AG, FL-9494 Schaan Hilti is a registered Trademark of Hilti AG, Schaan

City of Portland
Bureau of
Development Services
By E. Sandy Date 5.9.12
Approved by
Planning and Zoning Review

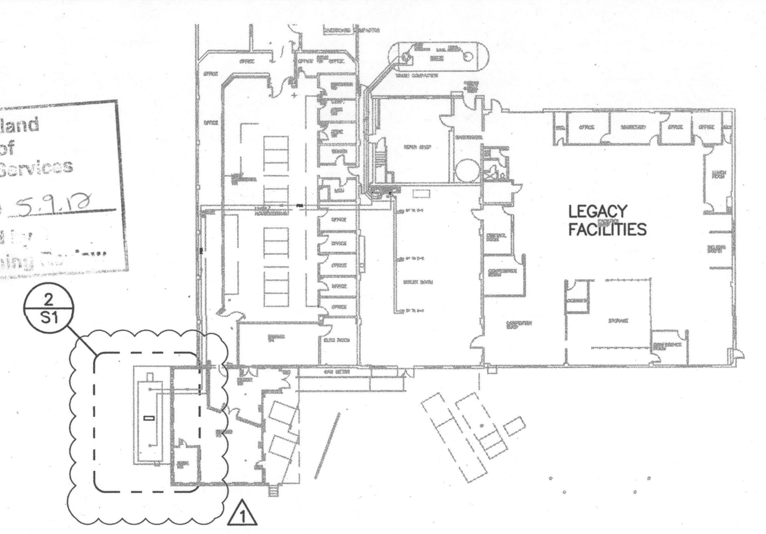

1 SITE PLAN
1" = 40'

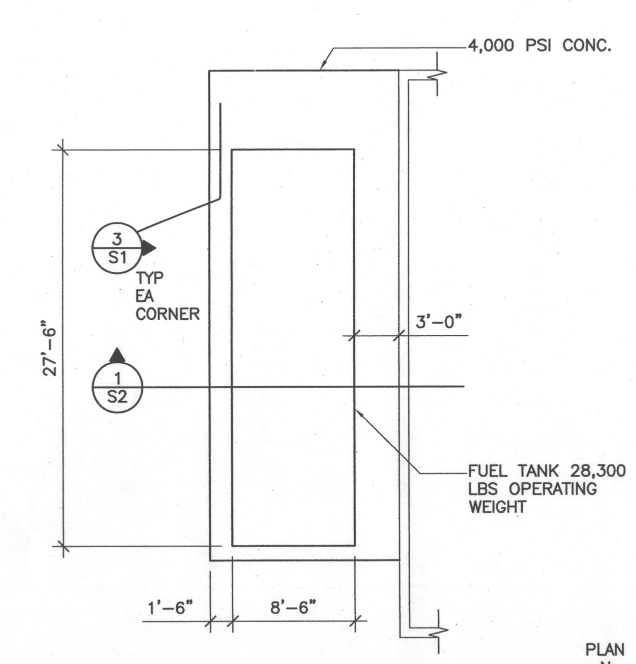

2 PLAN @ FUEL TANK
1/8" = 1'-0"

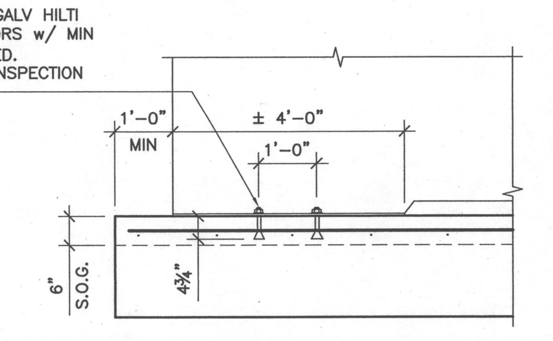

3 BASE DETAIL
1/2" = 1'-0"

MADDEN&BAUGHMAN ENGINEERING, INC.
321 SW 4th Avenue, Suite 500
Portland, OR 97204
tel 503.236.7611 / fax 503.236.9411
info@maddenbaughman.com

REGISTERED PROFESSIONAL ENGINEER 19386 OREGON JUL. 22, 1997 JEROME A. MADDEN
EXPIRES 12-31-12

BOILER FUEL SYSTEM UPGRADES
LEGACY EMANUEL HOSPITAL
PORTLAND, OREGON

1 02-06-2012

DATE 12-22-2011
PLAN
S1

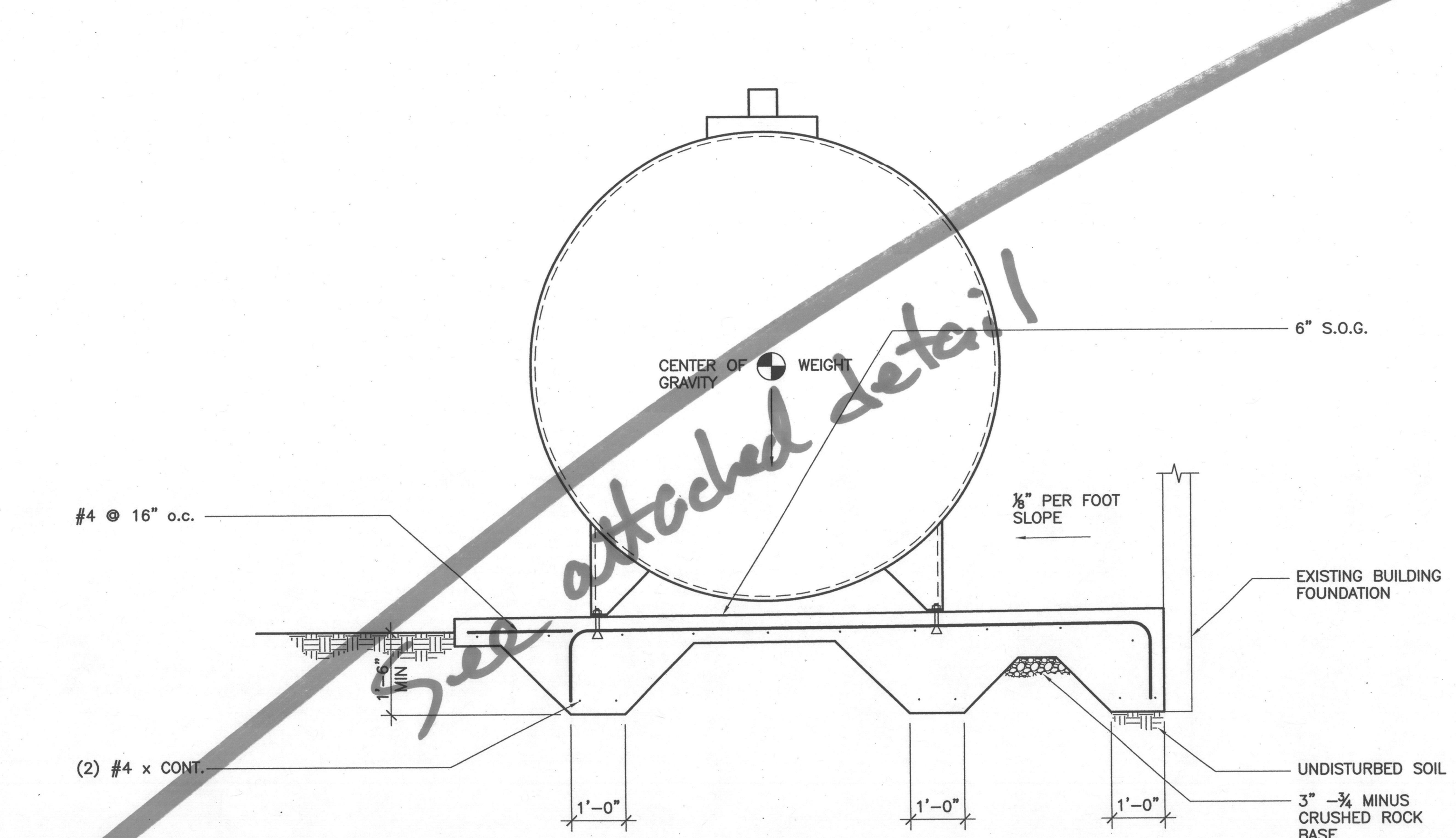

1 SECTION
1/2" = 1'-0"

MADDEN&BAUGHMAN ENGINEERING, INC.
321 SW 4th Avenue, Suite 500
Portland, OR 97204
tel 503.236.7611 / fax 503.236.9411
info@maddenbaughman.com

REGISTERED PROFESSIONAL ENGINEER 19386 OREGON JUL. 22, 1997 JEROME A. MADDEN
EXPIRES 12-31-12

BOILER FUEL SYSTEM UPGRADES
LEGACY EMANUEL HOSPITAL
PORTLAND, OREGON

DATE 12-22-2011
PLAN
S2

OREGON ELECTRIC GROUP
The Measure of Customer Satisfaction
1709 SE 3rd Avenue
Portland, OR 97214 ~ 503-234-9900

PANEL LR2

V 120/208 DATE:

Fed From: LR1

CKT	LOAD DESCRIPTION	CKT	LOAD DESCRIPTION
1	100A 3pole feed to LR4 Linen room	2	20A 3pole spare
3		4	FS 39 sorting room heat fan
5		6	Spare
7	60A 2 pole Spare	8	20A 3pole spare
9		10	K file room heat fan Spare
11	Selectron door control panel	12	
13	S file room heat fan & contrc	14	Lights and plugs
15	Spare	16	Lights and plugs
17		18	Lights and plugs
19	Office receptacles	20	Outlets dirty laundry
21	Office lights	22	Copier - Laundry
23		24	Outlets Wiremold in B136A
25	Receptacles B136J	26	Outlets Wiremold in B136A
27	Receptacles B136J	28	Housekeeping office C & D
29	40A 2 pole AC unit on roof	30	Lights B136A, B &C
31		32	Selectron door control panel
33	40A 2 pole AC unit on roof	34	Space
35		36	Space
37	30A 2 pole AC unit on roof	38	100A 3pole Feed to LR2A
39		40	
41	AC unit outlets	42	

24 HR. EMERGENCY RESPONSE 503-234-9900

OREGON ELECTRIC GROUP
The Measure of Customer Satisfaction
1709 SE 3rd Avenue
Portland, OR 97214 ~ 503-234-9900

PANEL E2AFE

V 120/208 DATE:

Fed From: E2DPFE

CKT	LOAD DESCRIPTION	CKT	LOAD DESCRIPTION
1	Boiler control circuit	2	Lights boiler room - center
3	Outlets boiler room, NW nat gas monitor	4	Lights boiler room - north
5	Spare	6	Condensate pump, lights in lunch room, shop & office
7	South hot water tank, controls and pump	8	Outlets in office
9	North hot water tank, controls and pump	10	Spare
11	Spare	12	Lights boiler room - south
13	Chemical treatment pump	14	Spare
15	Chemical treatment pump	16	Fuel oil monitor
17	Spare	18	Spare
19	Outlet B136A loft power monitoring server	20	Space
21	space	22	Space
23	Outlet B136B for HVAC server	24	Space
25	Space	26	Space
27	Space	28	Space
29	Space	30	Space

24 HR. EMERGENCY RESPONSE 503-234-9900

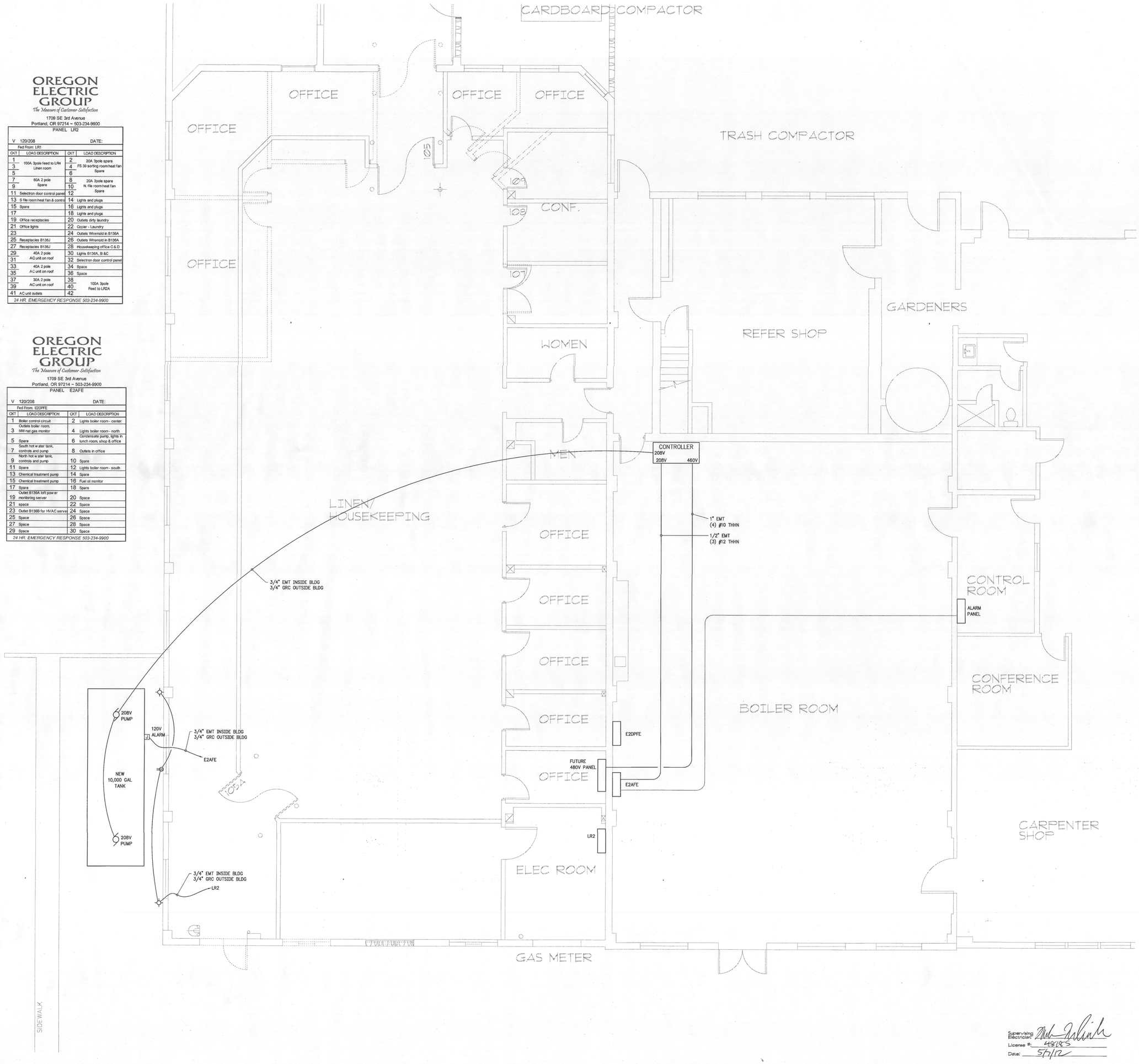

OREGON ELECTRIC GROUP
1709 S.E. 3rd AVENUE • PORTLAND, OREGON 97214
(503) 234-9900 • FAX (503) 234-1505 • www.oregon-electric.com

Consultants

Revisions

LEGACY EMANUEL
BOILER FUEL
SYSTEM UPGRADES

Portland,
Oregon

Drawing Title

PHYSICAL PLANT
POWER PLAN

Date: 07 May 2012
Job No: 11434
Drawn By: JAH
Checked By: CD

Drawing No.

E2.01

CONSTRUCTION
DOCUMENTS

Supervising Electrician: [signature]
License #: 48185
Date: 5/7/12

L:\11434\-Elec-Bldg\signed\E2-01.dwg, tab=E2-01, plotted Monday, 07 May 2012 - 8:59am, by HALEY.
Note: 11434 Elec Bldg Signed
Title: Physical Plant Power Floor Plan
Date: 05/07/2012