2/27/12

FRAMER__JOEL___
PH. # _1-971-270-8118

___/___/____

City of Portland
REVIEWED FOR CODE COMPLIANCE
MAY 23 2012
Permit Number

WUTZKE RES
9828 S.W. 31 ST AVE
PORTLAND OREGON___

MOUNTAINWOOD HOMES

4/12 PITCH
VAULT AS REQ.
5 1/2" SEAT-CUT
1-6-0 O/H
25# SNOW
COMP.

BOB GILLIS
ARIEL TRUSS
1-360-281-0518

OPTIONAL SHEETED
GABLE

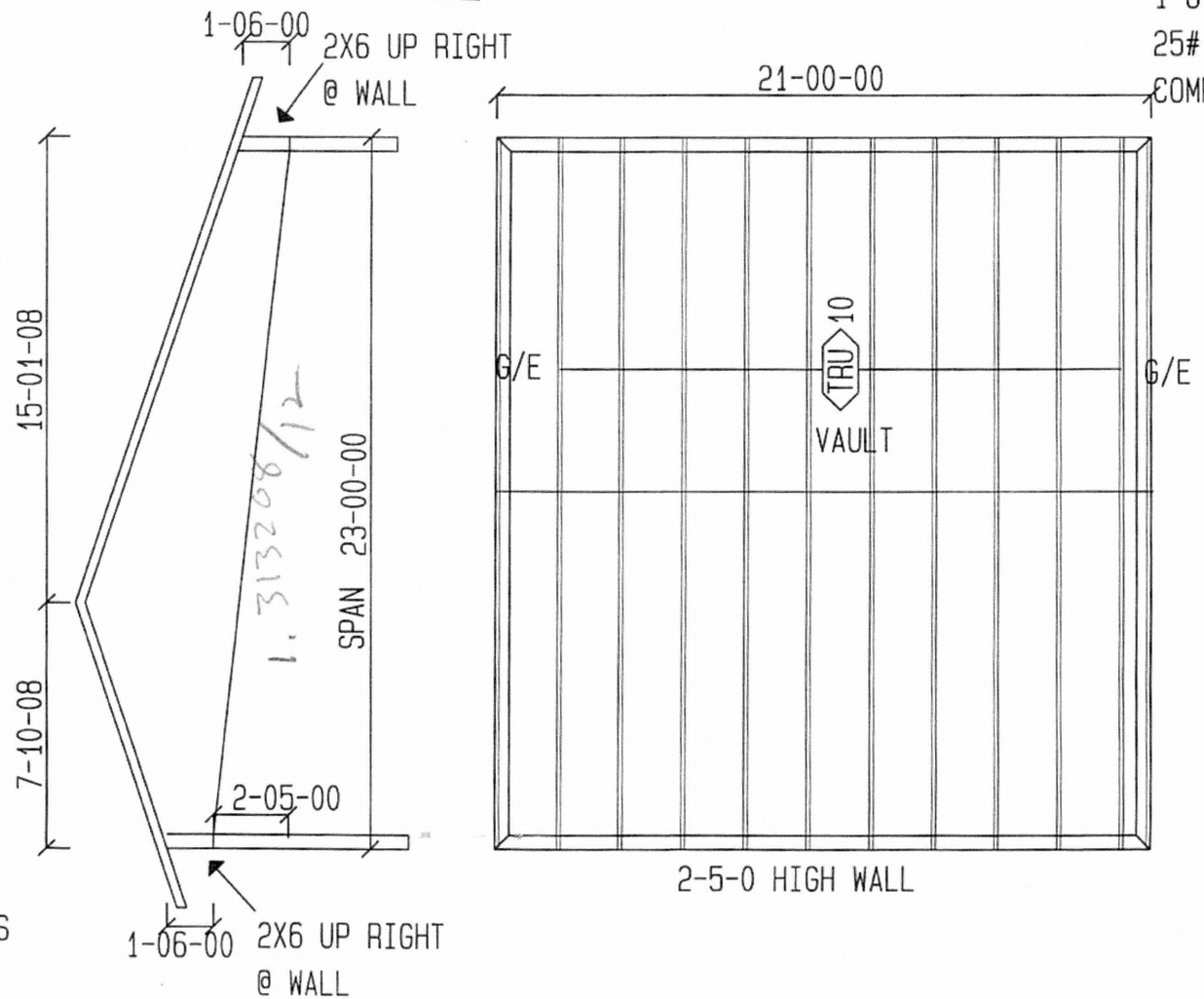

11_VENTS
11_BLOCKS
22_H-CLIPS
___HANGER

12-134309 RS

Copyright (c) CompuTrus Inc.

This design prepared from computer input by
ARIEL TRUSS VANCOUVER, WASHINGTON

LUMBER SPECIFICATIONS
TC: 2x4 DF #1&BTR
BC: 2x4 DF #1&BTR
WEBS: 2x4 DF STAND;
2x6 DF SS A

TC LATERAL SUPPORT <= 12"OC. UON.
BC LATERAL SUPPORT <= 12"OC. UON.

OVERHANGS: 18.0" 18.0"

Connector plate prefix designators:
C,CN,C18,CN18 (or no prefix) = CompuTrus, Inc
M,M2OHS,M18HS,M16 = MiTek MT series

TRUSS SPAN 23'- 0.0"
LOAD DURATION INCREASE = 1.15
SPACED 24.0" O.C.

LOADING
LL(25.0)+DL(7.0) ON TOP CHORD = 32.0 PSF
DL ON BOTTOM CHORD = 10.0 PSF
TOTAL LOAD = 42.0 PSF

LL = 25 PSF Ground Snow (Pg)

LIMITED STORAGE DOES NOT APPLY DUE TO THE SPATIAL REQUIREMENTS OF IBC 2009 AND IRC 2009 NOT BEING MET.

BOTTOM CHORD CHECKED FOR 10PSF LIVE LOAD. TOP AND BOTTOM CHORD LIVE LOADS ACT NON-CONCURRENTLY.

City of Portland
REVIEWED FOR CODE COMPLIANCE
MAY 23 2012
Permit Number

IBC 2009 MAX MEMBER FORCES 4WR/GDF/Cq=1.00

1- 2=(-44) 65	7- 8=(-154) 125	7- 2=(-1075) 500	5-10=(-1100) 487
2- 3=(-1120) 374	8- 9=(-391) 1605	2- 8=(-217) 938	
3- 4=(-1134) 365	9-10=(-57) 182	8- 3=(0) 354	
4- 5=(-1719) 519		8- 4=(-633) 170	
5- 6=(-44) 65		4- 9=(-176) 181	
		9- 5=(-359) 1483	

BEARING LOCATIONS	MAX VERT REACTIONS	MAX HORZ REACTIONS	BRG SIZE	REQUIRED BRG AREA SQ.IN.	(SPECIES)
0'- 0.0"	-176/ 1139V	-42/ 171H	5.50"	0.61	DF (1870)
23'- 0.0"	-192/ 1139V	-42/ 171H	5.50"	0.61	DF (1870)

VERTICAL DEFLECTION LIMITS: LL=L/240, TL=L/180
MAX LL DEFL = -0.009" @ -1'- 6.0" Allowed = 0.150"
MAX TL DEFL = -0.010" @ -1'- 6.0" Allowed = 0.200"
MAX LL DEFL = -0.061" @ 15'- 1.0" Allowed = 1.104"
MAX TL DEFL = -0.103" @ 15'- 1.0" Allowed = 1.472"
MAX LL DEFL = -0.009" @ 24'- 6.0" Allowed = 0.150"
MAX TL DEFL = -0.010" @ 24'- 6.0" Allowed = 0.200"

MAX HORIZ. LL DEFL = 0.010" @ 22'- 9.2"
MAX HORIZ. TL DEFL = 0.017" @ 22'- 9.2"

This truss does not include any time dependent deformation for long term loading (creep) in the total load deflection. The building designer shall verify that this parameter fits with the intended use of this component.

Design conforms to main windforce-resisting system and components and cladding criteria.

Wind: 110 mph, h=20ft, TCDL=4.2,BCDL=6.0, ASCE 7-05, Enclosed, Cat.2, Exp.B, MWFRS, interior zone, load duration factor=1.6

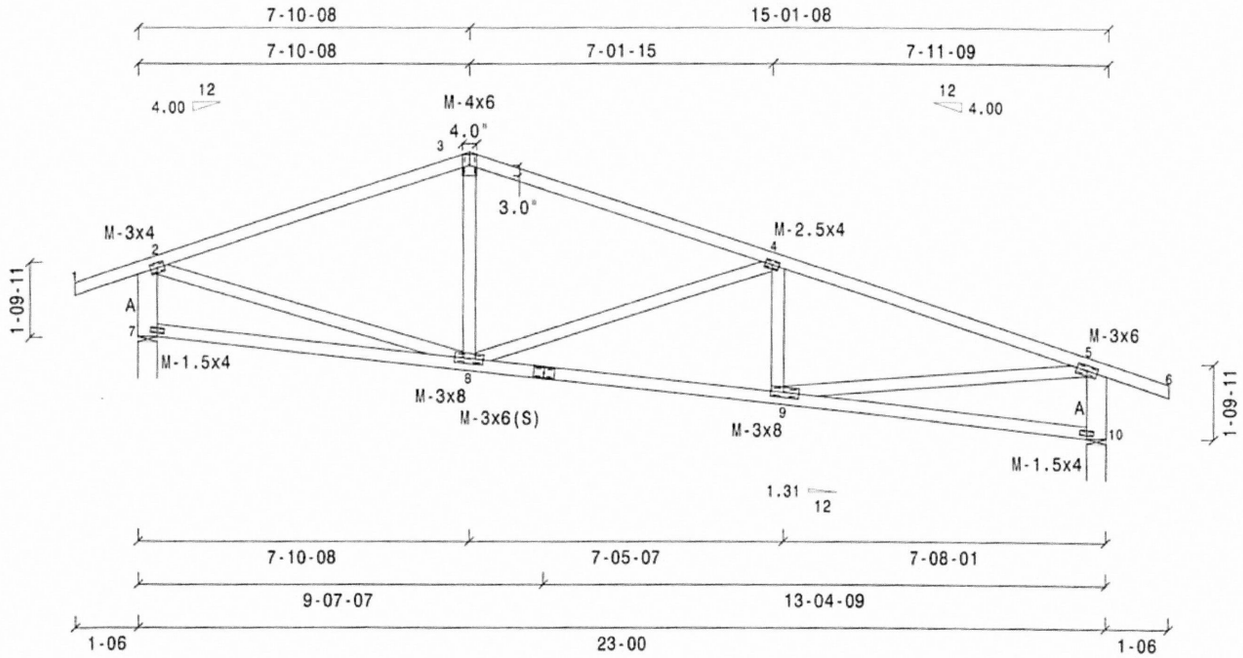

JOB NAME: MOUNTAINWOOD HOMES 23-0-0 - A2

Scale: 0.2415

Truss: A2

DES. BY: JJ
DATE: 3/30/2012
SEQ.: 5138152
TRANS ID: 335388

WARNINGS:
1. Builder and erection contractor should be advised of all General Notes and Warnings before construction commences.
2. 2x4 compression web bracing must be installed where shown +.
3. All lateral force resisting elements such as temporary and permanent stability bracing must be designed by designer of complete structure. CompuTrus assumes no responsibility for such bracing.
4. No load should be applied to any component until after all bracing and fasteners are complete and at no time should any loads greater than design loads be applied to any component.
5. CompuTrus has no control over and assumes no responsibility for the fabrication, handling, shipment and installation of components.
6. This design is furnished subject to the limitations set forth by TPI/WTCA in BCSI, copies of which will be furnished upon request.

CompuTrus, Inc. Software 7.6.3-SP6(1L)-E

GENERAL NOTES, unless otherwise noted:
1. This truss design is adequate for the design parameters shown. Review and approval is the responsibility of the building designer, not the truss designer or truss engineer.
2. Design assumes the top and bottom chords to be laterally braced at 2' o.c. and at 10' o.c. respectively unless braced throughout their length by continuous sheathing such as plywood sheathing(TC) and/or drywall(BC).
3. 2x Impact bridging or lateral bracing required where shown + +
4. Installation of truss is the responsibility of the respective contractor.
5. Design assumes trusses are to be used in a non-corrosive environment, and are for "dry condition" of use.
6. Design assumes full bearing at all supports shown. Shim or wedge if necessary.
7. Design assumes adequate drainage is provided.
8. Plates shall be located on both faces of truss, and placed so their center lines coincide with joint center lines.
9. Digits indicate size of plate in inches.
10. For basic connector plate design values see ESR-2529 (CompuTrus) and/or ESR-1311, ESR-1988 (MiTek)

REGISTERED PROFESSIONAL ENGINEER
9961
OREGON
OCTOBER 6, 1978
SCOTT R. CARROLL
3/30/12
EXPIRES 12/31/13

SCOTT R. CARROLL
STATE OF WASHINGTON
17778
REGISTERED
PROFESSIONAL ENGINEER
3/30/12
EXPIRES 6/10/13

LUMBER SPECIFICATIONS
TC: 2x4 DF #1&BTR
BC: 2x4 DF #1&BTR
WEBS: 2x4 DF STAND;
2x6 DF SS A

TC LATERAL SUPPORT <= 12"OC. UON.
BC LATERAL SUPPORT <= 12"OC. UON.

M-1.5x4 or equal at non-structural vertical members (uon).

Unbalanced live loads have been considered for this design.

Connector plate prefix designators:
C,CN,C18,CN18 (or no prefix) = CompuTrus, Inc
M,M20HS,M18HS,M16 = MiTek MT series

TRUSS SPAN 23'- 0.0"
LOAD DURATION INCREASE = 1.15
SPACED 24.0" O.C.

LOADING
LL(25.0)+DL(7.0) ON TOP CHORD = 32.0 PSF
DL ON BOTTOM CHORD = 10.0 PSF
TOTAL LOAD = 42.0 PSF

LL = 25 PSF Ground Snow (Pg)

LIMITED STORAGE DOES NOT APPLY DUE TO THE SPATIAL REQUIREMENTS OF IBC 2009 AND IRC 2009 NOT BEING MET.

BOTTOM CHORD CHECKED FOR 10PSF LIVE LOAD. TOP AND BOTTOM CHORD LIVE LOADS ACT NON-CONCURRENTLY.

City of Portland
REVIEWED FOR CODE COMPLIANCE
MAY 23 2012
Permit Number

Design conforms to main windforce-resisting system and components and cladding criteria.

Wind: 110 mph, h=20ft, TCDL=4.2,BCDL=6.0, ASCE 7-05, Enclosed, Cat.2, Exp.B, MWFRS, interior zone, load duration factor=1.6

REFER TO COMPUTRUS STANDARD GABLE END DETAIL FOR COMPLETE SPECIFICATIONS.

Note:Truss design requires continuous bearing wall for entire span UON.

NOTE: DESIGN ASSUMES SHEATHING TO ONE FACE.

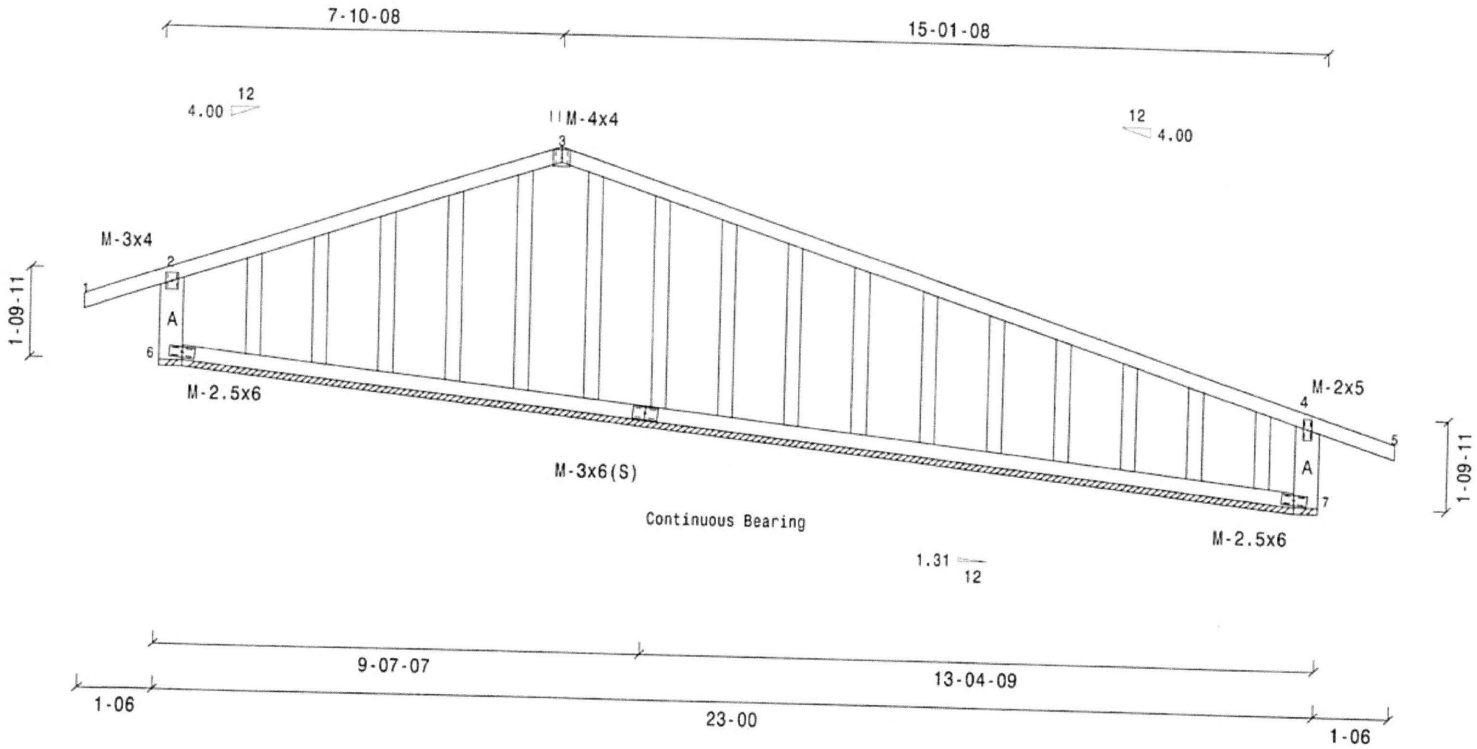

JOB NAME: MOUNTAINWOOD HOMES 23-0-0 - A1

Scale: 0.2786

Truss: A1

DES. BY: JJ
DATE: 3/30/2012
SEQ.: 5138151
TRANS ID: 335388

WARNINGS:
1. Builder and erection contractor should be advised of all General Notes and Warnings before construction commences.
2. 2x4 compression web bracing must be installed where shown +.
3. All lateral force resisting elements such as temporary and permanent stability bracing must be designed by designer of complete structure. CompuTrus assumes no responsibility for such bracing.
4. No load should be applied to any component until after all bracing and fasteners are complete and at no time should any loads greater than design loads be applied to any component.
5. CompuTrus has no control over and assumes no responsibility for the fabrication, handling, shipment and installation of components.
6. This design is furnished subject to the limitations set forth by TPI/WTCA in BCSI, copies of which will be furnished upon request.

CompuTrus, Inc. Software +7.6.3-SP7(1L)-Z

GENERAL NOTES, unless otherwise noted:
1. This truss design is adequate for the design parameters shown. Review and approval is the responsibility of the building designer, not the truss designer or truss engineer.
2. Design assumes the top and bottom chords to be laterally braced at 2' o.c. and at 10' o.c. respectively unless braced throughout their length by continuous sheathing such as plywood sheathing(TC) and/or drywall(BC).
3. 2x Impact bridging or lateral bracing required where shown + +
4. Installation of truss is the responsibility of the respective contractor.
5. Design assumes trusses are to be used in a non-corrosive environment, and are for "dry condition" of use.
6. Design assumes full bearing at all supports shown. Shim or wedge if necessary.
7. Design assumes adequate drainage is provided.
8. Plates shall be located on both faces of truss, and placed so their center lines coincide with joint center lines.
9. Digits indicate size of plate in inches.
10. For basic connector plate design values see ESR-2529 (CompuTrus) and/or ESR-1311, ESR-1988 (MiTek).

REGISTERED PROFESSIONAL ENGINEER
9961
OREGON
OCTOBER 6, 1978
SCOTT R. CARROLL
3/30/12
EXPIRES 12/31/13

SCOTT R. CARROLL
STATE OF WASHINGTON
17778
REGISTERED
PROFESSIONAL ENGINEER
3/30/12
EXPIRES 6/10/13

Job Transmittal

CompuTrus, Inc.

250 Klug Circle, Corona, CA 92880
(951) 245-9525 Fax (951) 273-0040

Transaction ID: **335388**

TO: ***ARIEL TRUSS CO., INC./WA***

ATT: ***Truss Department***

DATE: ***3/30/2012***

Drawings	Repairs	Sequence #'s	Description
2	0	5138151-5138152	MOUNTAINWOOD HOMES 23-0-01 -

Transmittal Notes:

Design Notes:

City of Portland
REVIEWED FOR CODE COMPLIANCE
MAY 23 2012
Permit Number

FTP:335388.zip

Copyright CompuTrus, Inc.

ARIEL TRUSS CO., INC.

7827

616 NW 139th Street
Vancouver, WA 98685
Phone (360) 574-7333 Fax (360) 574-7334

Customer: MOUNTAIN WOOD HM.	Delivery: WUTZKE RES.	Our Job #:
Street:	9828 S.W. 31 SR AVE	Bid Date: 4/2/2012
City:	PORTLAND ORE	Salesman: BOB G
State: Zip:	Plan #: P.O.#:	Framer: JOEL
Phone #: 1-971-270-8118	Fax#:	Framer Ph.#:

Tentative delivery date:
Please call dispatcher to confirm 24 hours prior to need.

Pitch: 4/12 Overhang: 1-6-0 Spacing: 24 O/C
Top Chord: 2X4 Bottom Chord: 2X4 Web: 2X4
Truss Load: 25SNOW # P.S.F. Type Of Roofing: COMP.

TERMS

Credit Approved:
Applied For:
C.O.D:

All invoices not pd in full by day 60 will be liened
A $300 lien fee will be added to the total due

Description:

TRUSSES PER ARIEL DRAWING
PLEASE CONFIRM MEASUREMENTS 5-DAYS PRIOR TO DELIVERY
BID EXCLUDES ADDITIONAL CHARGES FOR HVAC UNITS AND SPRINKLER SYSTEMS

In the event Ariel has provided engineering and the customer fails to order from Ariel, the customer shall pay $35.00 per page for such engineering.

ALL LUMBER IS GREEN DOUG FIR UNLESS OTHERWISE NOTED

SHEETED GABLES ARE NOT INCLUDED UNLESS OTHERWISE NOTED

Seller disclaims any liaility for the negative effects of the emergence of mold or mildew, and disclaims any duty to undertake any action to inspect, mitigate or remover mold and mildew from materials supplied by the seller.

A signed copy of this bid form must be returned to us prior to ordering and scheduling trusses.Please confirm pitch and O/H.

Trusses: $750.00
PLUS Sales Tax:
Sub Total:
Additional Crane Time:
Jobsite Towing:
Total:

F.O.B. Jobsite Ground Drop: F.O.B. Our Yard: F.O.B. Jobsite Plateline: XX

Ariel Truss will not be responsible for any defects, specifically including NAILING resulting from the customers selection and use of L.P. siding.

Site must be sufficiently clear and stable for truck to safely set trusses on plate. Ariel is not responsible for mud on streets, damage to curbs, driveways, and underground systems, or position of plateline placement. Reasonable time will be allowed to place trusses on plate line (not stand). Additional crane time, if available, will be charged at a rate of $ 135.00 per hour.

Absolutely NO backcharges will be accepted without a purchase order from ARIEL TRUSS CO., INC.

PRICE SUBJECT TO CHANGE DUE TO PRICE OF LUMBER

All past due accounts over 30 days will be charged 1.5% per month (18% per annum) plus all collections and attorney fees.

City of Portland
Bureau of Development Services
MAY 23 2012
Permit Number

We agree to furnish the items above for the amount shown, provided this quote is accepted within: 5 days from this date and further provided delivery is ordered within 15 days of this date.

BY: BOB GILLIS

Authorized signature below approves this bid proposal for prompt processing. I have read and agree with the terms of this order. **AUTHORIZED SIGNATURE:** **DATE:**

City of Portland, Oregon - Bureau of Development Services

1900 SW Fourth Avenue • Portland, Oregon 97201 • 503-823-7300 • www.portlandonline.com/bds

Simple Site Erosion Control Requirements Form

Project or Permit Number _____

Project Address 9828 SW 31 ST AV PORTLAND OR

Name of Responsible Party (print) Joel RAFTEN MOUNTAINWOOD HOMES

Day Phone 971 270 8118 **FAX** _____ **email** JRAFTEN@MOUNTAINWOODHOMES.COM

Erosion control inspections are required and it is your responsibility to request these inspections.

Erosion control measures are required on this site. Because of the size and slope, a drawn plan is not required. Erosion Control Measures and inspections are required prior to beginning foundation excavation. This form may only be used for simple sites:

1. Flat (less than 10% slope before development)
2. More than 50 feet from a wetland or waterbody
3. Outside an environmental or greenway zone
4. Less than 10,000 sq. ft. of ground disturbance
5. Not a land division of 10,000 sq. ft. or more

This is an agreement that the applicant and/or responsible parties will use erosion control during this project as required. The applicant and/or responsible party must sign this form to comply with Section 10.40.020 of the Code. Details for the measures outlined below are located in the City of Portland Erosion Control Manual, available at either the Development Services Center or on our Web site at ***www.portlandonline.com/bds***

	Minimum Erosion Control Requirements	Additional Requirements
1.	Temporary sediment control (silt fences, bio-filter bags or fiber rolls, storm drain inlet protection).	Prevent the transport of sediment from the site (Manual Sections 2-2 and 4-2) Call for #200 inspection.These items must be provided even with undisturbed vegetative buffers as allowed by manual.
2.	Stabilize access points by installing a gravel construction entrance. Do not use rock or dirt ramps in the gutter, use a wood ramp if needed to get over curb.	Limit construction vehicle access, whenever possible, to one route. Stabilize access points. Provide street cleaning by sweeping or shoveling any sediment that may have been tracked out. Place sediment in a suitable disposal area where it will not erode again. (Manual Sections 2-2 and 4-1)
3.	Stabilize all soils, including stockpiles that are temporarily exposed. Use one or more of the temporary soil stabilization Best Management Practices (BMP's): temporary grasses, mulch applications, erosion blankets, plastic sheeting, plus dust control measures.	Soil Stabilization (Manual Sections 2-2 and 4-4)
4.	Maintain erosion controls identi ed in requirements 1 through 3 above according to specifications prescribed in manual.	Inspect and maintain required erosion and sediment controls to ensure continued performance of their intended function. (Manual Chapters 4 and 5)
5.	Comply with the necessary development activity controls, including controls for fuel spill control, waste removal, concrete waste management or painting preparation.	During construction, prevent the introduction of pollutants in addition to sediment into stormwater. (Manual Section 5)
6.	Use one or more of the following to permanently stabilize soils before final building inspection: Permanent vegetative cover, mulch applications or application of sod.	After construction but before project completion, permanently stabilize all exposed soils that have been disturbed during construction. (Manual Sections 4-4)
7.	Prevent sediment from entering all storm drains, including ditches, which receive runoff from the disturbed area.	Remove temporary drain inlet protection measures after final site clean-up. Call for #210 inspection.
8.	Post signage on-site that identifies the City's Erosion Control complaint number	The sign will be provided upon approval of the pre-construction inspection. It must be maintained on-site until the final inspection.

You must request a preconstruction erosion control inspection prior to construction.
Call 503-823-7000 and request a #200 inspection using your IVR number.

I agree to meet each requirement and use appropriate erosion control measures as outlined above to prevent erosion and sedimentation from leaving the site of project/permit number referenced. **I understand that all inspections are still required**, and that failure to install or maintain adequate measures may result in a re-inspection fees or additional fines. A permanent erosion control inspection #210 will be required prior to a final building inspection.

Signature of Responsible Party
Property Owner or Owner's Agent _____ Date 4-18-12

STRUCTURAL NOTES

CODE: 2010 O.S.S.C. AND 2011 O.R.S.C.

DESIGN LOADS:

DEAD LOAD	- AS REQUIRED
LIVE LOAD	- 40 PSF
SNOW LOAD	- 25 PSF
SEISMIC	- D1 SEISMIC DESIGN CATEGORY PER O.R.S.C.
WIND:	- ASCE 7 95mph 3-SEC GUST EXP. B
SOIL BEARING	- 1500 PSF ASSUMED

EARTHWORK:

1. EXCAVATE TO LINES & LEVELS SHOWN ON DRAWINGS. ALL FOOTINGS TO BEAR ON FIRM UNDISTURBED NATIVE SANDS

CONCRETE:

1. REFERENCE SPECIFICATION - ACI 301. PLANT MIX PER ASTM C94.
2. STRENGTH:
   A. GROUND FLOOR SLAB - 3,000 PSI AT 28 DAYS
   B. FOOTINGS, WALLS 2,500 PSI @ 28 DAYS
3. REINFORCING - ASTM A615, GRADE 60. LAP BARS AS SHOWN ON PLAN WITH MIN. LAP OF 44 BAR DIAMETERS. PROVIDE 24" HOOKS AT CORNERS.
4. BOLTS:
   A. ANCHOR BOLTS - ASTM A307
   B. EXPANSION BOLTS - HILTI KWIK-BOLT-TZ. SPECIAL INSPECTION REQUIRED.
   C. ADHESIVE ANCHORS - HILTI-RE 500-SD OR SIMPSON SET-XP. SPECIAL INSPECTION REQUIRED.
5. COVER - AS FOLLOWS UNLESS SHOWN OTHERWISE ON PLANS.
   A. CONCRETE PLACED AGAINST EARTH - 3"
   B. FORMED CONCRETE AGAINST EARTH - 2".
   C. SECOND FLOOR SLAB - ¢
6. FINISH - PER ARCHITECT
7. SUBMITTALS: (4 COPIES)
   A. MIX DESIGNS PER IBC 1903
   B. REINFORCING SHOP DRAWINGS

CARPENTRY:

1. REFERENCE SPECIFICATION - IBC CHAPTER 23.
2. LUMBER - DOUGLAS FIR WITH MOISTURE CONTENT PER SPECIFICATION. ALL IN CONTACT WITH CONCRETE TO BE PRESSURE PRESERVATIVE TREATED. GRADE AS FOLLOWS.
   A. POSTS AND BEAMS 6X AND GREATER - D.F. NO 1.
   B. POSTS AND BEAMS 4X SMALLER - D.F. NO 2 OR BETTER
   C. STUDS - D.F. STUD GRADE OR BETTER
   D. PLATES & SILLS - DF NO. 2 P.T. AT CONCRETE SLAB.
   - KILN DRIED D.F. STANDARD TYPICAL
3. SHEATHING - PLYWOOD, ORIENTED STRANDBOARD OR APPROVED EQUAL.
   A. ROOF & WALL SHEATHING - APA 24/0. THICKNESS & NAILING PER PLAN.
   B. FLOOR SHEATHING - APA - 48/24. THICKNESS AND NAILING PER PLAN.
4. PLYWOOD WEB JOISTS- TRUS JOIST TJI SERIES OR APPROVED EQUAL. BRIDGING. BLOCKING & ERECTION BRACING PER MANUFACTURER'S RECOMMENDATION.
5. GLUE LAMINATED BEAMS - DOUGLAS FIR, COMBINATION 24F-V4, FABRICATED WITH WATER PROOF GLUE. FINISH PER PROJECT SPECIFICATIONS.
6. P.T. GLUE LAMINATED BEAMS - EUS 24F-V5M1 / SP, FABRICATED WITH WATER PROOF GLUE. FINISH PER PROJECT SPECIFICATIONS.
7. GLUE LAMINATED COLUMNS - DOUGLAS FIR, COMBINATION 24F-V8, FABRICATED WITH WATER PROOF GLUE. FINISH PER PROJECT SPECIFICATIONS.
8. PARALLAM BEAMS - 2.0 E BY TRUS JOIST.
9. TIMBERSTRAND BEAMS - 3-1/2", 1.5E BY TRUS JOIST
10. TIMBERSTRAND BLOCKING - LSL 1-3/4" BY TRUS JOIST.
11. CONNECTIONS - SIMPSON STRONG-TIE OR USP, GALVANIZED.
12. FRAMING - PER INDUSTRY & CODE STANDARDS FOR ALL DETAILS NOT SHOWN. REFER TO IBC SECTIONS 2324, 2325 AND 2326.
13. NAILING - USE COMMON TYPE NAILS. MINIMUM NAILING PER IBC TABLE NO. 23-1-Q UNLESS NOTED OTHERWISE ON PLANS.

COMMON WIRE NAIL	PNEUMATIC NAIL DIAMETER	MINIMUM NAIL LENGTH	NAIL APPLICATION
30D COMMON	0.207"ø P-NAIL	4-1/2"	3X DECKING
40D COMMON	0.225"ø P-NAIL	5"	4X DECKING
20D COMMON	0.192"ø P-NAIL	4"	FRAMING
16D COMMON	0.162"ø P-NAIL	3-1/2"	FRAMING
10D COMMON	0.148"ø P-NAIL	3"	FRAMING
N/A	0.148"ø P-NAIL	2-3/8"	FLR SHEATHING
8D COMMON	0.131"ø P-NAIL	2-1/2"	ROOF SHEATHING
N/A	0.162"ø P-NAIL	3-1/2"	STRAPS

14. DRYING - PRIOR TO INSTALLATION OF GYPSUM WALL BOARD, DRY COMPLETED TO A MAXIMUM MOISTURE CONTENT OF 15%.
15. SUBMITTALS - SHOP DRAWINGS, 4 COPIES.
16. PREFABRICATED WOOD TRUSSES:
    A. REFERENCE STANDARD - IBC STANDARD 25-17.
    B. PERFORMANCE REQUIREMENTS - PROVIDE WOOD TRUSSES DESIGNED AND FABRICATED TO SUPPORT THE LOADS SHOWN WITH A TOTAL LOAD DEFLECTION LESS THAN L/360.
    C. SUBMITTALS: (3 COPIES) STRUCTURAL CALCULATIONS STAMPED BY AN ENGINEER REGISTERED IN OREGON & SHOP DRAWINGS SHOWING ALL FABRICATION, ERECTION AND INSTALLATION DETAILS.
17. UNLESS NOTED OTHERWISE, ALL BEAMS & GIRDER TRUSSES TO BE SUPPORTED AT ENDS BY:
    A. MULTIPLE STUDS EQUAL TO BEAM WIDTH (TRIPLE STUD MIN) WHEN LOCATED IN WALL. CONTINUE ON ALL FLOORS DOWN TO FOUNDATION WITH SOLID BLOCKING AT FLOORS. CONN STUDS TOGETHER WITH 16D @ 12" O.C.
    B. SOLID POST EQUAL TO BEAM WIDTH WHEN FREE STANDING. EXTEND CONTINUOUS FOR FULL HEIGHT DOWN TO SOLID BEARING.

SHEAR WALL SCHEDULE(1-13)

MARK	REF NOTES: (1,9) SHEATHING	Note: (2) NAIL SIZE	EDGE NAIL'G SPACING	FIELD NAIL'G SPACING	SILL TO CONCRETE CONNECTION. NOTE: (3)	SILL TO WOOD CONNECTION. Note (7)	SHEAR TRANSFER CLIPS (8)
A	7/16" OSB (1) SIDE (6)	8d	6"	12"	MASA ANCHORS @ 48" O.C.	16D @ 6" O/C	A35 OR MPAI @ 24" O/C
B	7/16" OSB (1) SIDE (6)	8d	4"	12"	MASA ANCHORS @ 36" O.C. (12)	16D @ 4" O/C	A35 OR MPAI @ 18" O/C

NOTES:

1) C-D, D-C SHEATHING, PLYWOOD PANEL SIDING AND OTHER GRADES COVERED IN PS1-95. ALL WALL CONSTRUCTION TO CONFORM TO OSSC TABLE 2306.4.1.
2) USE COMMON WIRE NAILS FOR ALL WOOD SHEATHING AND COOLER NAILS FOR GYPBOARD SHEATHING.
3) A.B. MINIMUM 7" EMBED INTO CONCRETE. 3"X3"X¼" PLATE WASHERS REQ'D AT ALL SHEAR WALL A.B.'s. N/A @ MASA ANCHORS.
4) PANEL JOINTS SHALL BE OFFSET TO FALL ON DIFFERENT FRAMING MEMBERS OR FRAMING SHALL BE 3X OR THICKER AND NAILS ON EACH SIDE SHALL BE STAGGERED.
5) 3X OR DBL 2X FRAMING AT ALL ADJOINING PANEL EDGES AND NAILS SHALL BE STAGGERED.
6) ALL EDGES BLOCKED.
7) COMMON WIRE NAILS.
8) CLIP TO BE ATTACHED FROM CONTINUOUS BLOCKING TO TOP OF CONTINUOUS TOP PLATES. CLIPS ARE NOT REQUIRED AT GYP BD WALLS BUT BLOCKING IS ATTACHED PER THE TOENAILING SCHEDULE.
9) SEE ATTACHED TYPICAL SHEARWALL DETAILS.
10) SHEATHING TO BE STRUCTURAL 1 SHEATHING.
11) VALUES ARE FOR FRAMING OF H-F.
12) SEE PLAN FOR WALLS WHERE SEISMIC DESIGN SHEAR IS GREATER THAN 350 PLF (ASD). 3X OR DBL 2X AT PANEL EDGES AND SILL. STAGGER NAILS. NAIL AND GLUE DBL 2X SILL TOGETHER W/ 10D GALVANIZED @ 4" O/C STAGGERED, OR USE A 3X. FOR WALLS WITH THE LARGER SILLS, ANCHOR BOLT SPACING MAY BE INCREASED BY A FACTOR OF 1.25 FROM THE TABLE ABOVE DUE TO THICKER SILLS.
13) 7/16" PLY IS ACCEPTABLE IN LIEU OF 7/16" OSB

City of Portland
REVIEWED FOR CODE COMPLIANCE
MAY 23 2012
Permit Number

REGISTERED PROFESSIONAL ENGINEER
51319PE
OREGON
JAN. 12, 1999
DAVID J. HORN
Expires: 6-30-13

HCE
HORN CONSULTING ENGINEERS
13012 SW Bertha Blvd.
Portland, OR 97219
Phone: (503) 892 - 5782
E-mail: dave@hornce.com

CONTRACTOR SHALL VERIFY THAT ALL EXISTING CONDITIONS SHOWN ON THESE PLANS ARE ACCURA WITH ACTUAL FIELD CONDITIONS. ANY DISCREPAN SHOULD BE BROUGHT TO THE ATTENTION OF HCE A SOON AS THEY ARE DISCOVERED.

DISCLAIMER: THE SIGNATURE AND STAMP FOR THESE STRUCTURAL DRAWINGS ARE VALID ONLY WHEN ACCO BY A DEVELOPMENT AND LOT SPECIFIC SET OF STRU CALCULATIONS PREPARED BY HORN CONSULTING EN LLC AND SEALED WITH A WET STAMP AND SIGNATURE ENGINEER WHOSE STAMP APPEARS ON THIS SHEET. CONSTRUCTION SHALL BE PERFORMED ONLY WITH A SET APPROVED BY THE LOCAL JURISDICTION.

WUTZKE RESIDENCE ADU ADDITION
9828 SW 31ST AVE
PORTLAND, OR 97219

STRUCTURAL NOTES / HOLDOWN & SHEAR WALL SCHEDULES

REVISIONS:

DATE:
SCALE:
DRAWN:
JOB NO: MWH

S1

LEGEND

INDICATES DETAIL REFERENCE APPLIES TO ALL SIMILAR LOCATIONS

EXTENT OF SHEARWALL SHEATHING SEGMENT

INDICATES SHEARWALL TYPE PER SCHEDULE SHT L1

INDICATES HOLDOWN TYPE. (1) @ EA END OF WALL SEGMENT PER SCHEDULE SHT L1

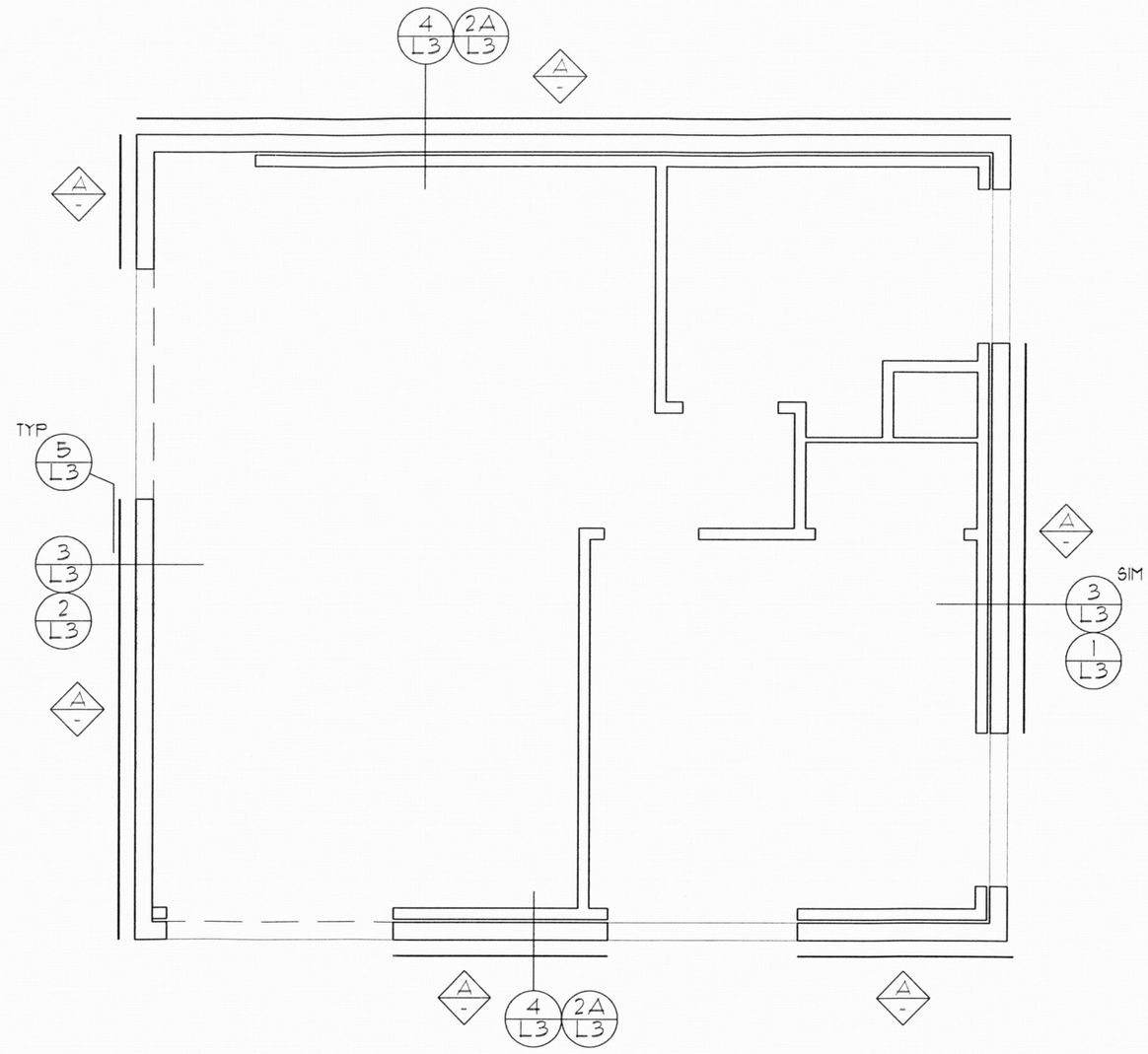

MAIN FLOOR LATERAL PLAN

SCALE: 1/4"=1'-0"

City of Portland
REVIEWED FOR CODE COMPLIANCE
2 3 2012
Permit Number

REGISTERED PROFESSIONAL ENGINEER
51319PE
OREGON
JAN. 12, 1999
DAVID J. HORN

Expires: 6-30-13

HCE
HORN CONSULTING ENGINEERS
1302 SW Bertha Blvd.
Portland, OR 97219
Phone: (503) 892 - 5782
E-mail: dave@hornce.com

CONTRACTOR SHALL VERIFY THAT ALL EXISTING CONDITIONS SHOWN ON THESE PLANS ARE ACCURA WITH ACTUAL FIELD CONDITIONS. ANY DISCREPAN SHOULD BE BROUGHT TO THE ATTENTION OF HCE A SOON AS THEY ARE DISCOVERED.

DISCLAIMER: THE SIGNATURE AND STAMP FOR THESE STRUCTURAL DRAWINGS ARE VALID ONLY WHEN ACCO BY A DEVELOPMENT AND LOT SPECIFIC SET OF STRU CALCULATIONS PREPARED BY HORN CONSULTING EN LLC AND SEALED WITH A WET STAMP AND SIGNATURE ENGINEER WHOSE STAMP APPEARS ON THIS SHEET. CONSTRUCTION SHALL BE PERFORMED ONLY WITH A SET APPROVED BY THE LOCAL JURISDICTION.

WUTZKE RESIDENCE ADU ADDITION
9828 SW 31ST AVE
PORTLAND, OR 97219

MAIN FLOOR LATERAL PLA

REVISIONS:

DATE:	
SCALE:	1/4"
DRAWN:	
JOB NO:	MWH

L2

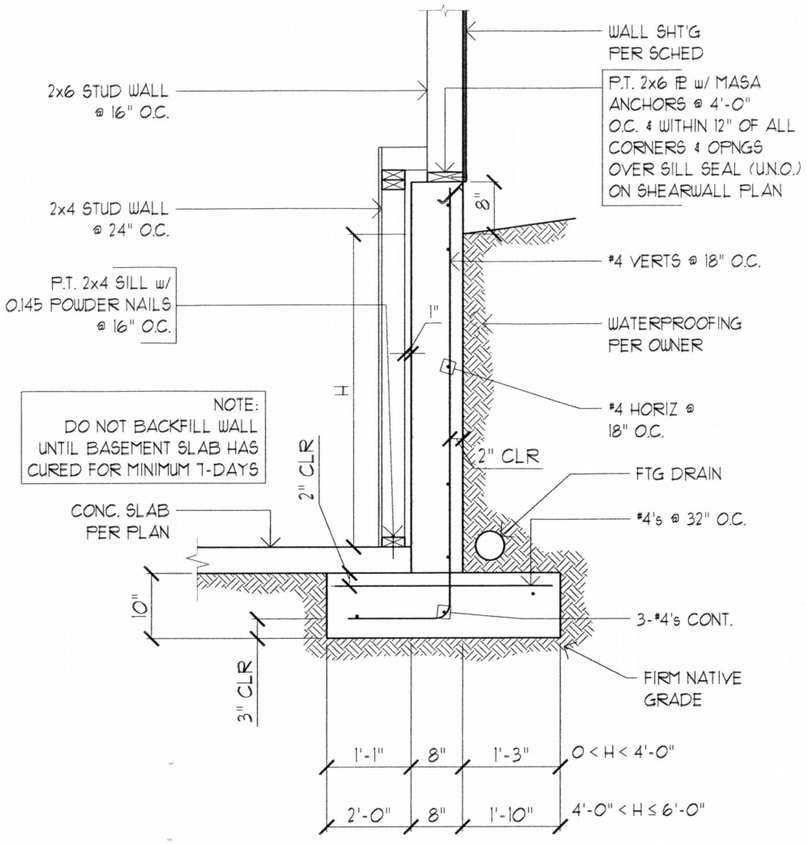

1 RETAINING WALL

SCALE: 1/2"=1'-0"

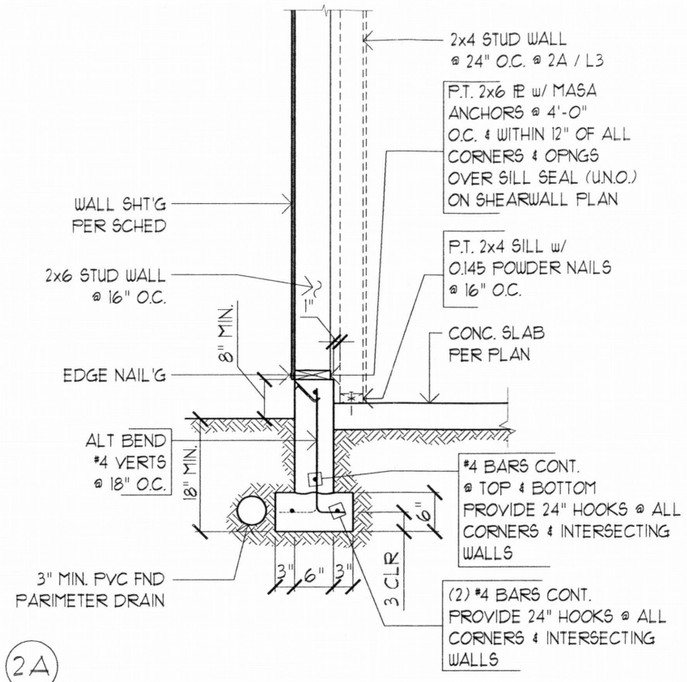

2A 2 TYP FOUNDATION

SCALE: 1/2"=1'-0"

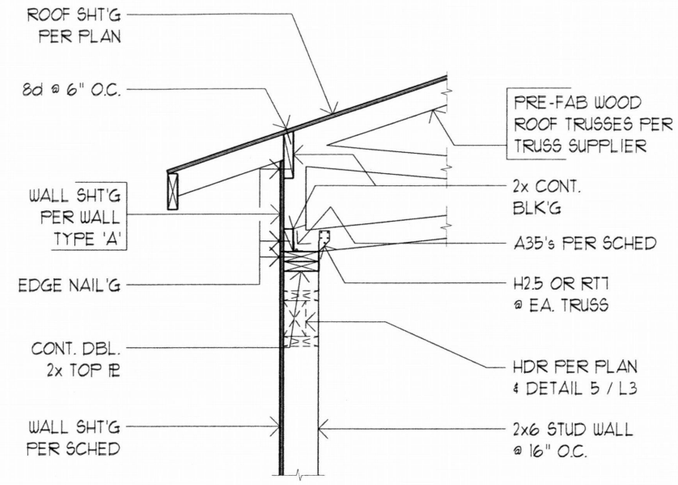

3 ROOF BLK'G @ TRUSSES

SCALE: 1/2"=1'-0"

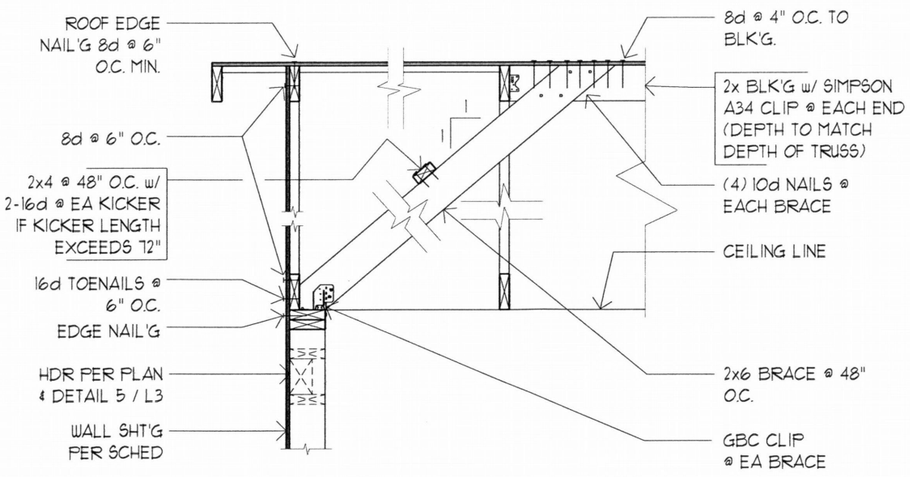

4 PARALLEL TRUSSES TO WALL

SCALE : 1/2" = 1'-0"

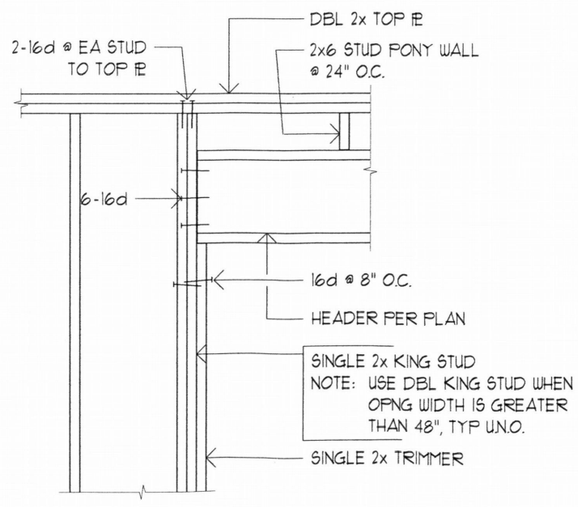

5 TYP HEADER TO SIDE JAMB (U.N.O.)

SCALE: 1/2"=1'-0"

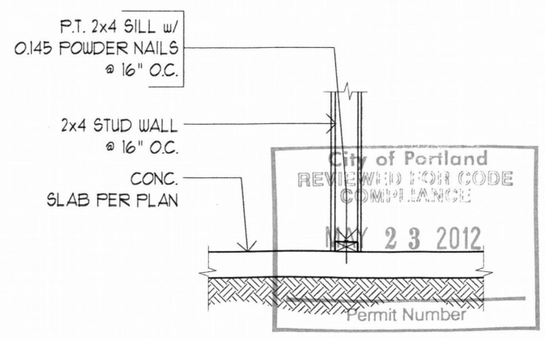

6 NON-BRG PART. WALL / CONC. SLAB

SCALE: 1/2"=1'-0"

REGISTERED PROFESSIONAL ENGINEER
51319PE
OREGON
JAN. 12, 1999
DAVID J. HORN

Expires: 6-30-13

HORN CONSULTING ENGINEERS
1302 SW Bertha Blvd.
Portland, OR 97219
Phone: (503) 892 - 5782
E-mail: dave@hornce.com

CONTRACTOR SHALL VERIFY THAT ALL EXISTING CONDITIONS SHOWN ON THESE PLANS ARE ACCURATE WITH ACTUAL FIELD CONDITIONS. ANY DISCREPANCIES SHOULD BE BROUGHT TO THE ATTENTION OF HCE AS SOON AS THEY ARE DISCOVERED.

DISCLAIMER: THE SIGNATURE AND STAMP FOR THESE STRUCTURAL DRAWINGS ARE VALID ONLY WHEN ACCOMPANIED BY A DEVELOPMENT AND LOT SPECIFIC SET OF STRUCTURAL CALCULATIONS PREPARED BY HORN CONSULTING ENGINEERS LLC AND SEALED WITH A WET STAMP AND SIGNATURE OF ENGINEER WHOSE STAMP APPEARS ON THIS SHEET. CONSTRUCTION SHALL BE PERFORMED ONLY WITH A PERMIT SET APPROVED BY THE LOCAL JURISDICTION.

WUTZKE RESIDENCE ADU ADDITION
9828 SW 31ST AVE
PORTLAND, OR 97219

DETAILS

REVISIONS:

DATE:
SCALE: 1/2"
DRAWN:
JOB NO: MWH

L3

CONNECT to EXISTING SANITARY.
POINT ON PROPERTY WITH BDS plumbing approval.

CONNECT TO EXISTING STORMWATER POINT ON PROPERTY
WITH BDS plumbing approval

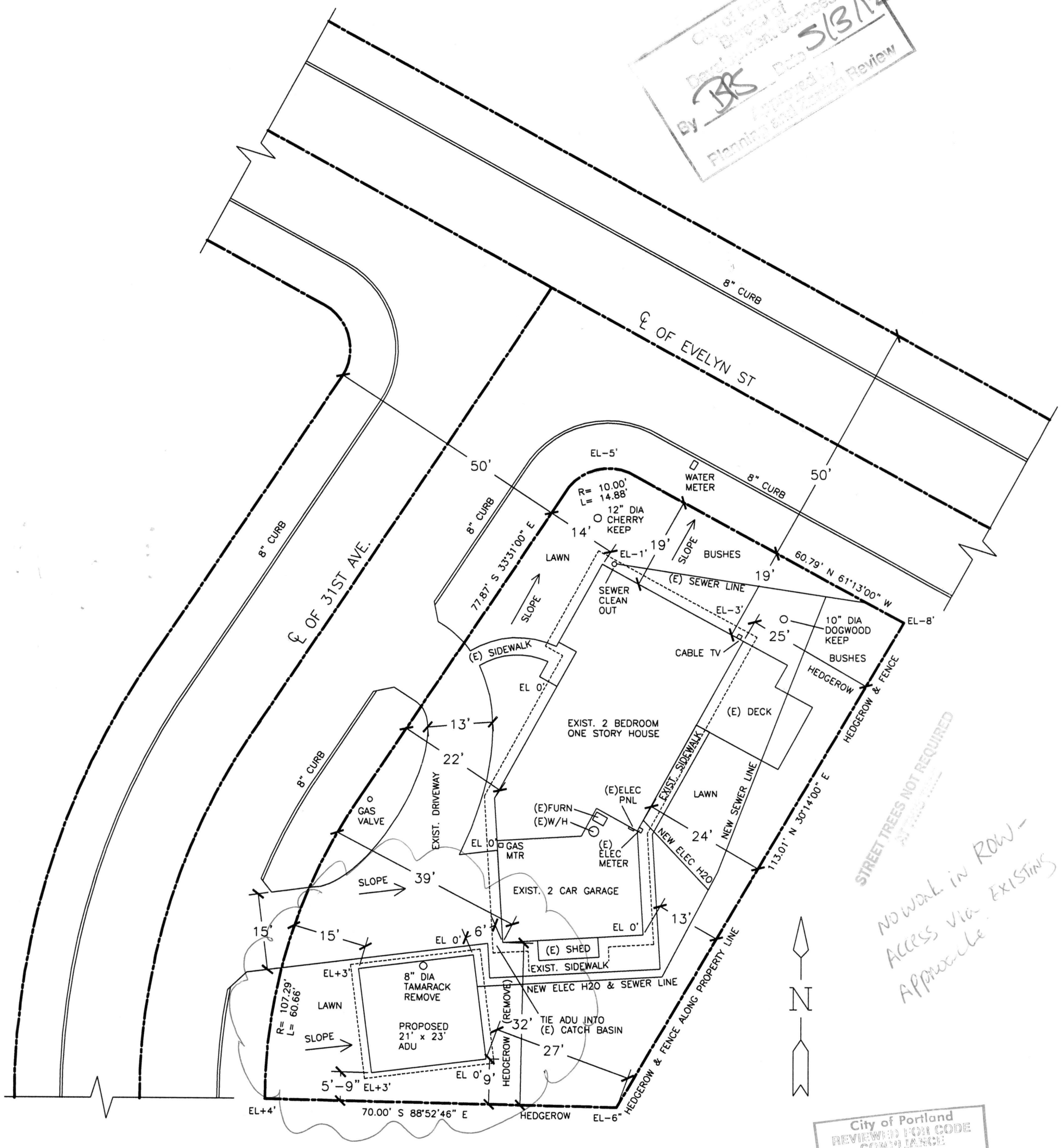

City of Portland
Bureau of Development Services
By BS Date 5/13/12
Approved for Planning and Zoning Review

STREET TREES NOT REQUIRED

NO WORK IN ROW - ACCESS VIA EXISTING APPROACHES

City of Portland
REVIEWED FOR CODE COMPLIANCE
MAY 23 2012
Permit Number

SITE PLAN
SCALE: 1" = 20'

SQ. FT. OF LOT	9,543
SQ. FT. OF EXISTING BLDG.	2,156
SQ. FT. OF PROPOSED BLDG.	483
SQ. FT. OF PAVEMENT	1,698
LOT COVERAGE (BUILDINGS)	28%

MOUNTAINWOOD HOMES POB 2257, BEAVERTON, OR 97075 PH 503-746-7964	NICK & KAREN WUTZKE ADU ADDITION 9828 SW 31ST AVE. PORTLAND, OR 97219 STATE ID # IS IE 29DB 1400	PAGE 1 OF 1

NORTH ELEVATION OF EXISTING HOUSE
SCALE: 1/4" = 1'

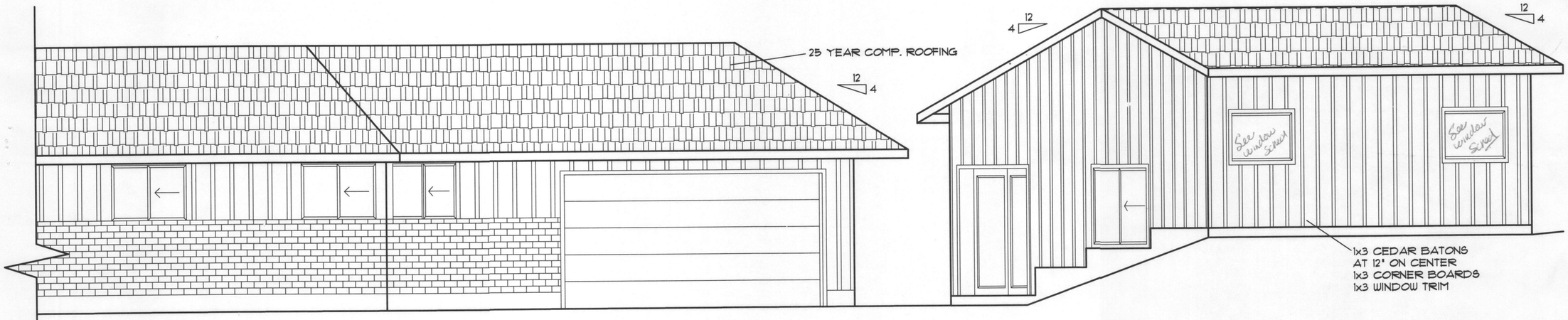

SOUTHERN HALF OF WEST ELEVATION OF EXISTING HOUSE WITH PROPOSED ADU ADDITION
SCALE: 1/4" = 1'

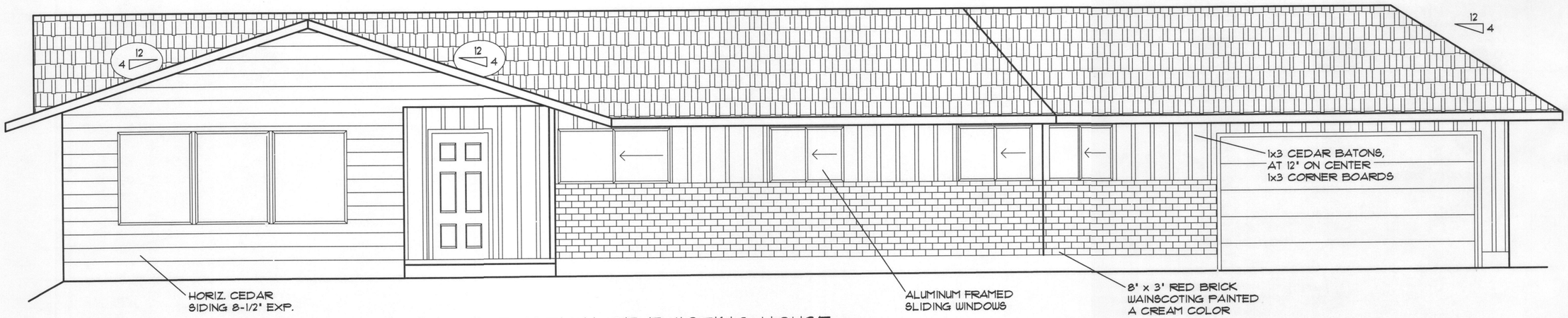

WEST ELEVATION OF EXISTING HOUSE
SCALE: 1/4" = 1'

City of Portland
Bureau of Development Services
By BK Date 5/3/12
Approved by Planning and Zoning Review

General Notes & Supplemental Information
The attached 8½ x 11 sheets are part of this plan approval. Plans are considered null and void without this information attached to the approved set of plans

City of Portland
REVIEWED FOR CODE COMPLIANCE
MAY 23 2012
Permit Number

5/3 @ 3:15

SHEET 1 OF 2

DATE: 04/24/12
SCALE: 1/4" = 1' U.N.O.
DWG NO: WUTZKE-G1

WUTZKE RESIDENCE ADU ADDITION
9828 SW 31ST AVE, PORTLAND, OR 97219

MOUNTAINWOOD HOMES
503-746-7338

Mtn Rd
12-13-2019

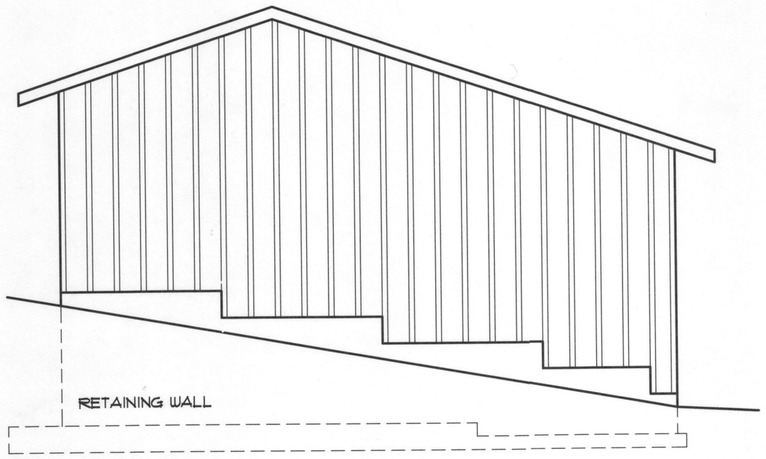

SOUTH ELEVATION
SCALE: 1/4" = 1'

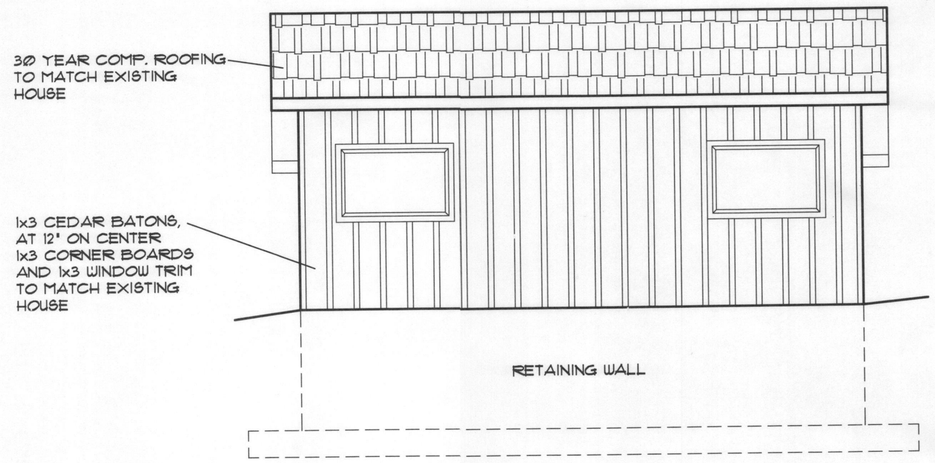

WEST ELEVATION
SCALE: 1/4" = 1'

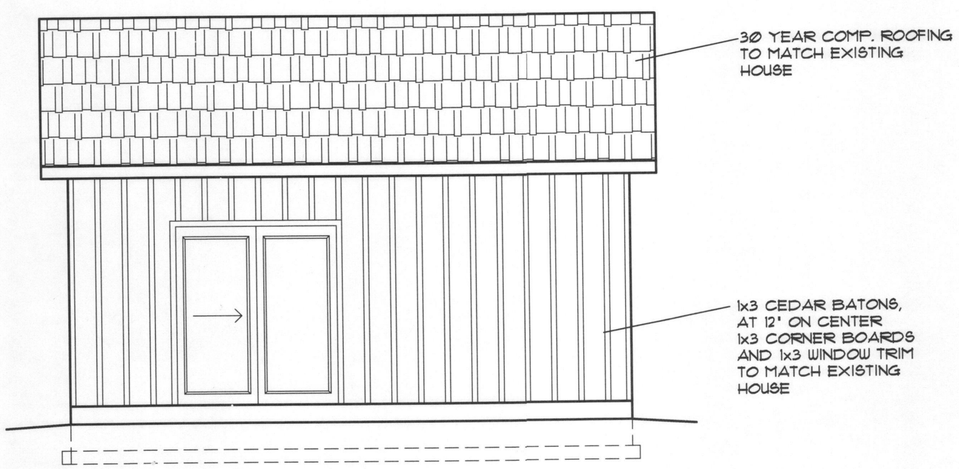

EAST ELEVATION
SCALE: 1/4" = 1'

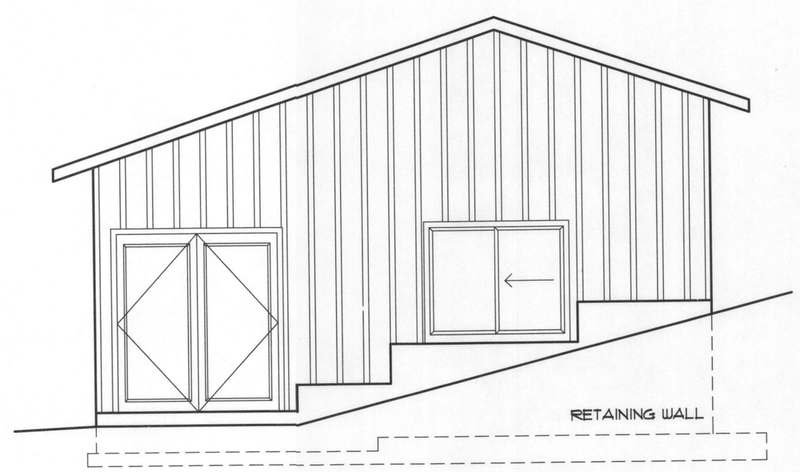

NORTH ELEVATION
SCALE: 1/4" = 1'

City of Portland
REVIEWED FOR CODE COMPLIANCE
MAY 23 2012
Permit Number

SHEET 2 OF 3

DATE: 04/24/12
SCALE: 1/4" = 1' U.N.O.
DWG NO: WUTZKE-G2

WUTZKE RESIDENCE ADU ADDITION
9828 SW 31ST AVE, PORTLAND, OR 97219

MOUNTAINWOOD HOMES
503-746-7338

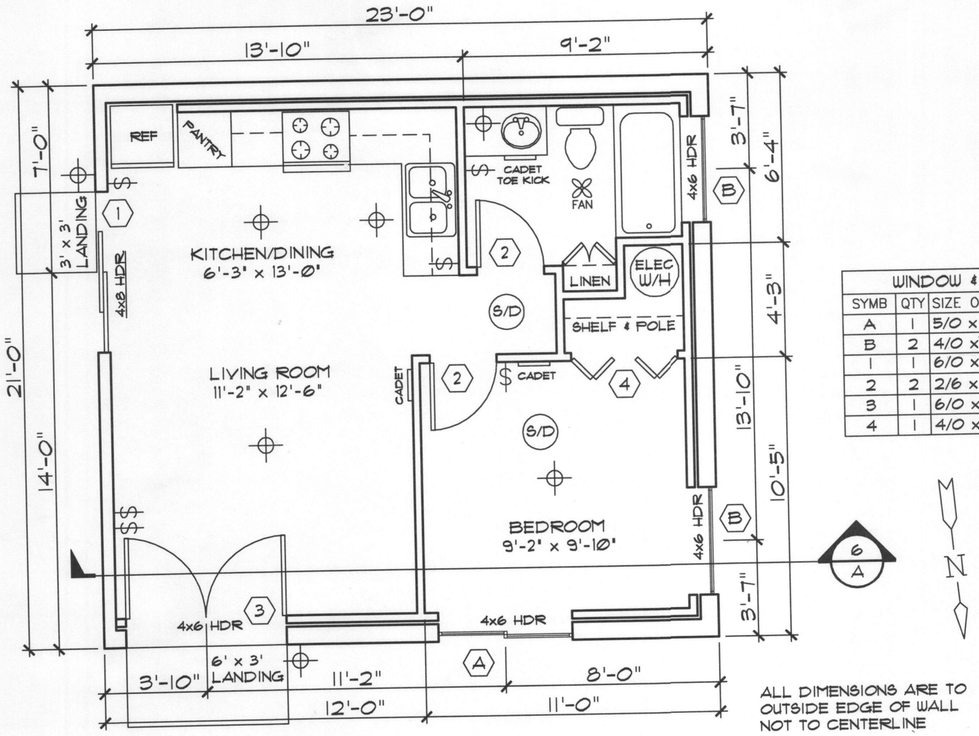

ALL DIMENSIONS ARE TO OUTSIDE EDGE OF WALL NOT TO CENTERLINE

ADDITION FLOOR PLAN

SCALE: 1/4" = 1'

GENERAL NOTES:

1) PROVIDE 1/300 ATTIC VENTILATION.
2) ARCH 80 COMPOSITION ROOF OVER 15# ASPHALT FELT OVER 1/2" CDX PLYWOOD OR 7/16" OSB.
3) PROVIDE R38 INSULATION AT CEILING.
4) EXTERIOR WALLS ARE 2x6 DFL #2 STUDS AT 16" O.C. R21 FIBERGLASS BAT INSULATION, 1/2" CDX PLYWOOD OR 7/16" OSB SHEATHING, TYVEK VAPOR BARRIER

WINDOW & DOOR SCHEDULE

SYMB	QTY	SIZE OR R.O.	DESCRIPTION
A	1	5/0 x 4/0	VINYL SLIDING WINDOW
B	2	4/0 x 3/0	VINYL FIXED WINDOW
1	1	6/0 x 6/8	VINYL SLIDING GLASS DOOR
2	2	2/6 x 6/8	HOLLOW CORE INT. DOOR
3	1	6/0 x 6/8	FULL LITE EXT. DBL. DOOR
4	1	4/0 x 6/8	HC DOUBLE BIFOLD DOOR

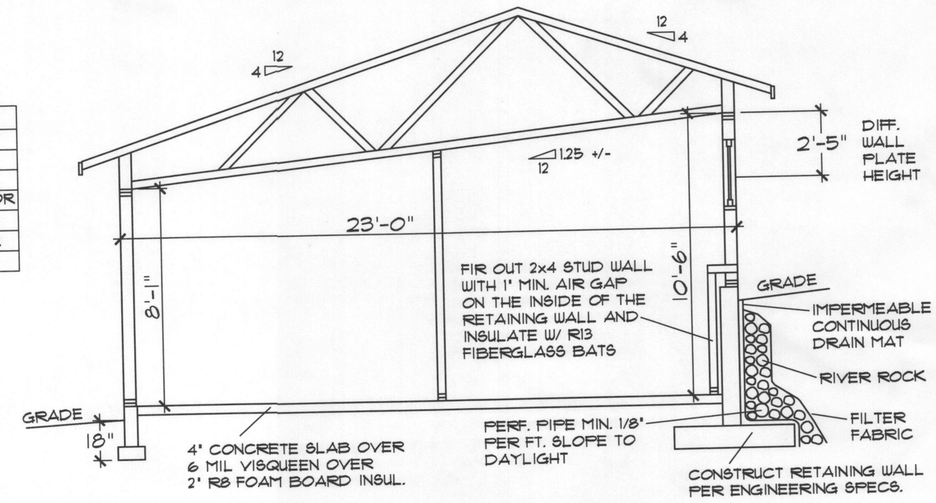

SECTION THRU LIVING ROOM & BED ROOM

SCALE: 1/4" = 1'

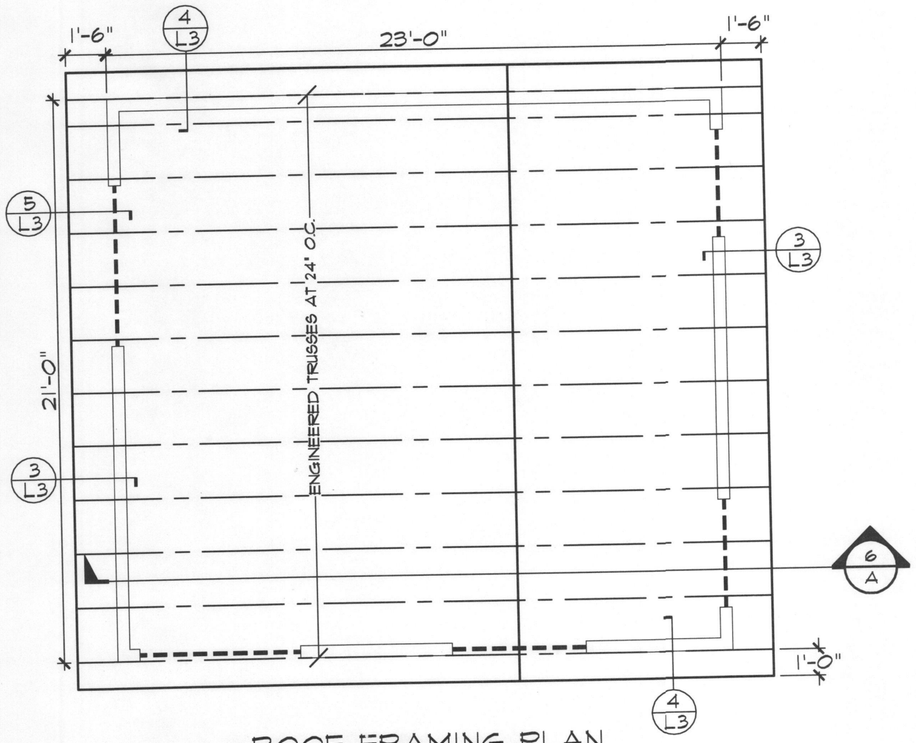

ROOF FRAMING PLAN

SCALE: 1/4" = 1'

- APPENDIX F -
passive depressurization system with 4" gas-permeable layer of aggregate under slab

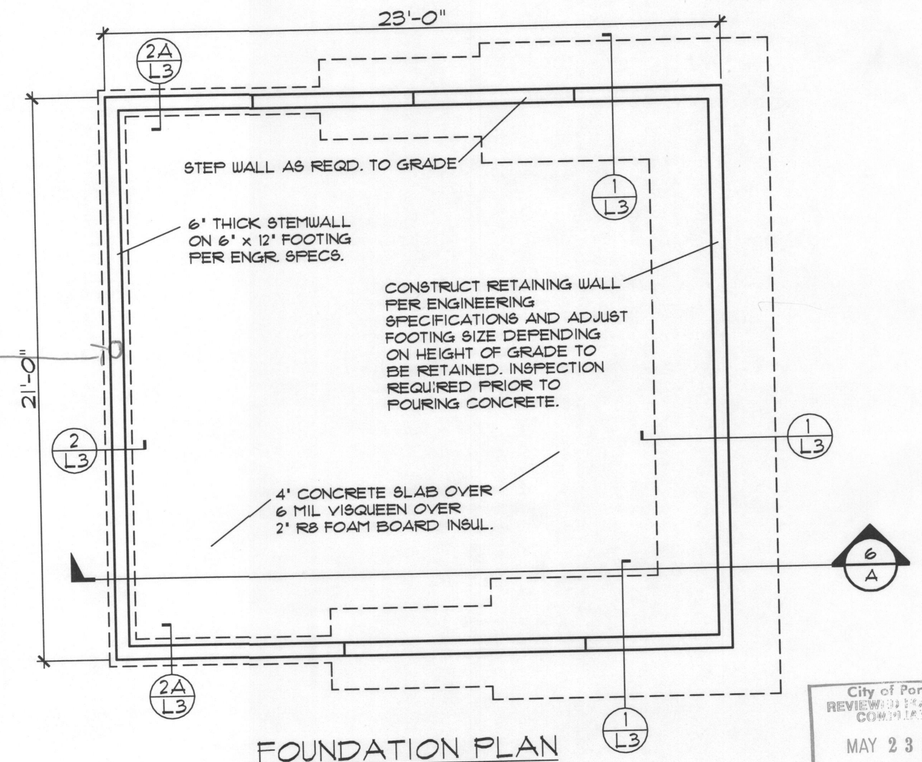

FOUNDATION PLAN

SCALE: 1/4" = 1'

City of Portland
REVIEWED FOR CODE COMPLIANCE
MAY 23 2012
Permit Number

SHEET 3 OF 3

DATE: 04/24/12
SCALE: 1/4" = 1' U.N.O.
DWG NO: WUTZKE-G3

WUTZKE RESIDENCE ADU ADDITION
9828 SW 31ST AVE, PORTLAND, OR 97219

MOUNTAINWOOD HOMES
503-746-7338