# CITY OF PORTLAND, OREGON - BUREAU OF DEVELOPMENT SERVICES

1900 SW Fourth Avenue • Portland, Oregon 97201 • www.portlandonline.com/bds • 503-823-0652 • FAX 503-823-7425

## Facilities Permit Plan Intake Form

**FOR INTAKE, STAFF USE ONLY**

Date Received 5/4/12
Building Registration #
Fixed Bid
Bin # FS
Building Permit # 12-134732
Mechanical # 12-140147-FA
Plumbing Permit #
Electrical Permit #

Building/Mechanical Scott 1
Electrical John
Plumbing
Fire Jeff 2
Planning
BES
PDOT
Structural
Other

**APPLICANT: Complete all sections below that apply to the project. Please print legibly.**

Print Name Janel Lipe Sign Name [signature] 3472192
Street Address 16790 NE Mason Street, Suite 100
City Portland State Oregon Zip Code 97230
Day Phone 503-331-0234 FAX 503.331.6907 email janell@mckinstry.com

**Plans / permits available for pick up at 1900 SW 4th Avenue, 5th floor between 8:00 am to 5:00 pm**

Contact Name for plan/permit pick up Rebecca Wardrobe
Day Phone 503-262-2315 email rebeccaw@mckinstry.com

Project Building Name / # Pioneer Tower 3rd Floor
Project Address or Location 888 SW 5th Ave Suite 300 Portland, OR
Project Name and Description Bullivant - Install (2) exhaust fans in two new shower rooms
McKinstry Job # 70806
Total Project Value 7885.00 Project Reference # 12-134732 (bldg permit)
Building Contractor R+H Construction Co. CCB #
MechanicalContractor Mckinstry Company, LLC CCB # 172811
Electrical Contractor CCB# License #
Plumbing Contractor Mckinstry Company, LLC CCB# License # #37-22PB

☐ **Building Permit**
No. of Stories
Const. Type

[Y] [N] Alarms Required
[Y] [N] Smoke Det. Req'd
[Y] [N] Sprinklers Req'd
[Y] [N] Struct. Eng / Calcs Submitted

☐ **Electrical Permit**
Please provide a completed standard electrical permit application form. You may mail or deliver it to 1900 SW 4th Avenue, Portland, Oregon 97201 or FAX to 503-823-7425.

☐ **Plumbing Permit**
Number of Fixtures
Back Flow Devices
Water Service (# of Feet)
Medical Gas
Other

☒ **Mechanical Permit**
Mechanical Valuation 6935.00
Description Install (2) exhaust fans in two new shower rooms. Tie into existing

CITY OF

# PORTLAND, OREGON

BUREAU OF DEVELOPMENT SERVICES
1900 SW 4th Ave., Suite 5000
Portland, OR 97201

MULTNOMAH COUNTY

## FACILITY PERMIT

**12-140147-000-00-FA**

**Site Address:** **888 SW 5TH AVE**

**Issued:** **5/16/12**

MW-FANS:BULLIVANT TI 3172979:Pioneer Twr:Pioneer PL

| PROJECT INFORMATION | | Occ. Group | Const. Type |
|---|---|---|---|
| **Mechanical** | **Alteration** | | **I-FR** |

Project Description: F5/ SUITE 300 - BULLIVANT BAILEY HOUSER EXISTING TENANT UPGRADES
INSTALL 2 EXHAUST FANS IN SHOWER ROOMS

| | | | |
|---|---|---|---|
| **APPLICANT** | **MCKINSTRY CO LLC *JANEL LIPE*** | Phone | (503) 275-3954 |
| **PROPERTY OWNER** | **PIONEER PLACE LIMITED PARTNERSHIP** | Phone | |
| **CONTRACTOR** | **MCKINSTRY CO LLC** | Phone | |

**Project Details**

| | |
|---|---|
| Building/Mechanical Inspector | BURRISS |
| Electrical Inspector | RISERJ |
| Fire Marshal | GALVANJ |
| Plumbing Inspector | COOKEW |
| Zoning - Property (1) | TBD |

**Project Details**

| | |
|---|---|
| Code Edition (Year) | 2010 OSSC |
| Energy Code Edition | 2010 Oregon Energ |
| Folder Name | FANS |
| Project Reference Number | BULLIVANT 50305 |

**FOR INSPECTION CONTACT Burris,Scott at 503-823-0668**

**This permit expires if, at any time, 180 days pass without an approved inspection. If you are not able to obtain an inspection approval within 180 days, you may request a one-time only extension of 180 days by calling 503-823-5996.**

**BEFORE YOU DIG**

ATTENTION: Oregon law requires you to follow rules adopted by the Oregon Utility Notification Center. Those rules are set forth in OAR 952-001-0010 through OAR 952-001-0090. You may obtain copies of the rules by calling the center. (Note: the telephone number for the Oregon Utility Notification Center is 1-800-332-2344).

**CITY CONTACT**

Phone:

E-Mail:

Fax: (503) 823-7425

**INSPECTION REQUEST PHONE NUMBERS**

**TDD: (503) 823-6868**

**IVR Inspection Request Number:**

**Contact your inspector directly for inspection requests.**

AMERICAN aldes VENTILATION CORPORATION

# A-SERIES DUCT FAN

IN-LINE CENTRIFUGAL FAN FOR RESIDENTIAL OR COMMERCIAL APPLICATIONS

PRODUCT SPECIFICATIONS and ENGINEERING INFORMATION

0710

## ALDES A-SERIES IN-LINE CENTRIFUGAL DUCT FANS

### DESCRIPTION

A centrifugal type exhaust/supply fan specifically designed for moderate size ventilation applications. The fan can be mounted in any angle at any point along the duct work and straight-through air flow design allows easy installation. Fans are rated for both indoor and outdoor use. By using ALDES mounting clamps, fan can easily be removed from duct work for service. Fans are constructed in accordance with standard dimensions for spiral duct (except A12) eliminating the need for transition pieces. Fan motors are capable of operating in air stream temperatures of 140°F. Motor bearings are a permanently sealed, self lubricating ball type. All fans are 100% speed controllable through a decrease in the voltage by using a solid state or transformer type control. A-Series fans are backed by ALDES' Three Year Warranty.

### TYPICAL SPECIFICATIONS FOR ALDES A-SERIES DUCT FANS

Supply, exhaust or return air in-line fans shall be of the centrifugal, direct driven type.

### CONSTRUCTION

Fan housing shall be constructed of heavy gauge galvanized sheet steel. Internal air turning vanes shall be provided for maximum air performance. Capacitor shall be mounted in an enclosure located within the fan housing. Fan shall be supplied with externally mounted electrical terminal box with pre-wired terminal strip connections. Integral disconnect switch shall be provided when specified.

Motorized impeller shall be an external rotor type, class B insulation, totally enclosed with permanent split capacitor. Motor shall be a permanently sealed self lubricating ball bearing type. Motor shall be equipped with automatic reset thermal overload protection. Motor shall be acceptable for continuous duty. Sufficient service factor shall be provided to ensure long maintenance free operation over maximum load conditions.

Fan wheel shall be of the backward inclined centrifugal type with a well designed inlet venturi for maximum performance. Motorized impeller shall be both statically and dynamically balanced as one integral unit to provide for vibration free performance.

### PERFORMANCE

Fan airflow and sound performance shall be tested in accordance with AMCA standards.

### CODE APPROVAL

Fan shall be tested and approved by UL and CSA (or equal) for safety.

A SERIES fans shall be manufactured under the authority of American ALDES Ventilation Corp., Bradenton, FL

WARNING! DO NOT use in HAZARDOUS ENVIRONMENTS where fan's electrical system could provide ignition to combustible or flammable materials unless it is specifically built for hazardous environments. * Measured at 5 feet - freefield conditions. AMERICAN ALDES VENTILATION CORPORATION reserves the right to substitute material or change product specification.

PROJECT: DATE: SUBMITTED BY: ARCHITECT:

CONTRACTOR: ENGINEER:

SPECIFICATION

| FAN POS. | MODEL NO. | CFM | IN W.G. | RPM | WATTS/HP | AMPS | dB(A)* | SONES | QTY. | OPTIONAL EQUIP. |
|---|---|---|---|---|---|---|---|---|---|---|
| | | | | | | | | | | |

# DIMENSIONAL DATA

| Part# | Model# | A | B | C | D | E |
|---|---|---|---|---|---|---|
| 99 029 | A-4 | 4" | 8 3/4" | 6 1/2" | 1" | 1" |
| 99 040 | A-4HP | 4" | 9 3/4" | 6 15/16" | 1" | 1" |
| 99 010 | A-5 | 5" | 8 3/4" | 5 1/2" | 1" | 7/8" |
| 99 042 | A-5HP | 5" | 9 3/4" | 5 15/16" | 1" | 1" |
| 99 011 | A-6 | 6" | 11 3/8" | 6" | 1" | 1" |
| 99 041 | A-6HP | 6" | 13 1/8" | 6 5/8" | 1" | 1 1/8" |
| 99 012 | A-8 | 8" | 13 3/8" | 6" | 1 1/8" | 1 1/8" |
| 99 013 | A-8HP | 8" | 13 3/8" | 6" | 1 1/8" | 7/8" |
| 99 014 | A-10 | 10" | 13 3/8" | 4 11/16" | 1 1/8" | 1" |
| 99 039 | A-10HP | 10" | 13 3/8" | 5 7/8" | 1 1/8" | 1" |
| 99 015 | A-12 | 12" | 16" | 8 1/4" | 1 1/16" | 1 3/16" |
| 99 038 | A-12HP | 12" | 16" | 8 1/4" | 1 1/16" | 1 3/16" |

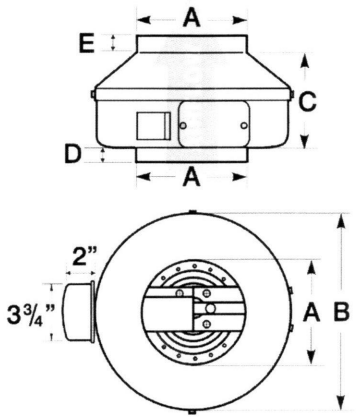


UL LISTED
DUCT FANS
(E77545)

# AIR PERFORMANCE DATA

| Part No. | MODEL | Duct Diam. (in.) | MAX. RPM | MAX. AMPS | RATED WATTS | CFM vs. Static Pressure in inches W.G. 0" | 0.1" | 0.2" | 0.4" | 0.6" | 0.8" | 1.0" | 1.25 | 1.5" | 2.0" | 2.5" | MAX PS. (IN.) |
|---|---|---|---|---|---|---|---|---|---|---|---|---|---|---|---|---|---|
| 99 029 | A-4 | 4 | 3000 | 0.19 | 20 | 135 | 123 | 110 | 83 | 55 | 25 | — | — | — | — | — | 0.94 |
| 99 040 | A-4HP | 4 | 2750 | 0.66 | 71 | 170 | 160 | 150 | 134 | 119 | 103 | 86 | 63 | 40 | — | — | 1.98 |
| 99 010 | A-5 | 5 | 3000 | 0.19 | 20 | 156 | 143 | 130 | 99 | 66 | 33 | — | — | — | — | — | 0.99 |
| 99 042 | A-5HP | 5 | 2700 | 0.68 | 73 | 220 | 205 | 190 | 160 | 135 | 112 | 91 | 66 | 41 | — | — | 1.89 |
| 99 011 | A-6 | 6 | 2700 | 0.68 | 72 | 303 | 287 | 270 | 232 | 196 | 164 | 134 | 97 | 58 | — | — | 1.88 |
| 99 041 | A-6HP | 6 | 2900 | 1.48 | 153 | 483 | 466 | 450 | 409 | 369 | 329 | 289 | 243 | 201 | 103 | — | 2.41 |
| 99 012 | A-8 | 8 | 2550 | 1.14 | 119 | 461 | 435 | 410 | 351 | 295 | 243 | 191 | 143 | 97 | — | — | 2.11 |
| 99 013 | A-8HP | 8 | 2950 | 1.45 | 142 | 502 | 486 | 470 | 428 | 388 | 351 | 313 | 266 | 218 | 100 | — | 2.40 |
| 99 014 | A-10 | 10 | 3000 | 1.43 | 138 | 513 | 497 | 480 | 444 | 407 | 366 | 324 | 269 | 216 | 89 | — | 2.36 |
| 99 039 | A-10HP | 10 | 3100 | 1.96 | 196 | 589 | 574 | 560 | 531 | 503 | 472 | 441 | 400 | 355 | 257 | 137 | 3.02 |
| 99 015 | A-12 | 12 | 2600 | 1.87 | 181 | 741 | 711 | 680 | 601 | 515 | 434 | 363 | 290 | 236 | 146 | 72 | 2.99 |
| 99 038 | A-12HP | 12 | 2900 | 3.01 | 301 | 940 | 910 | 880 | 819 | 746 | 670 | 596 | 505 | 425 | 259 | 80 | 2.74 |

Ratings shown are based on tests made in accordance with AMCA Standard 210 and AMCA Standard 300 and comply with the requirements of the AMCA Certified Ratings Program. All fans use energy efficient permanent split capacitor motor. Voltage 120.

# SOUND DATA

| Part No. | MODEL | (in.) | Sones at Given Static Pressure 0" | .125" | .25" | .375" | .5" | .75" | 1.0" | 1.25" | 1.5" |
|---|---|---|---|---|---|---|---|---|---|---|---|
| 99 029 | A-4 | 4 | 4.5 | 4.2 | 4.0 | 3.8 | 3.8 | — | — | — | — |
| 99 040 | A-4HP | 4 | 6.5 | 6.7 | 6.9 | 7.3 | 7.7 | 8.1 | 8.3 | 8.4 | — |
| 99 010 | A-5 | 5 | 4.8 | 4.3 | 4.1 | 4.0 | 3.9 | — | — | — | — |
| 99 042 | A-5HP | 5 | 6.8 | 6.9 | 7.0 | 7.3 | 7.7 | 8.5 | 8.6 | 8.7 | — |
| 99 011 | A-6 | 6 | 6.7 | 6.5 | 6.5 | 6.4 | 6.3 | 6.2 | 6.6 | 7.1 | — |
| 99 041 | A-6HP | 6 | 10.8 | 10.8 | 10.8 | 10.8 | 10.7 | 10.2 | 10.0 | 9.7 | 9.8 |
| 99 012 | A-8 | 8 | 9.1 | 8.4 | 7.7 | 7.3 | 7.1 | 7.3 | 7.6 | 8.0 | 8.6 |
| 99 013 | A-8HP | 8 | 11.4 | 10.9 | 10.5 | 10.0 | 9.7 | 9.3 | 9.8 | 10.2 | 10.6 |
| 99 014 | A-10 | 10 | 12.3 | 11.8 | 11.3 | 10.9 | 10.6 | 9.8 | 9.4 | 9.2 | 9.3 |
| 99 039 | A-10HP | 10 | 12.7 | 12.4 | 12.1 | 11.9 | 11.6 | 11.1 | 10.7 | 10.4 | 10.3 |
| 99 015 | A-12 | 12 | 11.5 | 10.4 | 9.5 | 8.8 | 7.3 | 6.1 | 7.2 | 8.0 | 8.8 |
| 99 038 | A-12HP | 12 | — | — | — | — | 21.0 | 21.0 | 20.0 | 19.2 | 18.3 |

The sound ratings shown are loudness values in fan sones at 5 ft. (1.5m) from the test inlet duct in a hemi **spherical free field calculated per AMCA Standard 301. Values shown are for installations Type D: ducted** inlet, ducted outlet. Ratings do not include the effect of duct and correction.


AMERICAN aldes VENTILATION CORPORATION

4521 19th Street Court E., Suite 104, Bradenton, FL 34203 USA
Phone: 941-351-3441 | Fax: 941-351-3442
www.americanaldes.com | E-mail: info@aldes-us.com



IAQ VENTILATION HOTLINE 800-255-7749

S.W. YAMHILL STREET

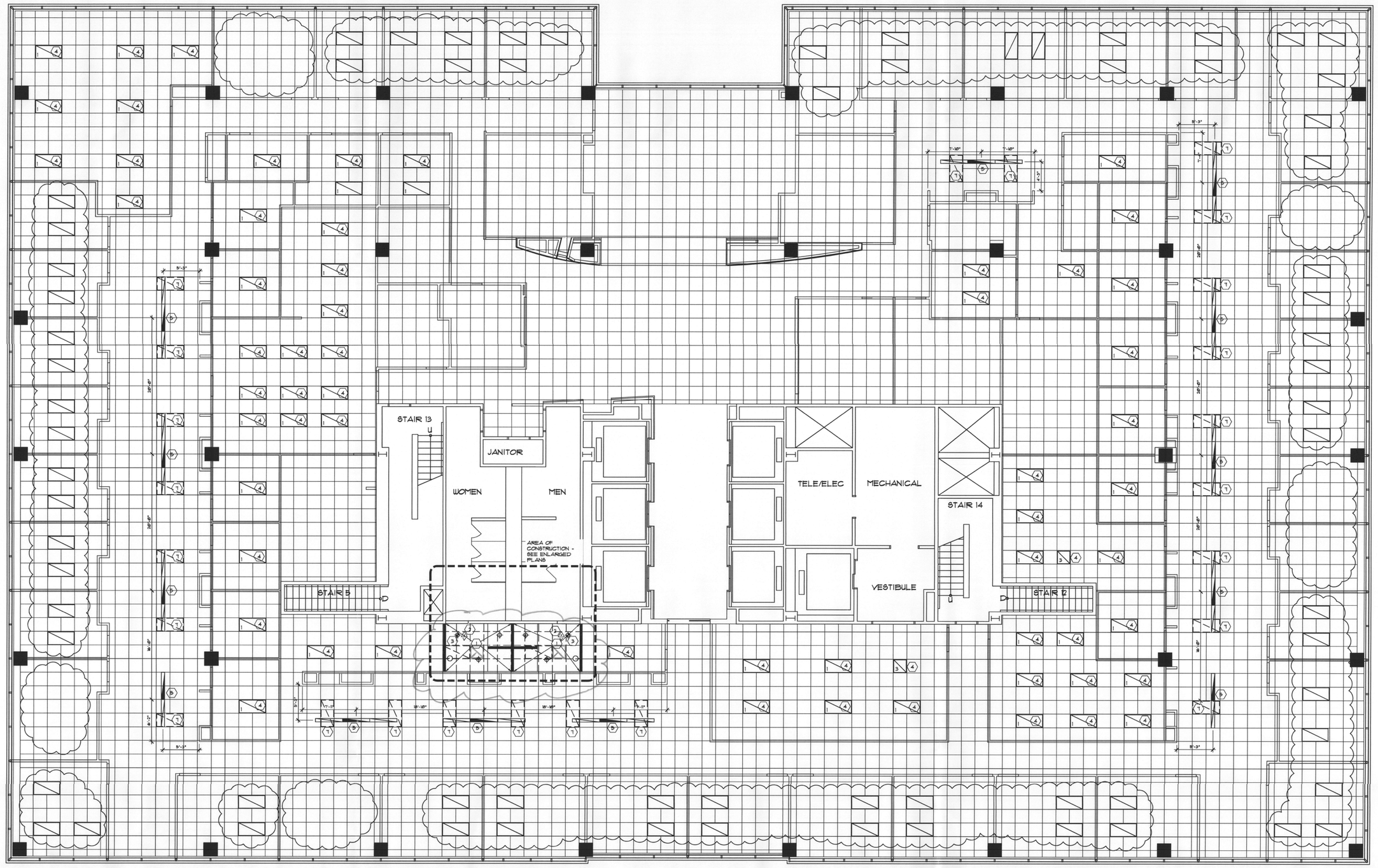


S.W. TAYLOR STREET

## B1 REFLECTED CEILING PLAN

SCALE: 1/8"=1'-0"

SCOPE:
(2) NEW EXHAUST FANS ON TIMER DUCTED TO BUILDING EXHAUST DUCT.

## GENERAL CEILING NOTES

1. MECHANICAL SUBCONTRACTOR TO PROVIDE BALANCE TESTING AND REPORT TO BUILDING MANAGEMENT.
2. CONTRACTOR TO PROVIDE BUILDING MANAGEMENT WITH AS-BUILT DRAWINGS AT COMPLETION OF THE PROJECT.
3. ALL MULTIPLE SWITCH LOCATIONS SHALL BE GROUPED TOGETHER. LOCATE THERMOSTATS ADJACENT TO WALL SWITCHES WHERE POSSIBLE.
4. RESWITCH LIGHT FIXTURES AS SHOWN FOR NEW ROOM CONFIGURATIONS WITH REQUIREMENTS OF CITY OF PORTLAND FIRE MARSHAL.
5. ANY WALL OR CEILING MOUNTED DEVICES OR CONTROLS REQUIRED BUT NOT SHOWN ON THIS DRAWING ARE TO BE REVIEWED WITH DESIGNER PRIOR TO INSTALLATION.
6. LIGHT FIXTURES, EXIT SIGNS, AND ITEMS SHOWN DASHED OR NOTED ARE TO BE REMOVED AND RELOCATED. REUSABLE MATERIALS ARE TO BE RETURNED TO BUILDING STOCK.
7. RELOCATE EXISTING SPRINKLERS AS REQUIRED.
8. EMERGENCY LIGHTING TO BE INSTALLED AS INDICATED ON REFLECTED CEILING PLAN. PROVIDE ONE (1) FOOT-CANDLE ALONG PATH OF EGRESS. EMERGENCY LIGHTS TO BE CONNECTED TO BUILDING EMERGENCY POWER SYSTEM.
9. PROVIDE NEW BUILDING STANDARD CEILING T-BAR GRID AND TILE IN AREAS INDICATED. REPLACE CEILING TILE DAMAGED DURING CONSTRUCTION.
10. VISUAL FIRE ALARMS ARE TO BE BUILDING STANDARD AND CEILING MOUNTED. CONNECT TO BUILDING FIRE/LIFE SAFETY SYSTEM. STROBES ON EACH FLOOR ARE TO FLASH IN SYNC.
11. ~~SHOWER ROOMS 423 AND 425 - PROVIDE NEW 5/8" TYPE "X" GYP BD CEILING. REMOVE EXISTING T-BAR GRID CEILING.~~
12. BREAK-OUT LIGHTING FIXTURE PRICING AS FOLLOWS:
    1. PENDANT FIXTURES IN SECRETARIAL AREAS AND COMMON HALLWAYS
    2. 2X4 LIGHTING FIXTURE RETROFIT IN INTERIOR PRIVATE OFFICES, WORK AREAS AND LUNCH ROOM
13. REVIEW HVAC IN CONFERENCE ROOM 3-F. PROVIDE INDEPENDENT HEATING/COOLING AND CONTROLS.

## CEILING KEY NOTES

1. NEW GYP BD CEILING W/ PAINTED FINISH
2. NEW CEILING MOUNTED VISUAL STROBE. CONNECT TO BUILDING EMERGENCY SYSTEM. ALL STROBES ON THE FLOOR TO FLASH IN UNISON.
3. NEW BLDG STD RECESSED FLUORESCENT FIXTURE ON EMERGENCY CIRCUIT.
4. RETROFIT EXISTING BUILDING STANDARD FLUORESCENT FIXTURE WITH LED RELITE KIT
5. ~~NEW PENDANT FIXTURE~~
6. NOT USED
7. REMOVE EXISTING 2X4 FIXTURE AND RETURN TO BUILDING STOCK

## LIGHT FIXTURE SCHEDULE

| | | |
|---|---|---|
| 1 | TYPE 1 | EXISTING 2X4 LIGHT FIXTURE WITH LED RETROFIT, ABL-LITHONIA LIGHTING, REALIZE RELITE *RTL4R 43L D5Ø LP835 NX |
| 2 | TYPE 2 | EXISTING 2X4 LIGHT FIXTURE WITH LED RETROFIT ON EMERGENCY CIRCUIT, ABL-LITHONIA LIGHTING, REALIZE RELITE *RTL4R 43L D5Ø LP835 NX |
| 3 | TYPE 3 | EXISTING 2X2 LIGHT FIXTURE WITH LED RETROFIT, ABL-LITHONIA LIGHTING, REALIZE RELITE *RTL2R 32L D4Ø LP835 NX |
| 4 | TYPE 4 | ABL-PEERLESS, CONTRAIL PENDANT FIXTURE, 12' FIXTURE W/ (2) T5HO LAMPS, *CLMS 2 54T5HO COA 12FT R4 12Ø GEB1Ø SCT LP835 FI/4Ø ACG |
| 5 | TYPE 5 | ABL-PEERLESS, CONTRAIL PENDANT FIXTURE, 8' FIXTURE W/ (2) T5HO LAMPS, *CLMS 2 54T5HO COA 8FT R8 12Ø GEB1Ø SCT LP835 FI/4Ø ACG |
| 6 | TYPE 6 | ABL-PEERLESS, CONTRAIL PENDANT FIXTURE ON EMERGENCY CIRCUIT, 12' FIXTURE W/ (2) T5HO LAMPS, *CLMS 2 54T5HO COA 12FT R4 12Ø GEB1Ø SCT LP835 FI/4Ø ACG |
| 7 | TYPE 7 | ABL-PEERLESS, CONTRAIL PENDANT FIXTURE ON EMERGENCY CIRCUIT, 8' FIXTURE W/ (2) T5HO LAMPS, *CLMS 2 54T5HO COA 8FT R8 12Ø GEB1Ø SCT LP835 FI/4Ø ACG |
| 8 | TYPE 8 | BUILDING STANDARD RECESSED COMPACT FLUORESCENT DOWN LIGHT. |
| 9 | TYPE 9 | BUILDING STANDARD RECESSED COMPACT FLUORESCENT DOWN LIGHT FIXTURE ON EMERGENCY CIRCUIT. |
| 10 | TYPE 10 | NEW WALL-MOUNT VANITY FIXTURE. FIXTURE TO BE SELECTED |

City of Portland
REVIEWED FOR CODE COMPLIANCE
MAY 16 2012
12-140147-FA
Permit Number

## LEGEND

- 2 HOUR RATED PARTITION
- 1 HOUR RATED PARTITION
- NEW STANDARD BUILDING PARTITION
- EXISTING WALL TO REMAIN
- LOW HEIGHT PARTITION
- WALL TO BE REMOVED
- P — WALL TYPE TAG
- 101 OFFICE / CPT-1 — ROOM NO. & NAME / FLOOR FINISH
- 101 — DOOR NUMBER
- A 36"W — RELITE TAG
- WC-1 — WALL FINISH
- P — WINDOW COVERING PULL DIRECTION
- N.I.C. — ITEM NOT IN CONTRACT
- 1 — KEY NOTE
- 1 / 101 — ELEVATION TAG
- 1 / 101 — DETAIL BUBBLE
- 1 / 101 — SECTION
- 1 — 1/1/07 — REVISION CLOUD / REVISION NO. & DATE
- 1 — EQUIPMENT TAG
- A — DUPLEX OUTLET
- A/D — DEDICATED DUPLEX OUTLET
- A — FOURPLEX OUTLET
- A — TELEPHONE/ DATA
- A — SPECIAL PURPOSE OUTLET
- A — FLUSH FLOOR MONUMENT W/ SERVICES SHOWN
- A — FLOOR MONUMENT W/ SERVICES SHOWN
- A — BASE FEED WALL MOUNTED
- A — BASE FEED FLOOR MOUNTED
- PP — POWER POLE
- T — THERMOSTAT
- FE — FIRE EXTINGUISHER
- FIRE ALARM PULL STATION
- J — JUNCTION BOX
- a — LIGHT SWITCH
- 3 a — 3-WAY LIGHT SWITCH
- D a — LIGHT SWITCH W/ DIMMER
- F a — LIGHT SWITCH W/ FAN
- U — UNDER COUNTER LIGHT PROVIDE JUNCTION BOX
- S — SMOKE DETECTOR
- 1a — 2 X 2 LIGHT FIXTURE TYPE & SWITCH
- 1a — 2 X 4 LIGHT FIXTURE TYPE & SWITCH
- 1a — 1 X 4 LIGHT FIXTURE TYPE & SWITCH
- 1 — 2 X 2 24-HR LIGHT FIXTURE TYPE
- 1 — 2 X 4 24-HR LIGHT FIXTURE TYPE
- 1 — 1 X 4 24-HR LIGHT FIXTURE TYPE
- 1a — RECESSED LIGHT FIXTURE TYPE & SWITCH
- 1 — RECESSED 24-HR FIXTURE TYPE
- WALL WASHER PROVIDE JUNCTION BOX
- SCONCE TYPE & SWITCH
- PENDANT TYPE & SWITCH
- AR — AIR RETURN
- AS — AIR SUPPLY
- LINEAR SLOT DIFFUSER
- SPRINKLER
- R — SPRINKLER TO BE RELOCATED
- H — HORN STROBE
- V — VISUAL ALARM
- EXIT SIGN
- FAN

## KEY PLAN

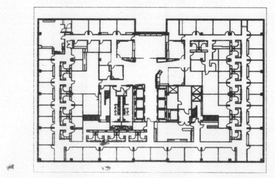


TATHWELLDESIGN-ASSOCIATES
INTERIOR DESIGN & SPACE PLANNING
10615 SW Oriole Circle, Beaverton, OR 97007
T 503 290 4991


PIONEER TOWER
888 S.W. FIFTH AVENUE
PORTLAND, OR 97204

BULLIVANT BAILEY HOUSER
PIONEER TOWER, SUITE 300
888 SW FIFTH AVENUE
PORTLAND, OREGON
REFLECTED CEILING PLAN

| REVISIONS: | |
|---|---|
| LIGHTING REVS | 03.23.12 |
| AD2 | 04.13.12 |
| DATE: | 03.15.12 |
| CHECK: | JMT |
| DRAWN BY: | JMT |
| PROJECT NO.: | 12200 |

T3.2

Copyright © 2012 Tathwell Design Assoc.

12200_Bullivant_Cd03.dwg

1/15/2004

2

12-140147-FA

F5