# MECHANICAL PERMIT APPLICATION

**City of Portland, Oregon - Bureau of Development Services**

1900 SW 4th Avenue, Portland, Oregon 97201 • 503-823-7363 • TTY 503-823-6868 • www.portlandoregon.gov/bds

**Type of work**

☑ New construction ☑ Addition/alteration/replacement

☐ Demolition ☐ Other:

**Category of construction**

☐ 1 & 2 family dwelling ☑ Commercial/industrial ☐ Accessory building

☐ Multifamily ☐ Master builder ☐ Other:

**Job site information and location**

Job no.: Job address: 235 NW PARK

City/State/ZIP:

Suite/bldg./apt. no.: Project name: Lemon Hotel / ACME

Cross street/directions to job site:

Subdivision: Lot no. Tax map/parcel no.

**Description of work (example: upstairs bath fan/dryer exhaust)**

INSTALL 3 BATH UNITS, 2 DUCT SPLIT 2 EXHAUST FAN, 1 - UNIT HEATER DUCT / GRILLS.

☐ Reference RS / Combination Permit no.

**☐ Property owner ☐ Tenant**

Name:

Address:

City/State/ZIP:

Phone: FAX:

**Owner installation:** This installation is being made on property that I own, which is not intended for sale, lease, rent, or exchange.

Owner signature: Date:

**☒ Contractor ☐ Subcontractor**

Business name: Arjae Sheet Metal Co. Inc

Address: 5510 SE McLoughlin Ave

City/State/ZIP: Portland Oregon 97202

Phone: 503-231-7717 FAX: 503-230-4888

Lic. no. CCB lic. no. 60835

Authorized signature: Heath Burmeister 3-28/12

Print name: Date:

**☐ Applicant ☐ Contact Person**

Business name:

Contact name: Heath Burmeister

Address: 5510 SE McLoughlin Ave

City/State/ZIP: Portland Oregon 97202

Phone: 503-231-7717 FAX: 503-230-4888

E-mail: heath@arjae.com

RS Permit/No Fees Due ☐

**Sub-contractor information can be faxed to 503-823-7693.**

This permit application expires if a permit is not obtained within 180 days after it has been accepted as complete.

**Commercial Fee Schedule - Use Checklist**

Mechanical permit fees* are based on the value of the work performed. Indicate the value (rounded to the nearest dollar of all mechanical materials, equipment, labor, overhead and profit.

Value: $ 61,000.

**Residential Equipment / Systems Fees**

*For special information use checklist*

| Description | Qty. | Fee | Total |
|---|---|---|---|
| **Heating / cooling** | | | |
| Air conditioner (site plan required) | | $ 23 | |
| Furnace / burner including duct work / vent / liner | | $ 48 | |
| Heat pump (site plan required) | | $ 45 | |
| Air handling unit | | $ 23 | |
| Hydronic hot water system | | $ 28 | |
| Residential boiler (radiator or hydronic) includes piping | | $ 28 | |
| Unit heaters (fuel type, not electric) in-wall, in-duct, suspended, etc. | | $ 23 | |
| Vent for appliance other than furnace | | $ 19 | |
| Alteration of existing HVAC system | | $ 28 | |
| **Other fuel appliances** | | | |
| Decorative gas fireplace | | $ 23 | |
| Flue vent for water heater or gas fireplace | | $ 19 | |
| Wood / pellet stove | | $ 50 | |
| Gas or wood fireplace / insert | | $ 50 | |
| Chimney / liner / flue / vent | | $ 19 | |
| Other: | | $ 28 | |
| **Environmental exhaust and ventilation** | | | |
| Range hood / other kitchen equipment | | $ 12 | |
| Clothes dryer exhaust | | $ 12 | |
| Single-duct exhaust (bathrooms, toilet compartments, utility rooms) | | $ 12 | |
| Attic / crawl space fans | | $ 12 | |
| Other: | | $ 28 | |
| **Gas fuel piping** | | | |
| $13 for the first four, $2.38 for each additional. Please indicate number of fuel gas piping outlets below: | | | |
| Furnace, etc. | | | |
| Gas heat pump | | | |
| Wall / suspended / unit heater | | | |
| Water heater / boiler | | | |
| Fireplace | | | |
| Range | | | |
| Barbecue | | | |
| Clothes dryer | | | |
| Other: | | | |
| **Other appliances** | | | |
| Including oil tanks, gas and diesel generators, gas and electric kilns, gas appliances / equipment not included above | | $ 28 | |
| **Mechanical permit fees** | | | |
| Subtotal | | | |
| Minimum permit fee ($70) | | | |
| Commercial plan review (60% of permit fee) | | | |
| State surcharge (12% of permit fee) | | | |
| **TOTAL PERMIT FEE** | | | |

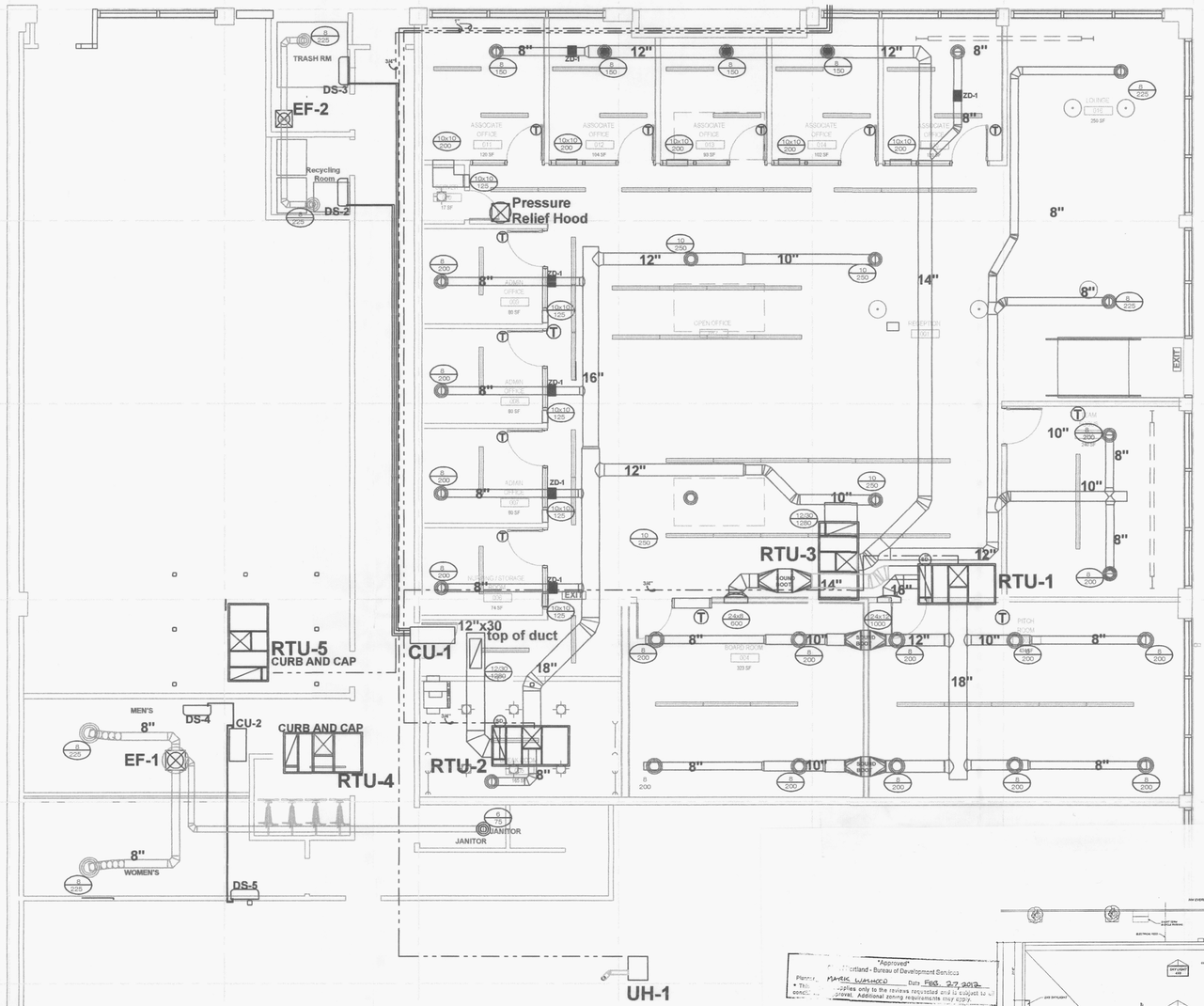


HVAC Floor Plan
3/16" = 1'0"

# EQUIPMENT SHEDULE

| Unit Number | Model | Tons | CFM | SP | COOLING BTU | HEATING Input | HEATING Output | OSA | WEIGHT | MCA | MOCP | Voltage | NOTES |
|---|---|---|---|---|---|---|---|---|---|---|---|---|---|
| RTU-1 | LENNOX KGA060S4D | 5 | 2000 | 1.0 | 60K | 65K | 58 K | 400 | 601 | -- | -- | 230/3 | 1,2,3 |
| RTU-2 | LENNOX KGA060S4D | 5 | 2000 | 1.0 | 60K | 65K | 58K | 400 | 601 | -- | -- | 230/3 | 1,2,3 |
| RTU-3 | LENNOX KGA048S4D | 4 | 1600 | 1.0 | 48000 | 105K | 84K | 320 | 667 | 23 | 35 | 230/3 | 1,2,3 |
| RTU-4 | LENNOX Curb Only | 7.5 | -- | -- | -- | -- | -- | --- | -- | - | -- | -- | -- |
| RTU-5 | LENNOX KGA036S4D | 3 | 1200 | 1.0 | 36000 | 65K | 52K | 240 | 630 | 19 | 25 | 230/3 | 1,2,3 |
| RTU-6 | LENNOX Curb only | 2 | -- | 1.0 | -- | -- | -- | -- | -- | -- | -- | -- | -- |
| RTU-7 | LENNOX Curb only | 3 | -- | 1.0 | -- | -- | -- | -- | -- | -- | -- | -- | -- |
| EF-1 | GREENHECK G85DGE | -- | 500 | 1.0 | -- | -- | -- | -- | -- | -- | -- | 120V | -- |
| EF-2 | GREENHECK G 85DGE | -- | 500 | 1.0 | -- | -- | -- | -- | -- | -- | -- | 120V | -- |
| ZD-1 | YOUNG YOU 2015-8 | -- | -- | 1.0 | -- | -- | -- | -- | -- | -- | -- | 24V | -- |
| DS-1 | MITSUBISHI MZGE12N-8 | 1 | - | 1.0 | 12000 | -- | -- | -- | 40 | -- | -- | 120V | -- |
| DS-2 | MITSUBISHI MZGE09N-8 | .75 | - | 1.0 | 9000 | -- | -- | -- | 40 | -- | -- | 120V | -- |
| DS-3 | MITSUBISHI MZGE09N-8 | .75 | - | 1.0 | 9000 | -- | -- | -- | 40 | -- | -- | 120V | -- |
| DS-4 | MITSUBISHI MZGE09N-8 | .75 | - | 1.0 | 9000 | -- | -- | -- | 40 | -- | -- | 120V | -- |
| DS-5 | MITSUBISHI MZGE09N-8 | .75 | - | 1.0 | 9000 | -- | -- | -- | 40 | -- | -- | 120V | -- |
| CU-1 | MITSUBISHI MXZ3B3A-1 | 2.5 | - | 1.0 | 30000 | -- | -- | -- | 100 | -- | -- | 120V | -- |
| CU-2 | MITSUBISHI MXZ2B20NA-1 | 2 | - | 1.0 | 24000 | -- | -- | -- | 100 | -- | -- | 120V | -- |
| UH-1 | Hot Dawg UH75HD | -- | - | 1.0 | -- | -- | 75K | -- | 125 | -- | -- | 120V | -- |

NOTES
1. Provide outside air to meet the ventilation Code Table 403.3
2. Provide programmable thermostat
3. Provide economizer and controls

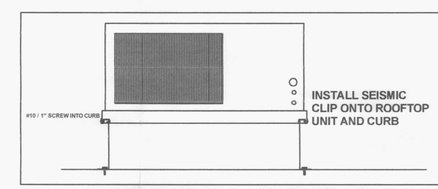


## ROOF TOP UNIT DETAIL
NTS

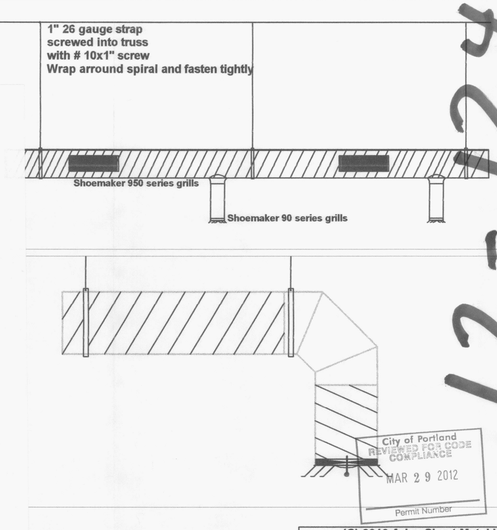


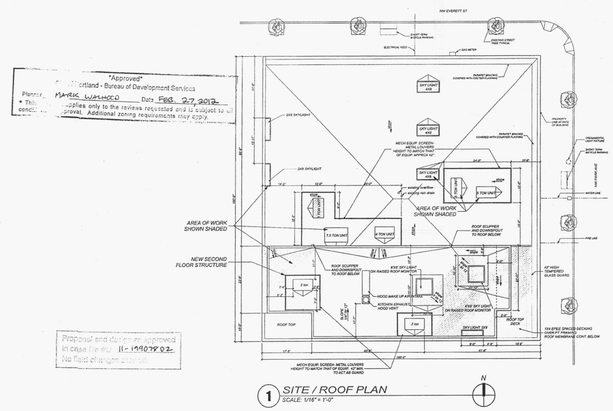


1 SITE / ROOF PLAN
SCALE: 1/16" = 1'0"

"Approved"
Portland - Bureau of Development Services
Planner MARCEL WASHINGTON Date FEB 27 2012
This approval applies only to the reviews requested and is subject to all conditions of approval. Additional zoning requirements may apply.

Proposal and plans approved in case file #: 11-199078 LU
No field changes allowed.

CASE NO. 11-199078-LU
EXHIBIT C-1

LLWolf Architecture 503-231-9742

SITEWORKS

Koch Architecture 503-888-9743

235 NW Park Ave Building

DESIGN REVIEW
2/9/12

A1

City of Portland
REVIEWED FOR CODE COMPLIANCE
MAR 29 2012
Permit Number

12-124968-MT

(C) 2010 Arjae Sheet Metal Inc.
THESE DRAWINGS ARE THE PROPERTY OF ARJAE SHEET METAL INC. AND ARE NOT TO BE USED OR REPRODUCED IN ANY MANNER, EXCEPT WITH THE PRIOR WRITTEN PERMISSION OF ARJAE SHEET METAL INC.

SCALE: 3/16"=1'0"
Date 3-1-2012
Drawn By : HB
Revisions

235 NW Park
235 NW Park ave
PORTLAND OR

Arjae Sheet Metal
8545 SE Mcloughlin Blvd
Milwaukie Or 97222 503-231-7717 503-230-4888
CCB#60835

JOB NUMBER H-45964
DRAWING NUMBER M1

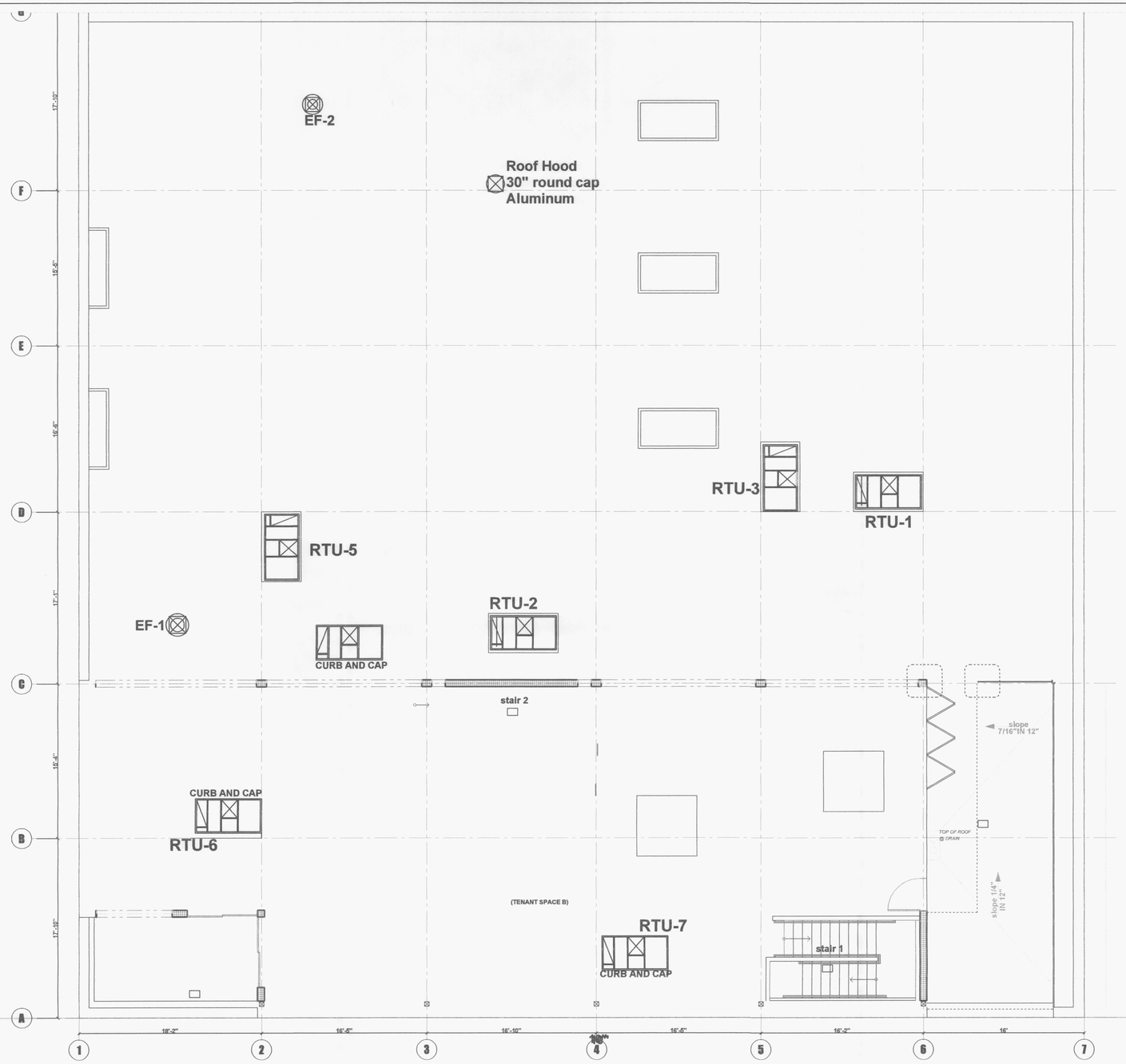


## 2ND FLOOR PLAN AND ROOF PLAN

City of Portland
REVIEWED FOR CODE COMPLIANCE
MAR 29 2012
Permit Number

(C) 2010 Arjae Sheet Metal Inc.

THESE DRAWINGS ARE THE PROPERY OF ARJAE SHEET METAL INC. AND ARE NOT TO BE USED OR REPRODUCED IN ANY MANNER, EXCEPT WITH THE PRIOR WRITTEN PERMISSION OF ARJAE SHEET METAL INC.

SCALE: $\frac{3}{16}$" = 1'0"
Date 3-1-12
Drawn By : HB
Revisions

# 235 NW Park

235 NW Park,
PORTLAND OR

Arjae Sheet Metal
8545 SE Mcloughlin Blvd
Milwaukie Or 97222 503-231-7717 503-230-4888
CCB#60835

JOB NUMBER H-45964
DRAWING NUMBER M2

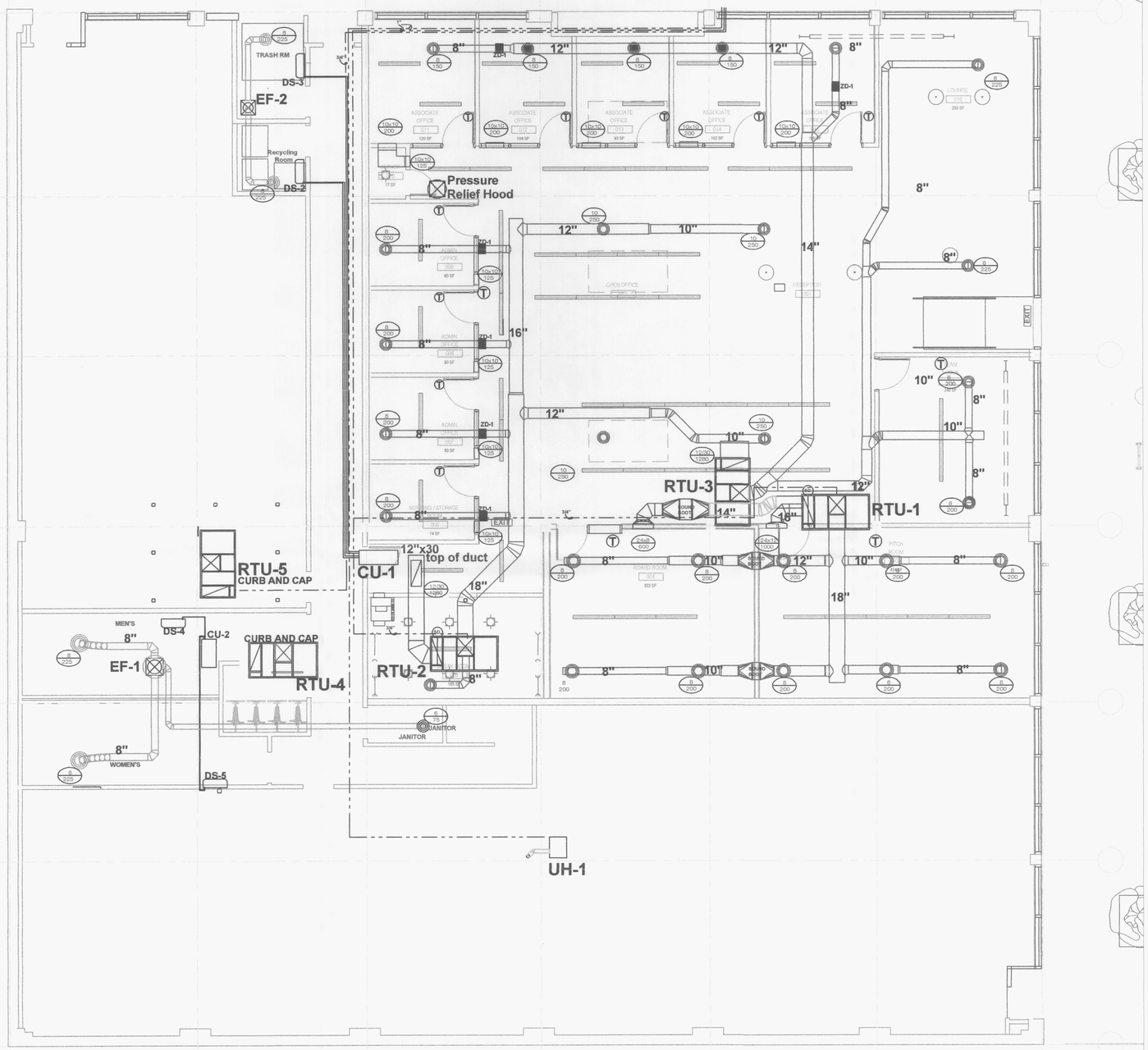


HVAC Floor Plan
3/16" = 1'0"

# EQUIPMENT SHEDULE

| Unit Number | Model | Tons | CFM | SP | COOLING BTU | HEATING Input | HEATING Output | OSA | WEIGHT | MCA | MOCP | Voltage | NOTES |
|---|---|---|---|---|---|---|---|---|---|---|---|---|---|
| RTU-1 | LENNOX KGA060S4D | 5 | 2000 | 1.0 | 60K | 65K | 58 K | 400 | 601 | -- | -- | 230/3 | 1,2,3 |
| RTU-2 | LENNOX KGA060S4D | 5 | 2000 | 1.0 | 60K | 65K | 58K | 400 | 601 | -- | -- | 230/3 | 1,2,3 |
| RTU-3 | LENNOX KGA048S4D | 4 | 1600 | 1.0 | 48000 | 105K | 84K | 320 | 667 | 23 | 35 | 230/3 | 1,2,3 |
| RTU-4 | LENNOX Curb Only | 7.5 | -- | -- | -- | -- | -- | --- | -- | - | -- | -- | -- |
| RTU-5 | LENNOX KGA036S4D | 3 | 1200 | 1.0 | 36000 | 65K | 52K | 240 | 630 | 19 | 25 | 230/3 | 1,2,3 |
| RTU-6 | LENNOX Curb only | 2 | -- | 1.0 | -- | -- | -- | -- | -- | -- | -- | -- | -- |
| RTU-7 | LENNOX Curb only | 3 | -- | 1.0 | -- | -- | -- | -- | -- | -- | -- | -- | -- |
| EF-1 | GREENHECK G85DGE | -- | 500 | 1.0 | -- | -- | -- | -- | -- | -- | -- | 120V | -- |
| EF-2 | GREENHECK G 85DGE | -- | 500 | 1.0 | -- | -- | -- | -- | -- | -- | -- | 120V | -- |
| ZD-1 | YOUNG YOU 2015-8 | -- | -- | 1.0 | -- | -- | -- | -- | -- | -- | -- | 24V | -- |
| DS-1 | MITSUBISHI MZGE12N-8 | 1 | - | 1.0 | 12000 | -- | -- | -- | 40 | -- | -- | 120V | -- |
| DS-2 | MITSUBISHI MZGE09N-8 | .75 | - | 1.0 | 9000 | -- | -- | -- | 40 | -- | -- | 120V | -- |
| DS-3 | MITSUBISHI MZGE09N-8 | .75 | - | 1.0 | 9000 | -- | -- | -- | 40 | -- | -- | 120V | -- |
| DS-4 | MITSUBISHI MZGE09N-8 | .75 | - | 1.0 | 9000 | -- | -- | -- | 40 | -- | -- | 120V | -- |
| DS-5 | MITSUBISHI MZGE09N-8 | .75 | - | 1.0 | 9000 | -- | -- | -- | 40 | -- | -- | 120V | -- |
| CU-1 | MITSUBISHI MXZ3B3A-1 | 2.5 | - | 1.0 | 30000 | -- | -- | -- | 100 | -- | -- | 120V | -- |
| CU-2 | MITSUBISHI MXZ2B20NA-1 | 2 | - | 1.0 | 24000 | -- | -- | -- | 100 | -- | -- | 120V | -- |
| UH-1 | Hot Dawg UH75HD | -- | - | 1.0 | -- | -- | 75K | -- | 125 | -- | -- | 120V | -- |

NOTES
1. Provide outside air to meet the ventilation Code Table 403.3
2. Provide programmable thermostat
3. Provide economizer and controls

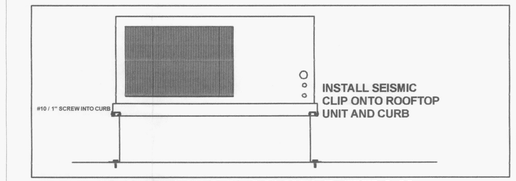


## ROOF TOP UNIT DETAIL

NTS

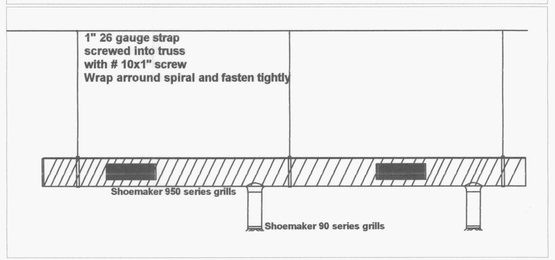


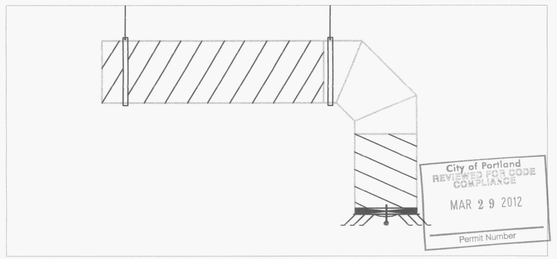


(C) 2010 Arjae Sheet Metal Inc.

THESE DRAWINGS ARE THE PROPERY OF ARJAE SHEET METAL INC. AND ARE NOT TO BE USED OR REPRODUCED IN ANY MANNER, EXCEPT WITH THE PRIOR WRITTEN PERMISSION OF ARJAE SHEET METAL INC.

SCALE: 3/16"=1'0"

235 NW Park

235 NW Park ave

PORTLAND OR

Date 3-1-2012

Drawn By : HB

Revisions

Arjae Sheet Metal
8545 SE Mcloughlin Blvd
Milwaukie Or 97222 503-231-7717 503-230-4888
CCB#60835

JOB NUMBER H-45964

DRAWING NUMBER M1

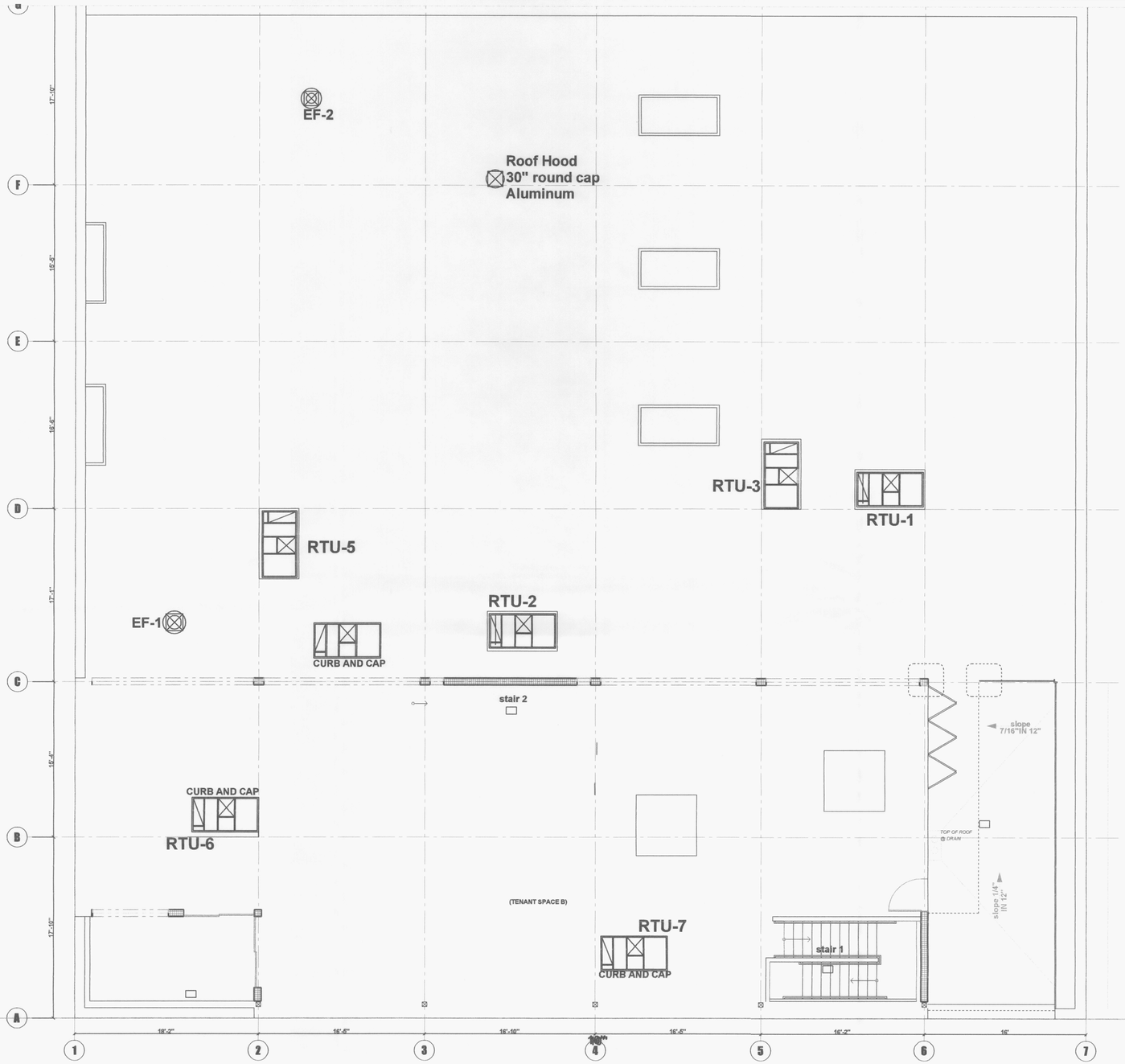


# 2ND FLOOR PLAN AND ROOF PLAN

City of Portland
REVIEWED FOR CODE COMPLIANCE
MAR 29 2012
Permit Number

(C) 2010 Arjae Sheet Metal Inc.

THESE DRAWINGS ARE THE PROPERY OF ARJAE SHEET METAL INC. AND ARE NOT TO BE USED OR REPRODUCED IN ANY MANNER, EXCEPT WITH THE PRIOR WRITTEN PERMISSION OF ARJAE SHEET METAL INC.

SCALE: $\frac{3}{16}$" = 1'0"
Date 3-1-12
Drawn By : HB
Revisions

235 NW Park
235 NW Park,
PORTLAND OR

Arjae Sheet Metal
8545 SE Mcloughlin Blvd
Milwaukie Or 97222 503-231-7717 503-230-4888
CCB#60835

JOB NUMBER H-45964
DRAWING NUMBER M2

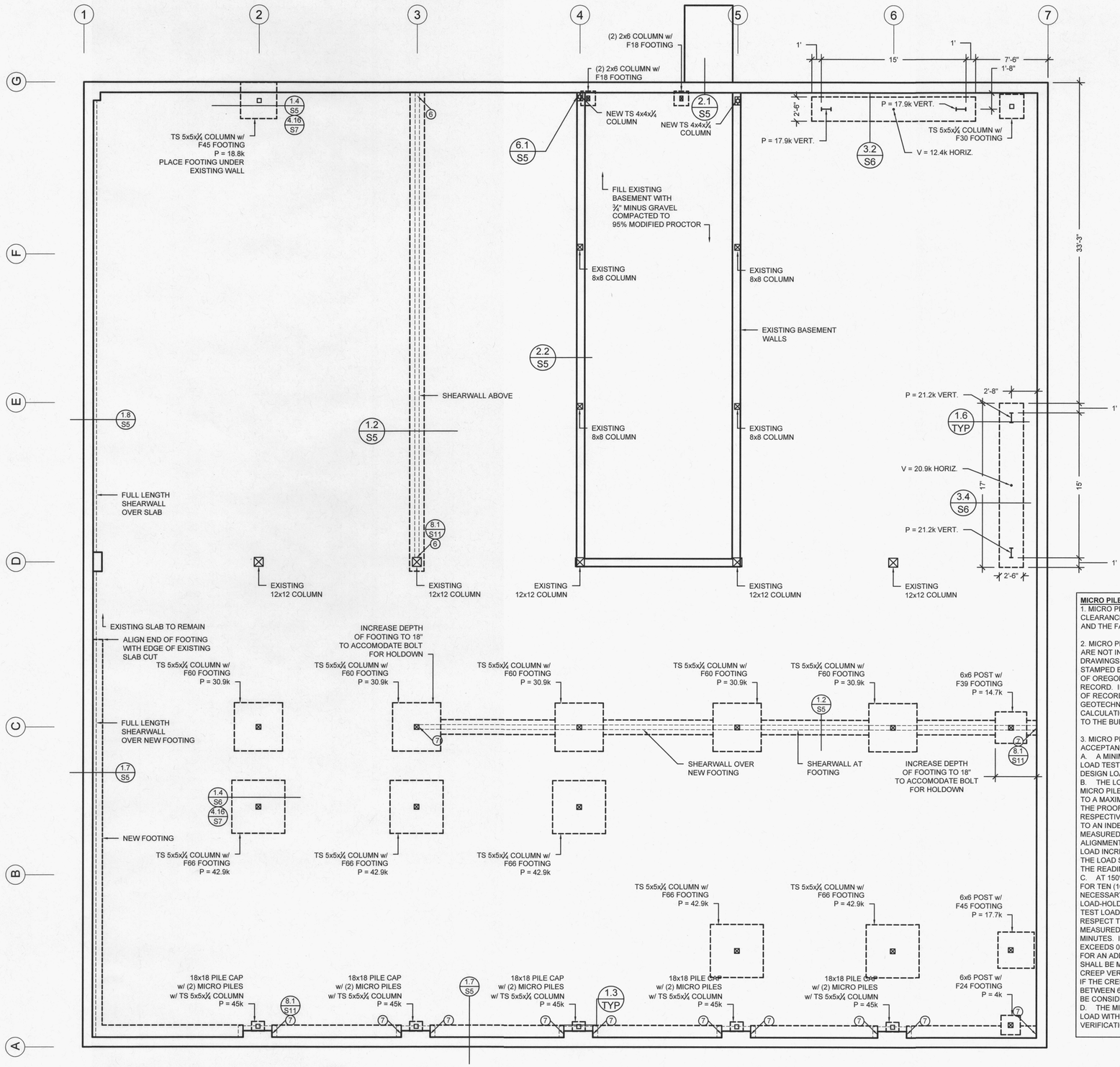


1 / S1 FOUNDATION LAYOUT
SCALE: 3/16" = 1'-0"

**MICRO PILE NOTES:**

1. MICRO PILES ARE TO MAINTAIN A MINIMUM 1'-0" CLEARANCE MICRO PILE CASING AND/OR THE GROUT BODY AND THE FACE OF THE NEIGHBORING WALL.

2. MICRO PILES ARE A DEFERRED SUBMITTAL AND ARE NOT INCLUDED IN THIS BUILDING PERMIT. THE DRAWINGS AND CALCULATIONS ARE REQUIRED TO BE STAMPED BY AN ENGINEER REGISTERED IN THE STATE OF OREGON, AND APPROVED BY THE ENGINEER OF RECORD. IN ADDITION, THE GEOTECHNICAL ENGINEER OF RECORD MUST TAKE NO EXCEPTIONS TO THE GEOTECHNICAL DESIGN PARAMETERS. THE DRAWINGS, CALCULATIONS AND APPROVALS MUST BE SUBMITTED TO THE BUREAU OF DEVELOPMENT SERVICES FOR REVIEW.

3. MICRO PILE VERIFICATION AND PROOF LOAD TEST AND ACCEPTANCE CRITERIA
A. A MINIMUM OF ONE MICRO PILE SHALL BE VERIFICATION LOAD TESTED. THE TESTS MUST BE BASED ON THE MAXIMUM DESIGN LOADS IN COMPRESSION.
B. THE LOAD TESTS SHALL BE PERFORMED BY LOADING THE MICRO PILES IN INCREMENTS OF 25% OF THE DESIGN LOAD TO A MAXIMUM OF 150% AND 200% OF THE DESIGN LOAD FOR THE PROOF LOAD AND VERIFICATION LOAD TESTS RESPECTIVELY. THE MICRO PILE MOVEMENT WITH RESPECT TO AN INDEPENDENT FIXED REFERENCE (CREEP) SHAPP BE MEASURED TO THE NEAREST 0.001 INCH (0.025 mm) AT THE ALIGNMENT LOAD AND AT EACH INCREMENT OF LOAD. AT LOAD INCREMENTS OTHER THAN 150% OF THE DESIGN LOAD, THE LOAD SHALL BE HELD JUST LONG ENOUGH TO OBTAIN THE READING.
C. AT 150% OF THE DESIGN LOAD, THE LOAD SHALL BE HELD FOR TEN (10) MINUTES. THE JACK SHALL BE ADJUSTED AS NECESSARY IN ORDER TO MAINTAIN A CONSTANT LOAD. THE LOAD-HOLD PERIOD SHALL START AS SOON AS THE MAXIMUM TEST LOAD IS APPLIEDAND THE MICRO PILE MOVEMENT WITH RESPECT TO A FIXED REFERENCE (CREEP) SHALL BE MEASURED AND RECORDED AT 1 MINUTE, 2, 3, 4, 5, 6 AND 10 MINUTES. IF THE CREEP BETWEEN 1 MINUTE AND 10 MINUTES EXCEEDS 0.04 INCHES (1 mm), THE LOAD TEST SHALL BE HELD FOR AN ADDITIONAL 50 MINUTES. MICRO PILE MOVEMENTS SHALL BE MEASURED AT 15, 20, 30, 40, 50 AND 60 MINUTES. THE CREEP VERSUS THE LOGARITHM OF TIME SHALL BE PLOTTED. IF THE CREEP RATE IS LESS THAN 0.080 INCHES (2 mm) BETWEEN 6 AND 60 MINUTES, THE PROOF TEST LOADING SHALL BE CONSIDERED SUCCESSFUL.
D. THE MICRO PILE SHALL SUSTAIN 200% OF THE DESIGN LOAD WITHOUT CONTINUOUS MOVEMENT IN ORDER FOR THE VERIFICATION LOAD TEST TO BE CONSIDERED SUCCESSFUL.

City of Portland
REVIEWED FOR CODE COMPLIANCE
MAR 29 2012
Permit Number

REGISTERED PROFESSIONAL ENGINEER
56230PE
OREGON
JAN 15, 2002
SCOTT T. OGREN
RENEWAL 12/31/2012


OGREN ENGINEERING
RESIDENTIAL AND COMMERCIAL STRUCTURES
3254 NE AINSWORTH ST
PORTLAND, OR 97211
503-281-0109
scott@ogreneng.com


| DRAWN BY: | CHECKED BY: |
|---|---|
| STO | STO |
| SCALE: | ISSUE DATE: |
| 3/16" = 1'-0" | 12/6/11 |

REVISIONS:

| | | |
|---|---|---|
| 1 | STO | 12/12/11 |
| 2 | STO | 12/16/11 |
| 3 | STO | 1/16/12 |
| 4 | STO | 2/3/12 |
| 5 | STO | 3/5/12 |

# 235 NW PARK
## THE LEMON HOTEL LLC
## FOUNDATION LAYOUT

1118.DWG

S1

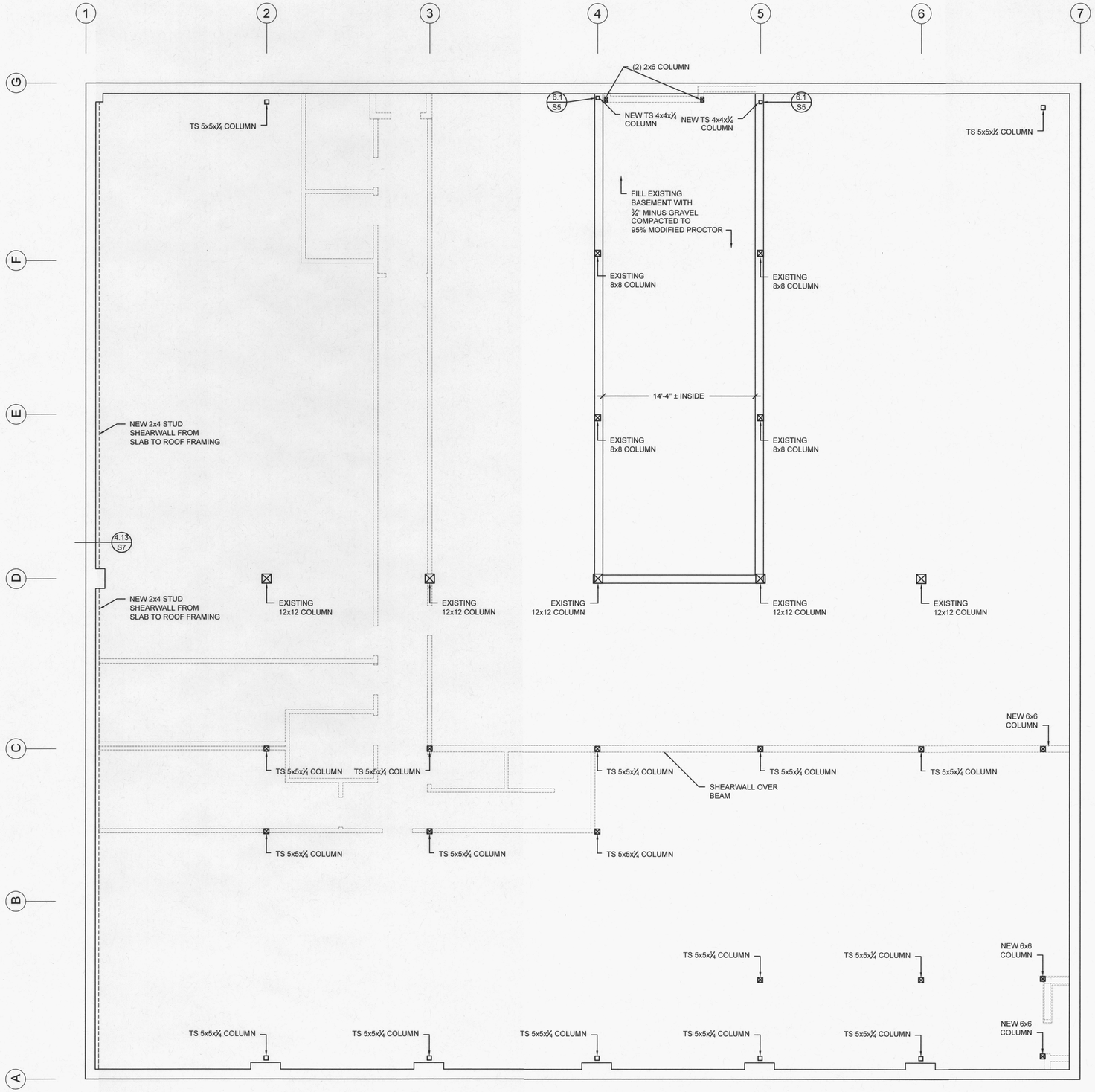


1 / S2 MAIN FLOOR FRAMING
SCALE: 3/16" = 1'-0"

REGISTERED PROFESSIONAL ENGINEER 56230PE
OREGON JAN. 15, 2002 SCOTT T. OGREN
RENEWAL 12/31/2012


OGREN ENGINEERING
RESIDENTIAL AND COMMERCIAL STRUCTURES
3254 NE AINSWORTH ST
PORTLAND, OR 97211
503-281-0109
scott@ogreneng.com


| DRAWN BY: | CHECKED BY: |
|---|---|
| STO | STO |
| SCALE: | ISSUE DATE: |
| 3/16" = 1'-0" | 12/6/11 |

REVISIONS:

| | | |
|---|---|---|
| 1 | STO | 12/12/11 |
| 2 | STO | 12/16/11 |
| 3 | STO | 1/16/12 |
| 4 | STO | 2/3/12 |
| 5 | STO | 2/17/12 |

# 235 NW PARK
## THE LEMON HOTEL LLC
## MAIN FLOOR FRAMING

City of Portland
REVIEWED FOR CODE COMPLIANCE
MAR 29 2012
Permit Number

1118.DWG

S2

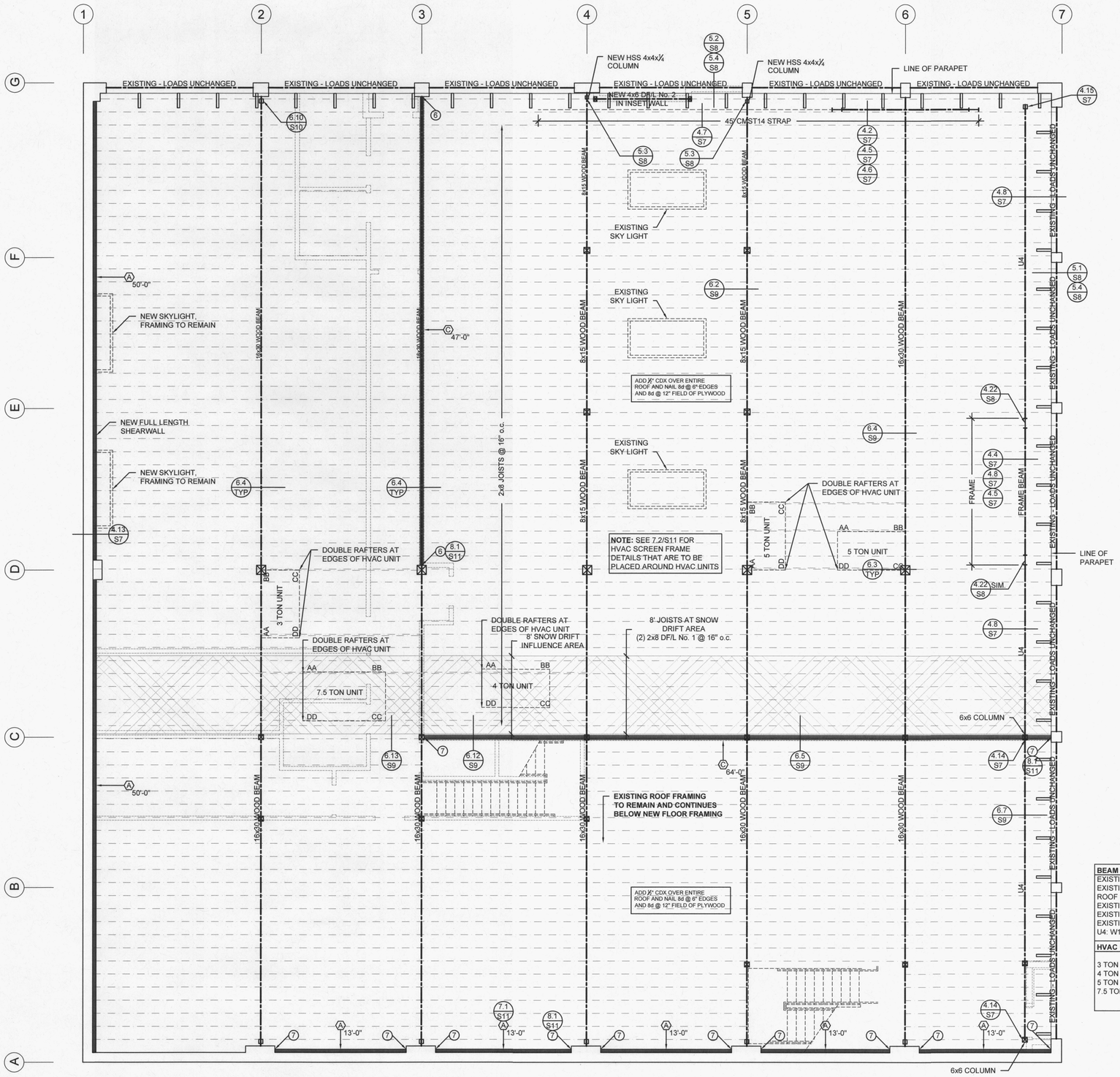


1 S3 LOWER ROOF FRAMING
SCALE: 3/16" = 1'-0"

**BEAM SCHEDULE**

EXISTING ROOF JOISTS: 2x8 DF/L No. 1 & BTR. @ 16" o.c. O.K.
EXISTING ROOF JOISTS AT HVAC: 2x8 DF/L No. 1 & BTR. @ 16" o.c.
ROOF JOISTS AT SNOW DRIFT: (2) 2x8 DF/L No. 1 & BTR. @ 16" o.c.
EXISTING 16x30 AT ROOF: 16x30 O.K.
EXISTING 8x15 AT ROOF: 8x15 O.K.
EXISTING 16x30 AT NEW UPPER FLOOR: 16x30 O.K.
U4: W12x22 A572 STEEL

**HVAC UNIT CORNER WEIGHTS**

| | AA | BB | CC | DD |
|---|---|---|---|---|
| 3 TON | 88 lbs | 96 lbs | 263 lbs | 241 lbs |
| 4 TON | 195 lbs | 212 lbs | 227 lbs | 241 lbs |
| 5 TON | 195 lbs | 212 lbs | 263 lbs | 241 lbs |
| 7.5 TON | 331 lbs | 289 lbs | 309 lbs | 362 lbs |

City of Portland
REVIEWED FOR CODE COMPLIANCE
MAR 29 2012
Permit Number

REGISTERED PROFESSIONAL ENGINEER
56230PE
OREGON
JAN 15, 2002
SCOTT T. OGREN
RENEWAL 12/31/2012


OGREN ENGINEERING
RESIDENTIAL AND COMMERCIAL STRUCTURES
3254 NE AINSWORTH ST
PORTLAND, OR 97211
503-281-0109
scott@ogreneng.com


| DRAWN BY: | CHECKED BY: |
|---|---|
| STO | STO |
| SCALE: | ISSUE DATE: |
| 3/16" = 1'-0" | 12/6/11 |

REVISIONS:

| | | |
|---|---|---|
| 1 | STO | 12/12/11 |
| 2 | STO | 12/16/11 |
| 3 | STO | 1/16/12 |
| 4 | STO | 2/3/12 |
| 5 | STO | 2/17/12 |

# 235 NW PARK
## THE LEMON HOTEL LLC
## LOWER ROOF/UPPER FLOOR FRAMING

1118.DWG

S3

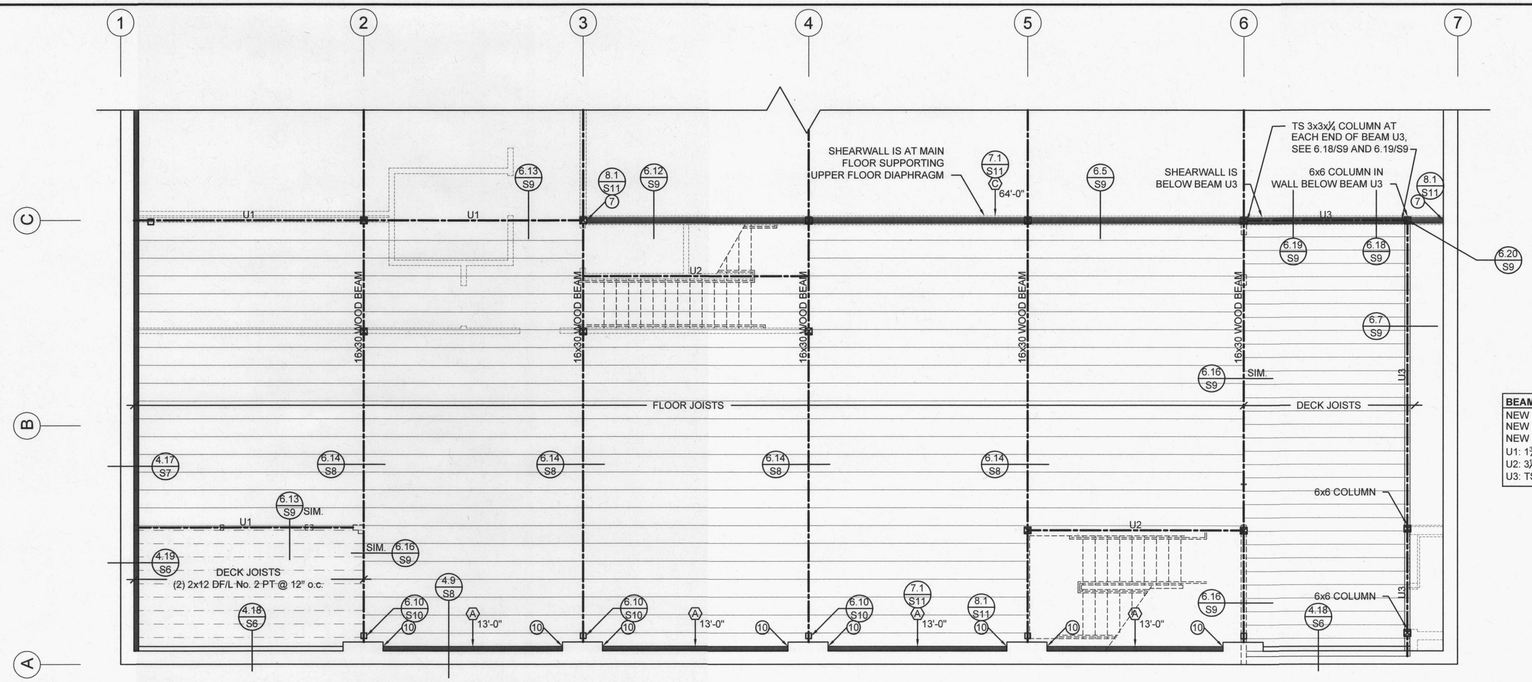


1 / S4 UPPER FLOOR FRAMING
SCALE: 3/16" = 1'-0"

**BEAM SCHEDULE**

NEW UPPER FLOOR JOISTS: 11⅞ TJI 360 @ 16" o.c.
NEW DECK JOISTS: 2x12 DF/L No. 2 @ 12" o.c. PT
NEW LONG DECK JOISTS: (2) 2x12 DF/L No. 2 @ 12" o.c. PT
U1: 1¾x11⅞ LVL
U2: 3½x11⅞ PSL
U3: TS 4x16x½

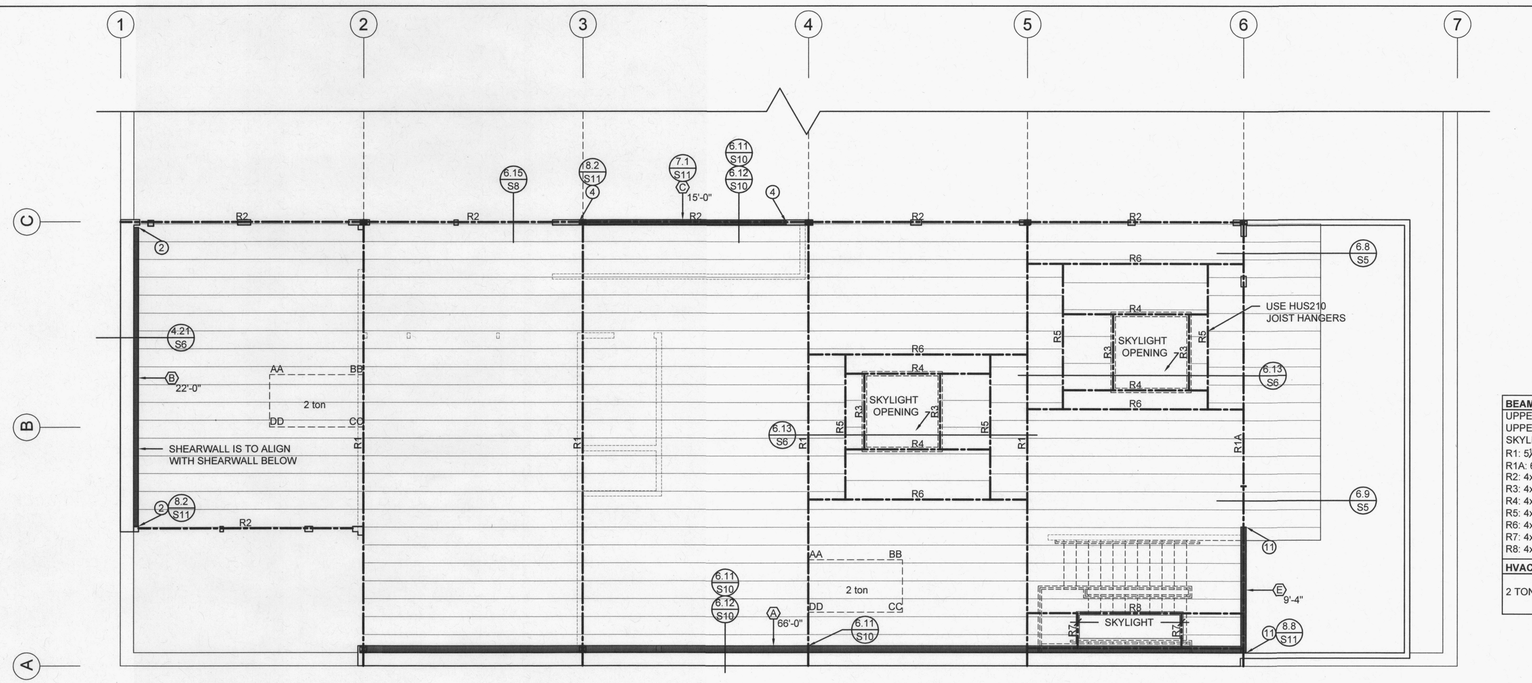


2 / S4 UPPER ROOF FRAMING
SCALE: 3/16" = 1'-0"

**BEAM SCHEDULE**

UPPER ROOF JOISTS: 2x12 DF/L No. 2 @ 16" o.c.
UPPER ROOF JOISTS AT SKYLIGHT: 2x12 DF/L No. 2 @ 16" o.c.
SKYLIGHT JOISTS: 2x8 DF/L No. 2 @ 24" o.c.
R1: 5⅛ x 25½ GL (24F-V4)
R1A: 6⅞x24 GL (24F-V4)
R2: 4x12 DF/L No. 2
R3: 4x8 DF/L No. 2
R4: 4x8 DF/L No. 2
R5: 4x12 DF/L No. 2
R6: 4x12 DF/L No. 2
R7: 4x12 DF/L No. 2
R8: 4x12 DF/L No. 2

**HVAC UNIT CORNER WEIGHTS**

| | AA | BB | CC | DD |
|---|---|---|---|---|
| 2 TON | 88 lbs | 96 lbs | 263 lbs | 241 lbs |

City of Portland
REVIEWED FOR CODE CONFORMANCE
MAR 29 2012
Permit Number

REGISTERED PROFESSIONAL ENGINEER 56230PE
OREGON
JAN 15, 2002
SCOTT T. OGREN
RENEWAL 12/31/2012


OGREN ENGINEERING
RESIDENTIAL AND COMMERCIAL STRUCTURES
3254 NE AINSWORTH ST
PORTLAND, OR 97211
503-281-0109
scott@ogreneng.com


| DRAWN BY: | CHECKED BY: |
|---|---|
| STO | STO |
| SCALE: | ISSUE DATE: |
| 3/16" = 1'-0" | 12/6/11 |

REVISIONS:

| | | |
|---|---|---|
| 1 | STO | 12/12/11 |
| 2 | STO | 12/16/11 |
| 3 | STO | 1/16/12 |
| 4 | STO | 2/3/12 |
| 5 | STO | 2/17/12 |

# 235 NW PARK
## THE LEMON HOTEL LLC
## UPPER ROOF FRAMING

1118.DWG

S4

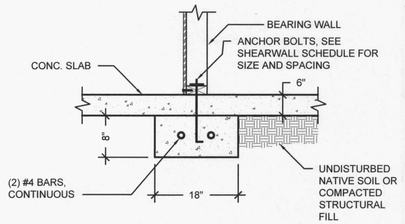


1.2 SLAB FOOTING

| MARK | SIZE (L" X W" X H") | REBAR (EACH WAY TYP.) | CAPACITY kips |
|---|---|---|---|
| F18 | 18 X 18 X 12 | (2) #4 | 3 |
| F30 | 30 X 30 X 12 | (3) #4 | 9 |
| F39 | 39 X 39 X 15 | (3) #4 | 15 |
| F45 | 45 X 45 X 15 | (4) #4 | 20 |
| F60 | 60 X 60 X 15 | (6) #4 | 35 |
| F63 | 63 X 63 X 15 | (6) #4 | 40 |
| F66 | 66 X 66 X 15 | (6) #4 | 45 |

SOIL BEARING = 1,500 psf
CONCRETE F'c = 2,500 psi
GRADE 60 REBAR

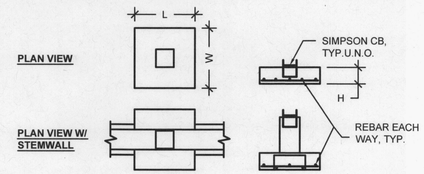


1.4 CONCRETE FOOTING SCHEDULE

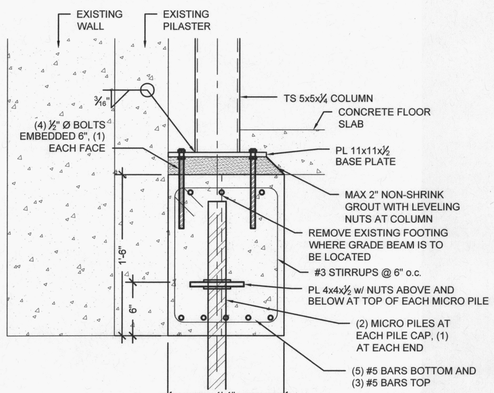


1.3 PILE CAP AT COLUMN SUPPORT

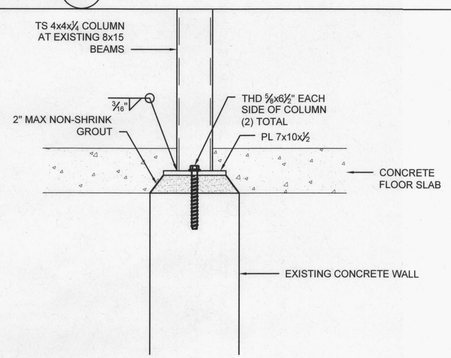


6.1 NEW COLUMN AT EXISTING 8x15 BEAMS
COLUMN AT BASE PLATE AND FOUNDATION

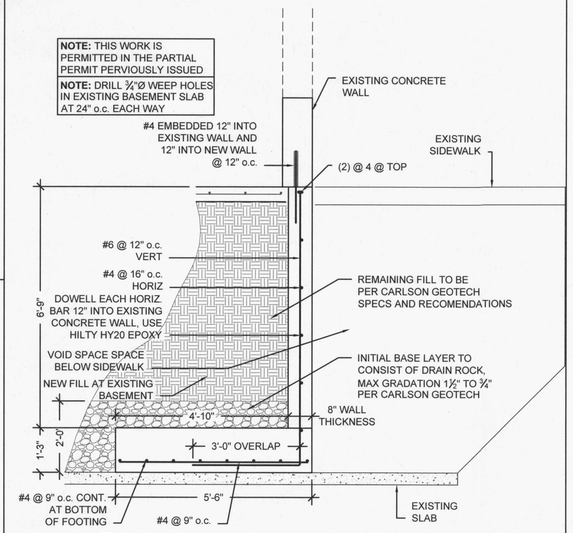


2.1 NEW FOOTING AT EXISTING FOUNDATION OPENING
SUPPORT FOR EXISTING CONCRETE BEAM

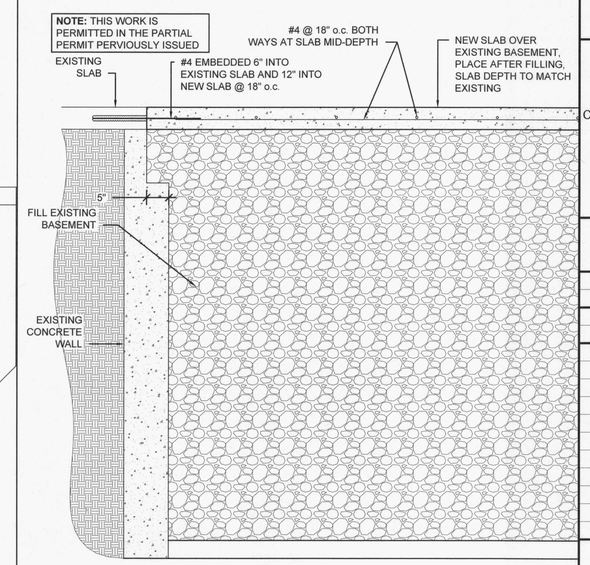


2.2 SLAB OVER EXISTING BASEMENT
FILL EXISTING BASEMENT

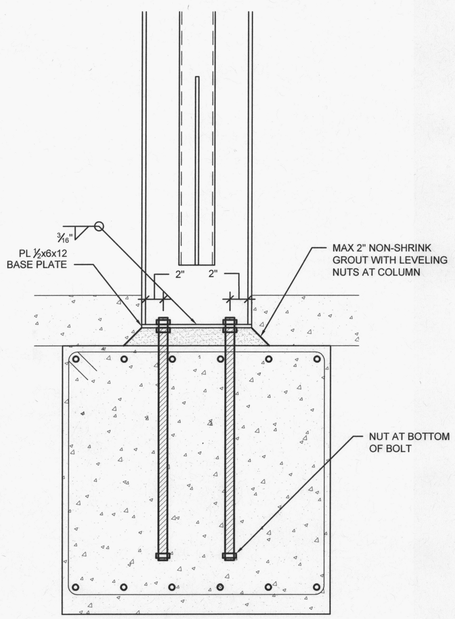


1.6 STEEL FRAME COLUMN SUPPORT
CONNECTION TO GRADE BEAM

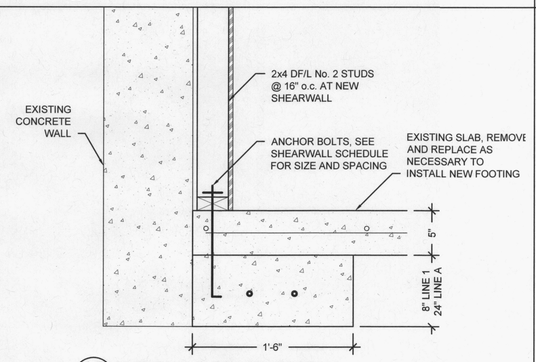


1.7 SHEARWALL TO NEW FOOTING
SHEARWALL AT GRIDLINES A AND 1

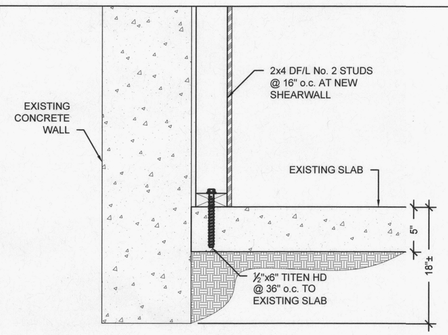


1.8 SHEARWALL TO EXISTING SLAB
SHEARWALL AT GRIDLINE 1

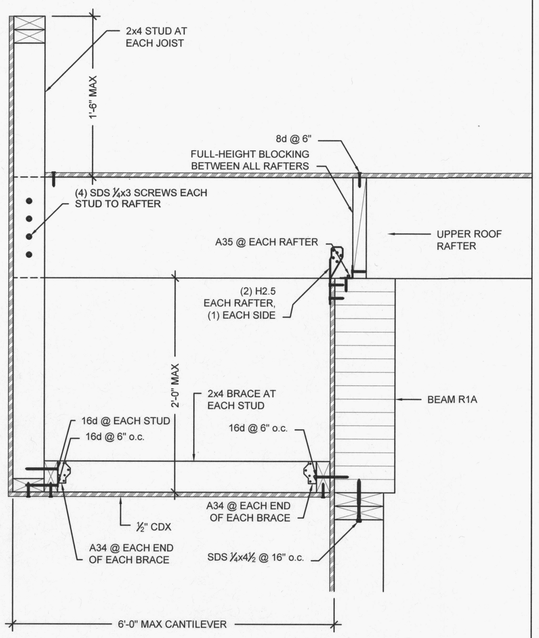


6.8 DECK ROOF OVERHANG

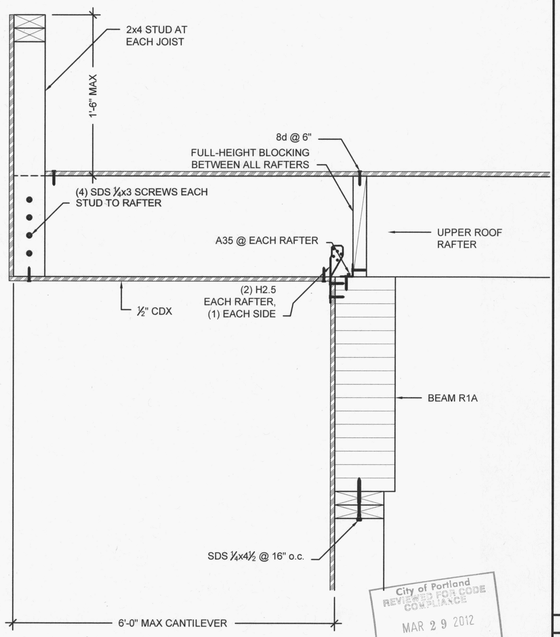


6.9 DECK ROOF OVERHANG

City of Portland
REVIEWED FOR CODE COMPLIANCE
MAR 29 2012
Permit Number

REGISTERED PROFESSIONAL ENGINEER
56230PE
OREGON
JAN 15, 2002
SCOTT T. OGREN
RENEWAL 12/31/2012


OGREN ENGINEERING
RESIDENTIAL AND COMMERCIAL STRUCTURES
3254 NE AINSWORTH ST
PORTLAND, OR 97211
503-281-0109
scott@ogreneng.com


| DRAWN BY: | CHECKED BY: |
|---|---|
| STO | STO |
| SCALE: | ISSUE DATE: |
| NONE | 12/6/11 |

REVISIONS:

| | | |
|---|---|---|
| 1 | STO | 12/12/11 |
| 2 | STO | 12/16/11 |
| 3 | STO | 1/16/12 |
| 4 | STO | 2/3/12 |
| 5 | STO | 2/17/12 |
| 6 | STO | 3/21/12 |

# 235 NW PARK
THE LEMON HOTEL LLC

FOOTING AND SLAB DETAILS

1118.DWG

S5

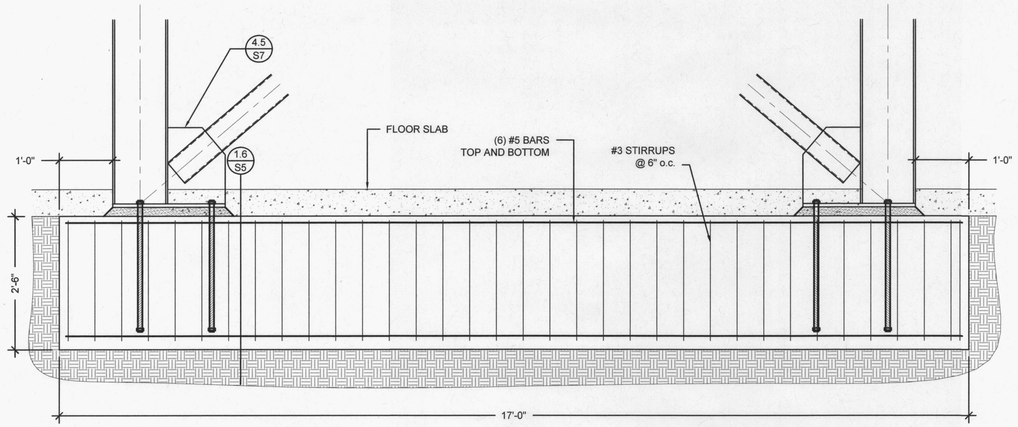


3.3 GRADE BEAM AT LINE G

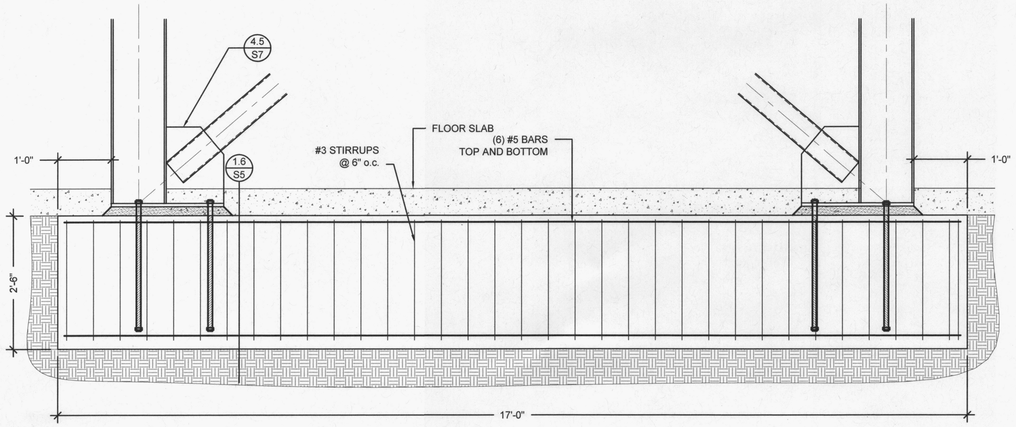


3.4 GRADE BEAM AT LINE 7

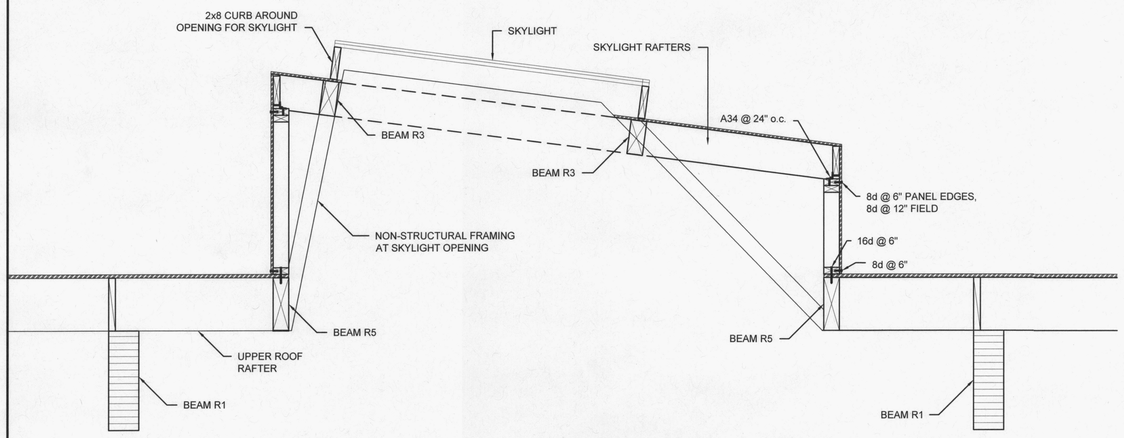


6.13 S6 FRAMING AT SKYLIGHT
SKYLIGHTS AT UPPER ROOF FRAMING

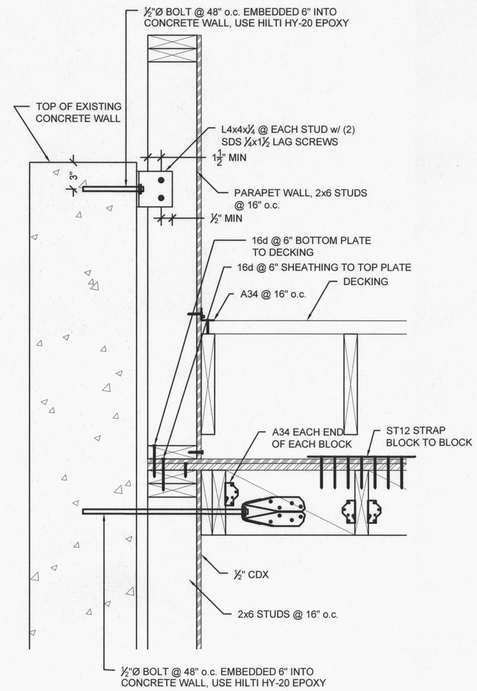


4.18 PARAPET AT LINE A
PARAPET WALL AT EXTERIOR DECK

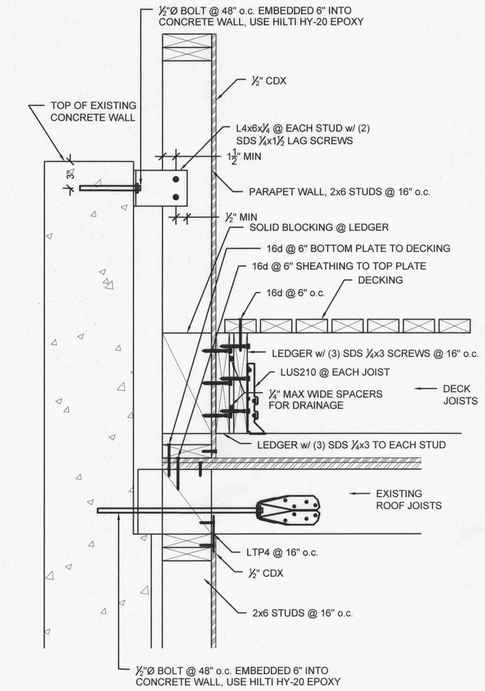


4.19 PARAPET AT LINE 1
PARAPET WALL AT EXTERIOR DECK

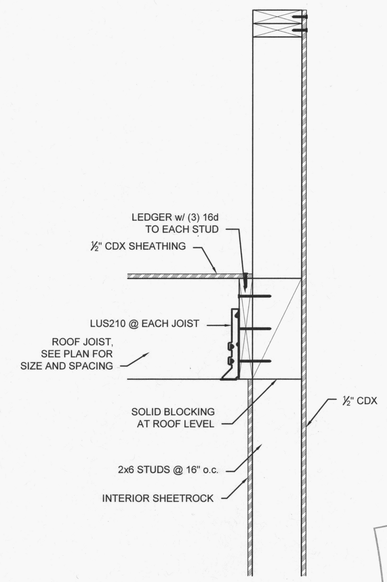


4.21 2nd FLOOR WALL AT GRID 1
TOP OF WALL

City of Portland
REVIEWED FOR CODE
COMPLIANCE
MAR 29 2012
Permit Number

REGISTERED PROFESSIONAL ENGINEER
56230PE
OREGON
JAN 15, 2002
SCOTT T. OGREN
RENEWAL 12/31/2012


OGREN
ENGINEERING
RESIDENTIAL AND
COMMERCIAL STRUCTURES
3254 NE AINSWORTH ST
PORTLAND, OR 97211
503-281-0109
scott@ogreneng.com


| DRAWN BY: | CHECKED BY: |
|---|---|
| STO | STO |
| SCALE: | ISSUE DATE: |
| NONE | 12/6/11 |

REVISIONS:

| | | |
|---|---|---|
| 1 | STO | 12/12/11 |
| 2 | STO | 12/16/11 |
| 3 | STO | 1/16/12 |
| 4 | STO | 2/3/12 |
| 5 | STO | 2/17/12 |

# 235 NW PARK
THE LEMON HOTEL LLC
FRAME AND FOOTING DETAILS

1118.DWG

S6

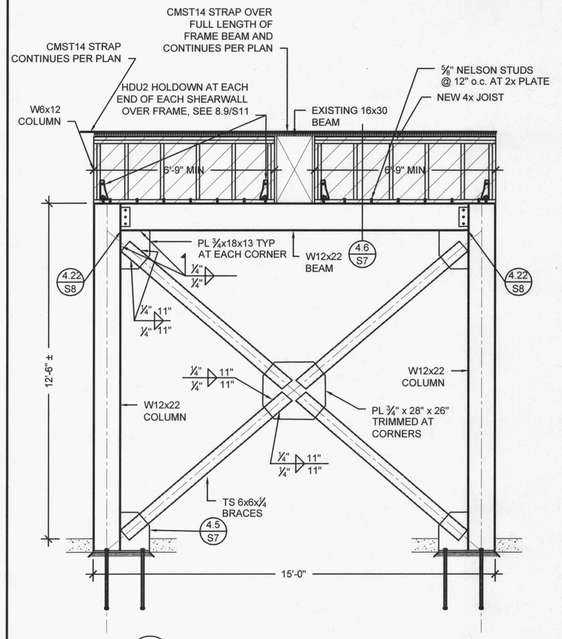


4.2 FRAME AT LINE G

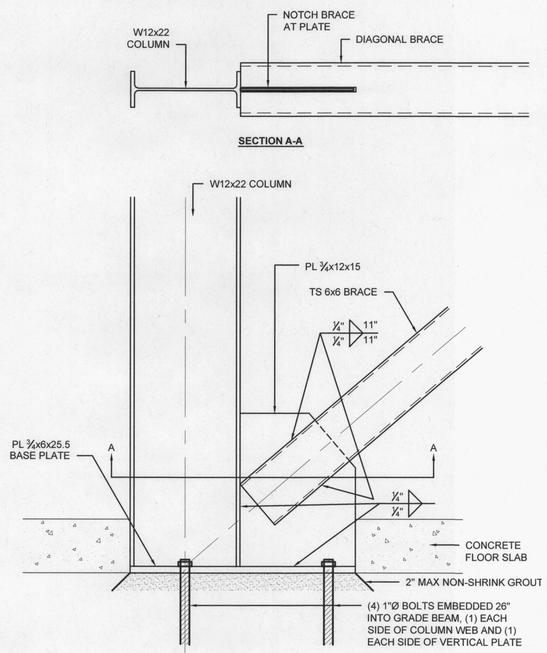


4.5 FRAME COLUMN TO GRADE BEAM

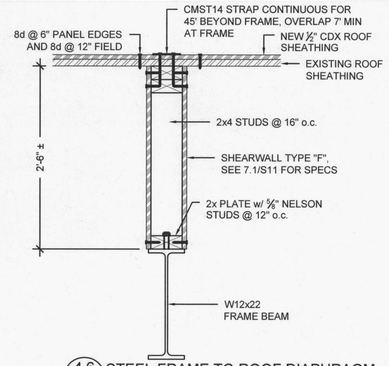


4.6 STEEL FRAME TO ROOF DIAPHRAGM
FRAME AT LINE G

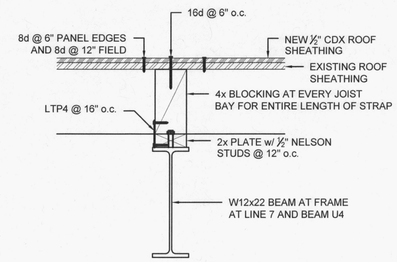


4.8 STEEL FRAME TO ROOF DIAPHRAGM
FRAME AT LINE 7 AND BEAM U4

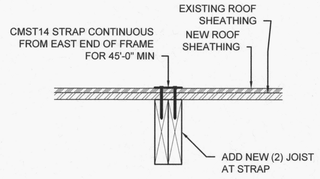


4.7 CMST STRAP AT FRAME
FRAME CONNECTION TO ROOF DIAPHRAGM

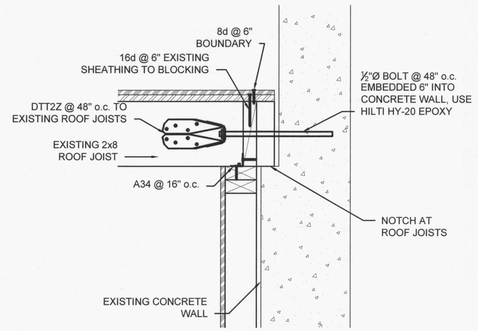


4.13 LEDGER AT ROOF JOISTS
LEDGER AT CONCRETE WALLS

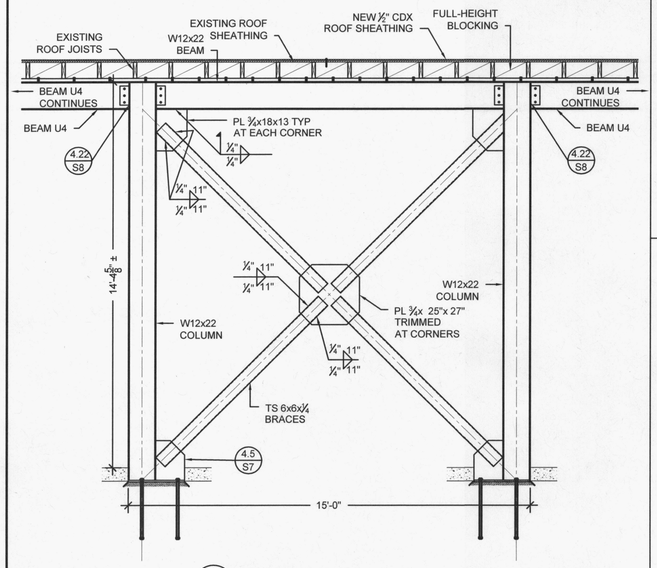


4.4 FRAME AT LINE 7

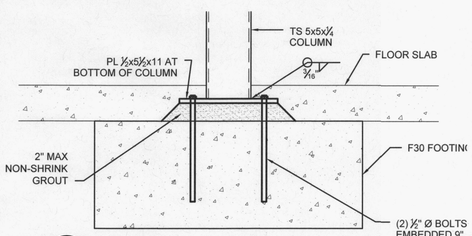


4.16 STEEL COLUMN TO FOOTING

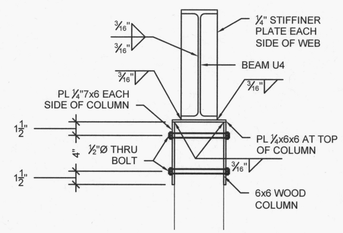


4.14 STEEL BEAM TO WOOD COLUMN

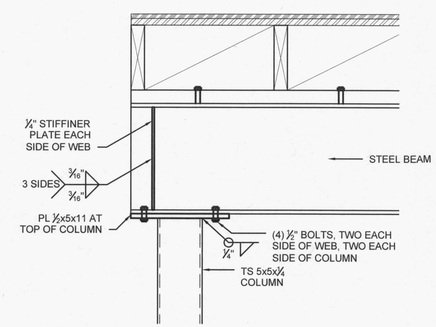


4.15 STEEL BEAM TO STEEL COLUMN

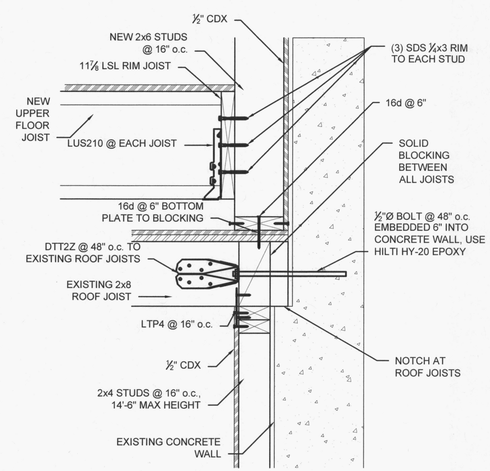


4.17 2nd FLOOR WALL AT GRID 1
LEDGER AT CONCRETE WALLS

City of Portland
REVIEWED FOR CODE COMPLIANCE
MAR 29 2012
Permit Number

REGISTERED PROFESSIONAL ENGINEER 56230PE
OREGON
JAN 15, 2002
SCOTT T. OGREN
RENEWAL 12/31/2012

OGREN ENGINEERING
RESIDENTIAL AND COMMERCIAL STRUCTURES
3254 NE AINSWORTH ST
PORTLAND, OR 97211
503-281-0109
scott@ogreneng.com

| DRAWN BY: | CHECKED BY: |
|---|---|
| STO | STO |
| SCALE: | ISSUE DATE: |
| NONE | 12/6/11 |

REVISIONS:

| | | |
|---|---|---|
| 1 | STO | 12/12/11 |
| 2 | STO | 12/16/11 |
| 3 | STO | 1/16/12 |
| 4 | STO | 2/3/12 |
| 5 | STO | 2/17/12 |

# 235 NW PARK
THE LEMON HOTEL LLC

FOOTING DETAILS
PIN PILE DETAILS

1118.DWG

S7

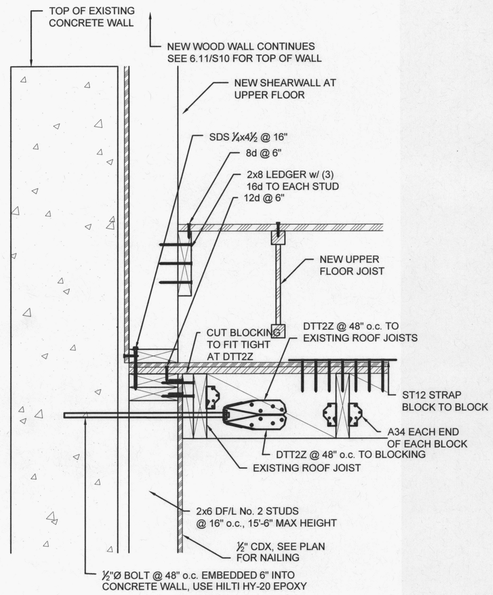


4.9 SHEARWALL AT LINE A
MAIN LEVEL SHEARWALL BETWEEN PILASTERS

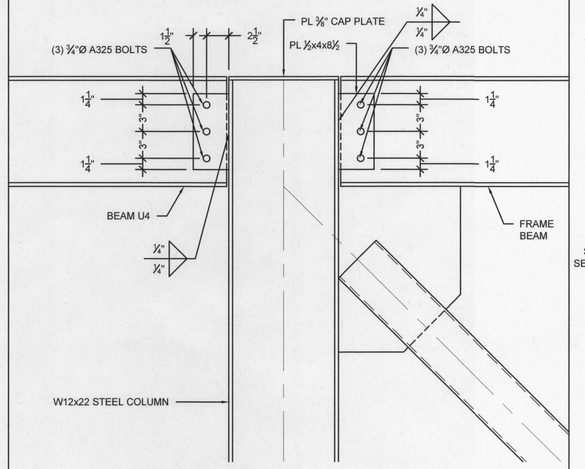


4.22 STEEL COLUMN TO STEEL BEAM

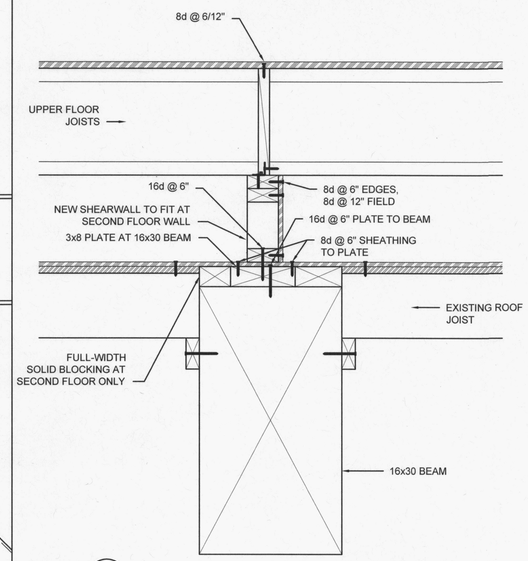


6.14 TYPICAL INTERMEDIATE UPPER FLOOR JOISTS SUPPORT
UPPER FLOOR JOISTS TO EXISTING 16x30 BEAM

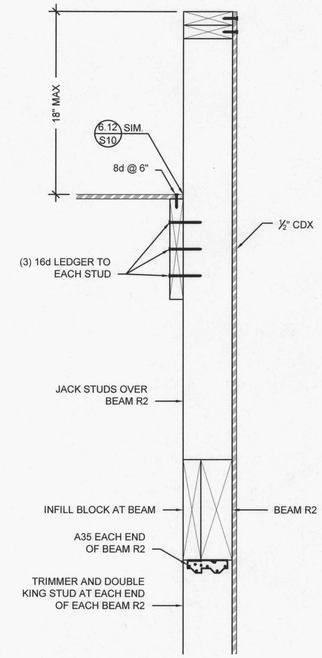


6.15 UPPER FLOOR WALL AT GRID LINE C
ROOF TO WALL PARALLEL TO JOISTS

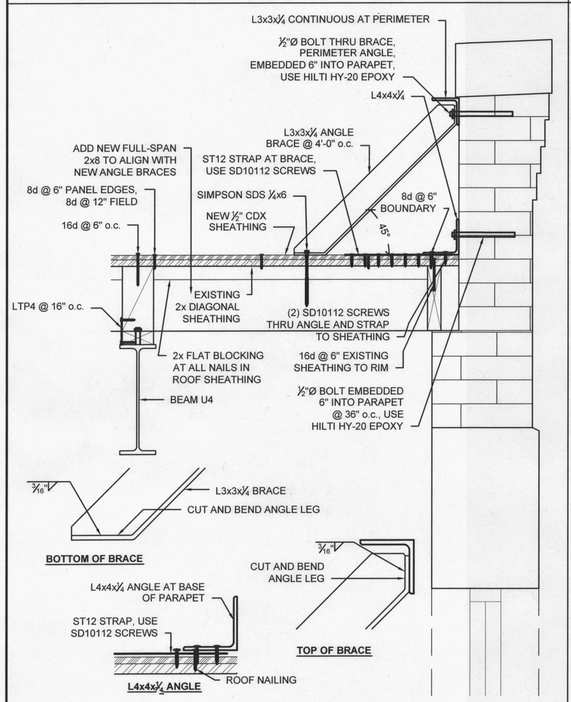


5.1 PARAPET BRACING
JOISTS PERPENDICULAR TO WALL

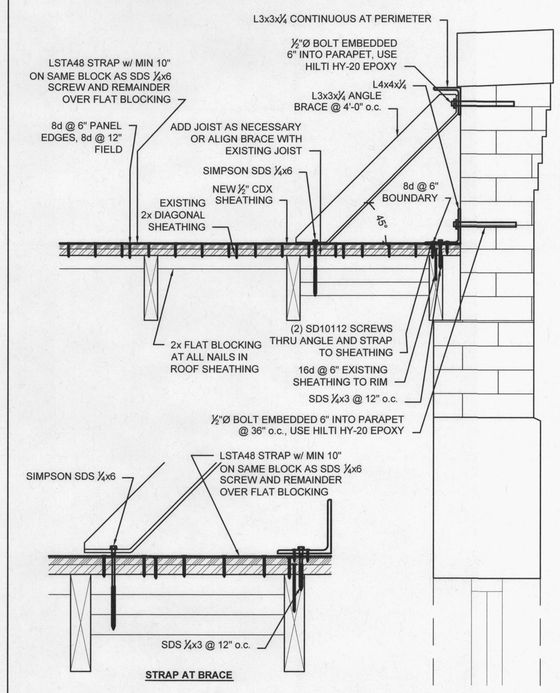


5.2 PARAPET BRACING
JOISTS PARALLEL TO WALL

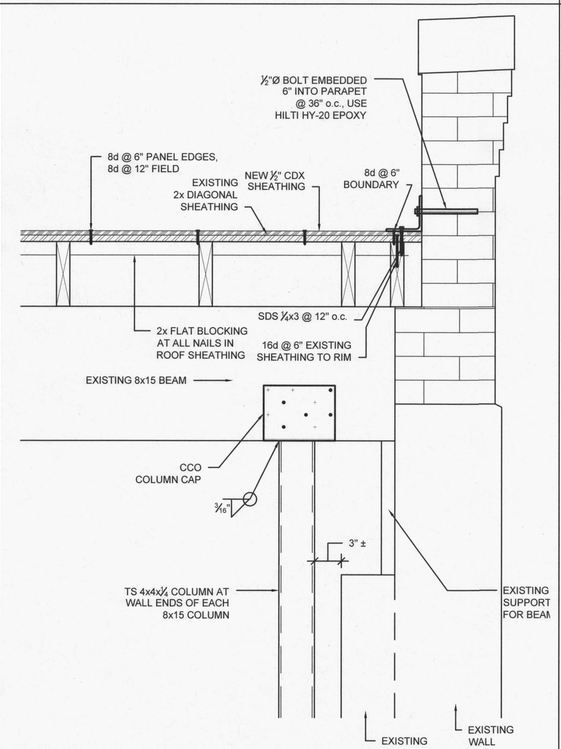


5.3 NEW COLUMN AT EXISTING 8x15 BEAMS
COLUMN AT BEAM CONNECTION

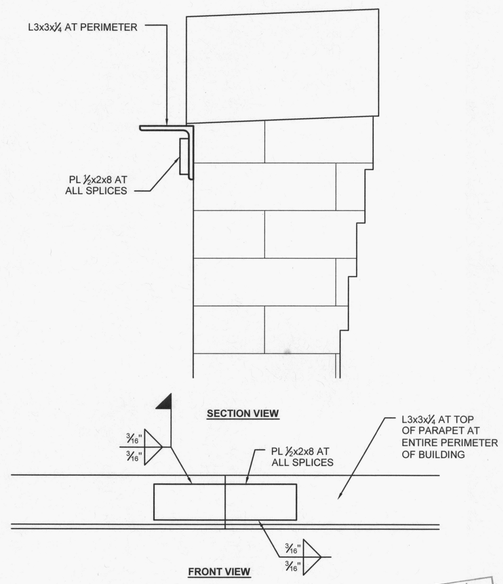


5.4 PARAPET BRACING
JOISTS PERPENDICULAR TO WALL

City of Portland REVIEWED FOR CODE COMPLIANCE MAR 29 2012 Permit Number

REGISTERED PROFESSIONAL ENGINEER 56230PE OREGON JAN 15, 2009 SCOTT T. OGREN
RENEWAL 12/31/2012


OGREN ENGINEERING
RESIDENTIAL AND COMMERCIAL STRUCTURES
3254 NE AINSWORTH ST
PORTLAND, OR 97211
503-281-0109
scott@ogreneng.com


| DRAWN BY: | CHECKED BY: |
|---|---|
| STO | STO |
| SCALE: | ISSUE DATE: |
| NONE | 12/6/11 |

REVISIONS:

| | | |
|---|---|---|
| 1 | STO | 12/12/11 |
| 2 | STO | 12/16/11 |
| 3 | STO | 1/16/12 |
| 4 | STO | 2/3/12 |
| 5 | STO | 2/17/12 |
| 6 | STO | 3/21/12 |

# 235 NW PARK
THE LEMON HOTEL LLC

BASEMENT DETAILS
GENERAL NOTES

1118.DWG

S8

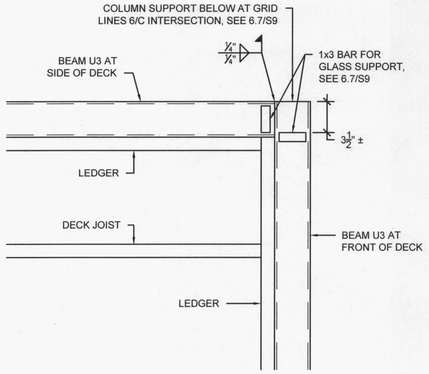


6.20 TUBE STEEL BEAMS AT DECK
CORNER CONNECTION PLAN VIEW

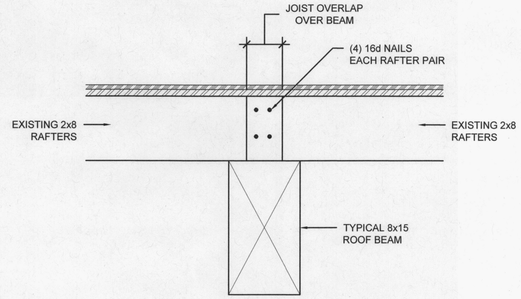


6.2 ROOF JOISTS AT 8x15 BEAM

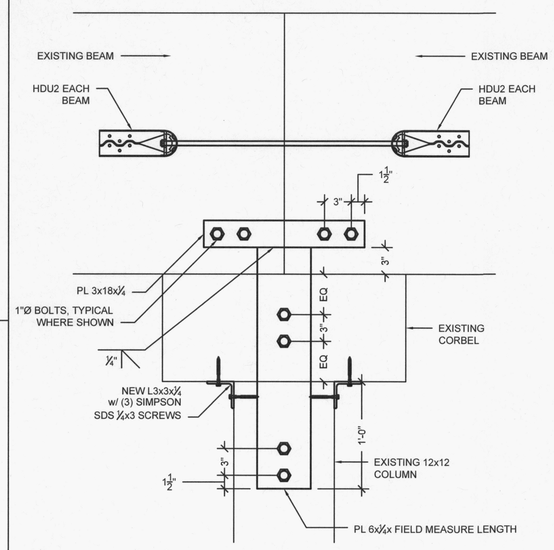


6.3 ROOF JOISTS AT 16x30 BEAM

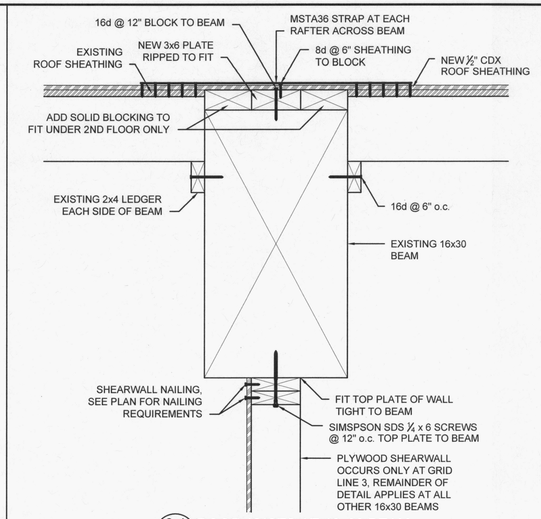


6.4 ROOF JOISTS AT 16x30 BEAM

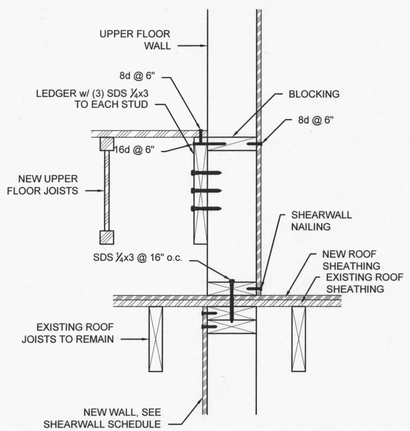


6.5 SHEARWALL AT GRID LINE C
TYPICAL TOP OF WALL CONNECTION TO UPPER FLOOR

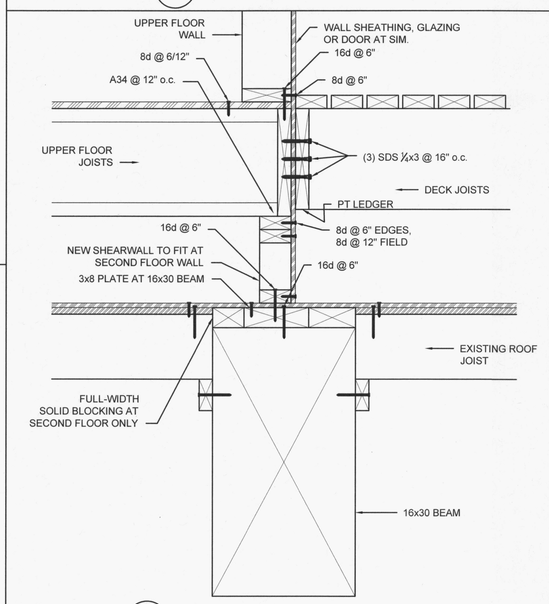


6.16 WALL AT GRID LINE 2 AND 6
DECK JOISTS TO FLOOR JOISTS

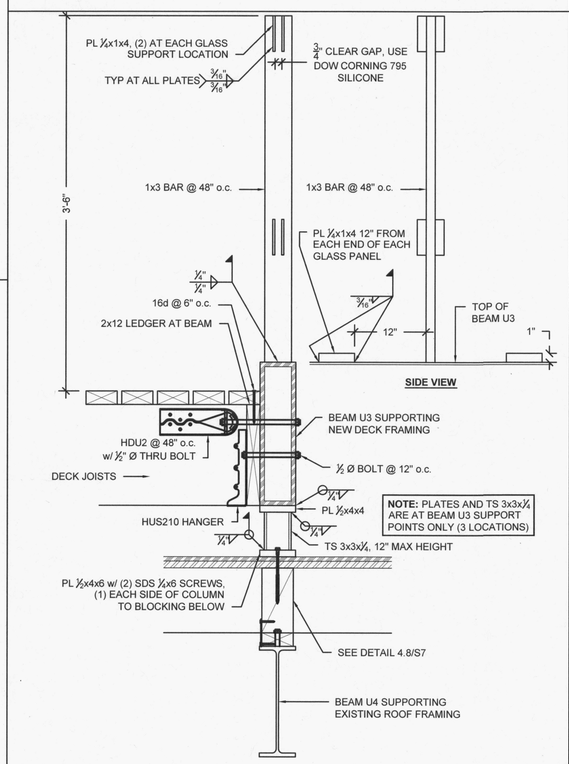


6.7 BEAM AT FRONT EDGE OF DECK

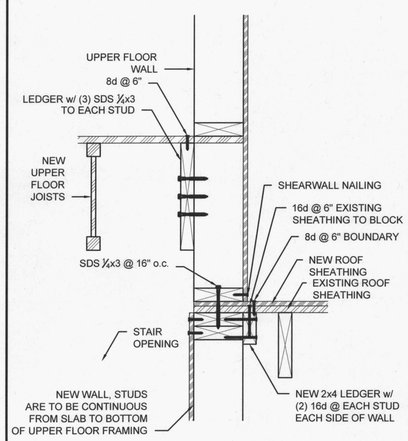


6.12 SHEARWALL AT GRID LINE C
TOP OF WALL CONNECTION TO UPPER FLOOR AT STAIR OPENING

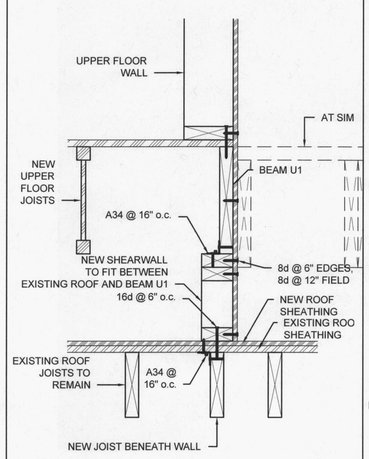


6.13 WALL AT GRID LINE C
UPPER FLOOR WALL CONNECTION TO LOWER ROOF

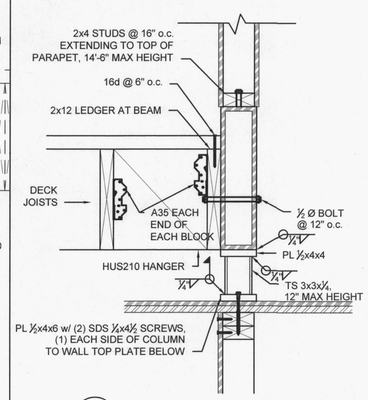


6.19 BEAM AT SIDE EDGE OF DECK
WOOD WALL PORTION

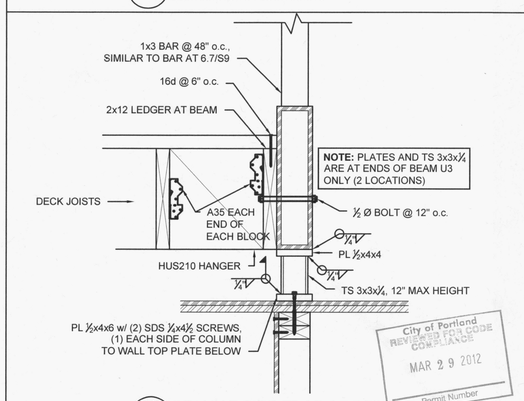


City of Portland
REVIEWED FOR CODE COMPLIANCE
MAR 29 2012
Permit Number

6.18 BEAM AT SIDE EDGE OF DECK
GLASS WALL PORTION

REGISTERED PROFESSIONAL ENGINEER 56230PE
OREGON JAN 15, 2002 SCOTT T. OGREN
RENEWAL 12/31/2012


OGREN ENGINEERING
RESIDENTIAL AND COMMERCIAL STRUCTURES
3254 NE AINSWORTH ST
PORTLAND, OR 97211
503-281-0109
scott@ogreneng.com


| DRAWN BY: | CHECKED BY: |
|---|---|
| STO | STO |
| SCALE: | ISSUE DATE: |
| NONE | 12/6/11 |

REVISIONS:

| | | |
|---|---|---|
| 1 | STO | 12/12/11 |
| 2 | STO | 12/16/11 |
| 3 | STO | 1/16/12 |
| 4 | STO | 2/3/12 |
| 5 | STO | 2/17/12 |
| 6 | STO | 3/21/12 |

# 235 NW PARK
THE LEMON HOTEL LLC

BASEMENT DETAILS
GENERAL NOTES

1118.DWG

S9

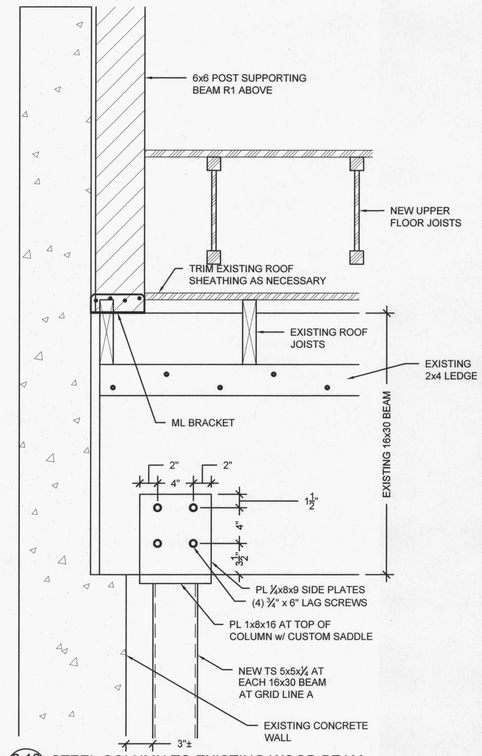


6.10 STEEL COLUMN TO EXISTING WOOD BEAM

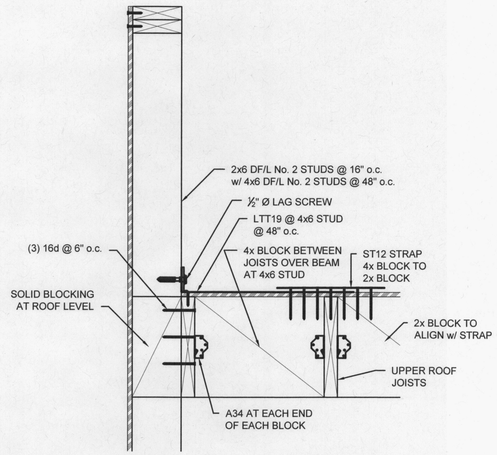


6.12 4x6 STUD @ UPPER FLOOR PARAPET

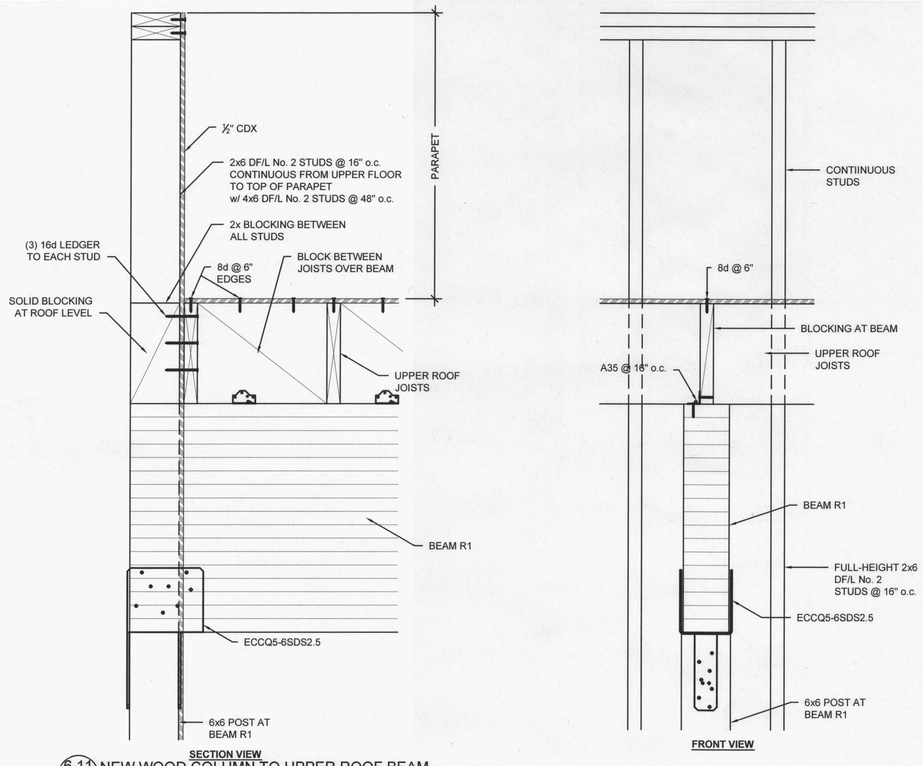


6.11 NEW WOOD COLUMN TO UPPER ROOF BEAM

GENERAL

1. The Contractor shall verify all dimensions with on-site conditions and drawings of others before commencing.

2. Shop drawings, including sealed calculations, shall be submitted for the following items:

Miscellaneous steel structural connections
Glued-laminated wood members
Prefabricated floor and roof joists/trusses

3. The Contractor is responsible for adequate bracing of the structure and parts thereof for wind, earthquake and construction forces until all structural components are permanently connected.

4. All work shall conform to OSSC 2010.

5. Where details are not specifically shown, construction shall follow typical details for similar conditions, subject to review by the architect or engineer.

6. The engineer and the architect have not been retained to provide services relating to any temporary construction conditions such as erection methods, bracing, shoring, rigging, scaffolding, formwork, or any safety related items.

DESIGN LOADS

| | |
|---|---|
| Roof | 25 PSF plus snow drift |
| Floors | 100 PSF LL |
| Wind | 100 MPH Exposure B |
| Seismic | Design Category D |
| | Ss = 0.983 S1 = 0.345 |
| | R = 6.0 Ωo = 2.0 |
| | Cd = 5 |

FOUNDATIONS

1. Foundations are proportioned for a maximum bearing pressure of 1500 PSF.

2. Footings shall be constructed on undisturbed soil or existing concrete slabs. Any overexcavation shall be backfilled with granular material compacted to 92% ASTM D-1557 maximum dry density. Base of footings shall be a minimum of 18 inches below finished grade and a minimum of 12 inches below existing grade.

3. Where unsuitable or suspect subgrade is exposed, overexcavate to a competent subgrade per field recommendation geotechnical engineer.

4. Provide 1/2-inch diameter x 10 inches long anchor bolts for walls within 12 inches of all corners and ends, and spaced at 72 inches maximum between, unless shown otherwise. Anchor bolts shall have 3" x 3" x 1/4" plate washers minimum. See wood notes for washer & bolt galvanizing requirements. Mud sill shall not be notched for anchor bolt washer or nut.

5. Provide 4 inches min. compacted sand or crushed rock sub-base under slabs on grade.

6. Refer to shearwall drawings for special holdowns, if any. These shall be cast into the footings unless permission is obtained from the Engineer for drilled and epoxied systems. Note that this requires coordination with the location of studs in the walls above.

CONCRETE

1. Basement walls and foundations not exposed to the weather shall develop a minimum 28-day compressive strength f'c = 2500 psi.

2. Basement slabs and interior slabs on grade, except garage floor slabs shall develop a minimum 28-day compressive strength f'c = 2500 psi.

3. Basement walls, foundation walls, exterior walls and other vertical concrete surfaces exposed to weather shall develop a minimum 28-day compressive strength f'c = 3000 psi with 4% to 6% air entrainment.

4. Driveways, curbs, walks, patios, porches, carport slabs, steps and other flatwork exposed to the weather, and garage floor slabs shall develop a minimum 28-day compressive strength f'c = 3000 psi with 4% to 6% air entrainment.

5. Concrete work shall conform to ACI Manual of Concrete Practice. Follow ACI 306R-88 when pouring concrete in cold weather.

6. Concrete work shall conform to ACI Manual of Concrete Practice, 1993 Edition. Follow ACI 306R-88 when pouring concrete in cold weather.

REINFORCING STEEL

1. All reinforcing steel (rebar) shall conform to IBC 1903 Grade 60.

2. Continuous horizontal bars shall be lapped 2'-6" minimum, embedded 2'-6" into adjacent footings, and spliced around corners.

3. Welded wire fabric shall conform to ASTM 185, and shall be chaired for 1.5 inches cover to top of slab.

4. All rebar shall be fabricated and placed in accordance with ACI Detailing Manual 315.

5. Cover to rebar from concrete surfaces shall be as follows except where shown otherwise:

| | |
|---|---|
| From bottom of footing | 3" + or - 1/2" |
| From earth face of wall | 1 1/2" + or - 1/4" |
| From open face of wall | 1" + or - 1/4" |
| Columns | 1 1/2" to ties |

GLUED-LAMINATED MEMBERS

1. All glued-laminated members shall be Douglas Fir 2400 Fb bending stress, Combination 24-F-V4 for simple spans, 24-F-V8 for cantilevers, DF/DF, Visually Graded Western Species as listed in 1991 NDS Tables 5A, 5B, and 5C.

2. Members called out as Teclams, Micro-lams, or Parallams shall be documented by ICC reports confirming design stresses Fb = 2800 psi, Fv = 285 psi and E = 1800000 psi.

WOOD FRAMING

1. All framing lumber shall be western woods graded to Standard Western Lumber Grading Rules.

2. Use the following grades unless noted otherwise:

| | | | |
|---|---|---|---|
| Studs | HF No. 2 | Fb = | 850 psi |
| | | Fc = | 1250 psi |
| Floor, roof joists | DF No. 2 | Fb = | 875 psi |
| Beams 4x | DF No. 1 | Fb = | 1000 psi |
| Beams 6x | DF No. 1 | Fb = | 1350 psi |
| Posts 6x, 8x | DF No. 1 | Fc = | 1200 psi |

3. Structural drawings show plywood shearwalls, and minimum plywood, nailing, end holdown and anchor bolt requirements, if any. Nail exterior plywood walls 8d at 6 inches edges, 8d at 12 inches field, unless shown otherwise.

4. Nail roof sheathing 8d at 6 inches edges, 8d at 12 inches field, and floor sheathing 10d at 6 inches edges, 10d at 12 inches field, unless shown otherwise.

5. Nailing shall follow IBC Table 2304.9.1 except as above or shown otherwise. Wall top plates shall be lapped 36 inches minimum and nailed (10)-16d each side of the top plate joint.

6. Simpson connector designations are used. Other connectors with ICC equivalency may be used.

7. Fasteners for pressure preservative and fire-retardant-treated wood shall be of hot-dipped galvanized steel, stainless steel, silicon bronze or copper. Exception: 1/2" diameter or greater steel bolts.

STEEL MEMBERS AND CONNECTIONS

1. All steel shall conform to the following specifications unless otherwise noted:

| | |
|---|---|
| W-shapes other than moment resisting frames | ASTM A36, A572 Grade B, or A992 |
| Moment Resisting Frames | ASTM A992 |
| Plates | ASTM A36, A572 Grade B, or A992 |
| TS-shapes | ASTM A500 Grade B |

2. Weld with E70XX electrodes. Rigid moment connections in steel moment frames shall have complete joint penetration (CJP) welds using E70-XX electrodes with Charpy v-notch toughness rating of 20 ft.-lbs at 0 degrees F. Remove all runoff tabs. Remove back-up bars per details.

3. Fabrication and erection shall conform to AISC Steel Construction Manual, 9th Edition.

4. Moment frames are WUF-W prequalified welded fully restrained connections, and shall be fabricated, specially inspected, and tested in accordance with FEMA 350 and 353 guidelines.

ANCHORED MASONRY VENEER

1. Anchored masonry veneer shall conform to IBC 1404.4, 1505.9, 1405.9 and 2308.11.2. In particular, ties shall be corrosion resistant, and if made of sheet metal, shall have a minimum thickness of 0.030 inches (No. 22 galv. gauge) or, if of wire, shall have a minimum diameter of 0.148 inches (No. 9 B.W. gauge). Ties shall be spaced at 12 inches vertically and 16 inches horizontally. Ties shall have a lip or hook on the extended leg that will engage or enclose a horizontal joint reinforcement wire of 0.148 inches diameter or equivalent. The joint reinforcement shall be continuous, with butt splices between ties permitted. Ties shall have ICC certification.

SPECIAL INSPECTION/INSPECTOR REQUIREMENTS (IBC 1701)
REQUIREMENTS FOR SPECIAL INSPECTION:

1. Special Inspector: Employed by the Owner (IBC 1704.1).

2. Reports: Submitted to the Building Official and Ogren Engineering, LLC. All discrepancies shall be brought to the immediate attention of the contractor for correction; then, if not corrected, to the building official and Ogren Engineering, LLC (IBC 1704.1.2).
3. The Special Inspection is to be continuous during the performance of the work unless otherwise specified.
4. Certification: Inspector must be certified by the Building Official to perform the types of inspections specified.

SUMMARY OF STRUCTURAL CONTINUOUS AND PERIODIC SPECIAL INSPECTIONS

The construction inspections listed are in addition to the inspections required by IBC section 109. Special Inspection is not a substitute for inspection by the Building Official. Specially inspected work that is installed or covered without the approval of the Building Official and the Special Inspector is subject to removal or exposure.

1. Responsibility: It is the responsibility of the General Contractor to inform the Special Inspector or Inspection Agency with adequate lead time prior to performing any work that requires Special Inspection.

1. SPECIAL INSPECTIONS:
   A) CONCRETE (IBC 1704.4): During the taking of test specimens and placing of reinforced concrete.

   B) BOLTS INSTALLED IN CONCRETE (IBC Table 1704.4): Prior to and during the placement of concrete around bolts.

   C) REINFORCING STEEL (IBC Table 1704.4): Prior to closing of the forms and delivery of concrete for all concrete specified to have special inspection.

   D) STRUCTURAL STEEL (IBC 1704.3): During the welding of any member or connection. Pre qualified welded fully restrained WUF-W moment frame connections shall follow FEMA 350 and 353 guidelines.

   E) DIAPHRAGMS: Periodic nailing inspection for all roof and floor diaphragms including collectors, chord straps, nailing, and blocking.

   F) SHEARWALLS: Periodic nailing inspection for all walls as noted on the Shearwall Schedule.

   G) EPOXY FILLED ANCHOR BOLT HOLES: Continuous inspection for all epoxy installation.

SPECIAL STRUCTURAL OBSERVATIONS BY OGREN ENGINEERING, LLC (IBC 1709)

2. NOTIFICATION: 48 hours before observation. Delinquent notification may require demolition of covering materials to facilitate observation.

3. OBSERVATIONS BY OGREN ENGINEERING, LLC:
   I) Reinforcing steel before concrete placement
   J) Before installation of holdown anchors in concrete
   K) Before pouring of concrete walls
   L) After completion of rough framing but before siding, roofing, or veneer
   M) After installation of steelwork

4. WRITTEN STATEMENT (IBC 1709): Ogren Engineering, LLC will submit to the Building Official a written statement that the site visits have been made and identifying any reported deficiencies which, to the best of our knowledge, have not been resolved.

City of Portland
REVIEWED FOR CODE COMPLIANCE
MAR 29 2012
Permit Number

REGISTERED PROFESSIONAL ENGINEER
56230PE
OREGON
JAN 15, 2002
SCOTT T. OGREN
RENEWAL 12/31/2012


OGREN ENGINEERING
RESIDENTIAL AND COMMERCIAL STRUCTURES
3254 NE AINSWORTH ST
PORTLAND, OR 97211
503-281-0109
scott@ogreneng.com


| DRAWN BY: | CHECKED BY: |
|---|---|
| STO | STO |
| SCALE: | ISSUE DATE: |
| NONE | 12/6/11 |

REVISIONS:

| | | |
|---|---|---|
| 1 | STO | 12/12/11 |
| 2 | STO | 12/16/11 |
| 3 | STO | 1/16/12 |
| 4 | STO | 2/3/12 |
| 5 | STO | 2/17/12 |

# 235 NW PARK
THE LEMON HOTEL LLC

BASEMENT DETAILS
GENERAL NOTES

1118.DWG

S10

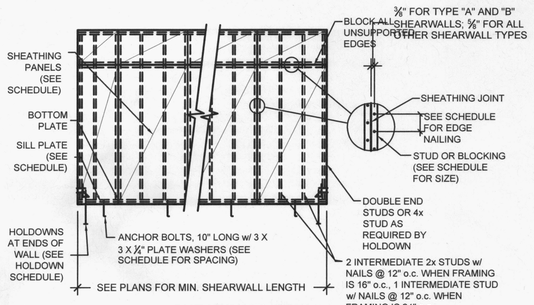


## SHEARWALL DETAIL

SCALE: NONE

| TYPE | SHEATHING [1, 2] | SIDES | STUDS/ BLKG[5] | BTM. PLATE | SILL PLATE | EDGE NAILING [6, 7] | BOTTOM[11] PLATE NAILING | SILL PLATE ANCHOR BOLTS [3, 4, 9] | LTP4 @ | W/S CAPACITY (plf)[8] |
|---|---|---|---|---|---|---|---|---|---|---|
| A | 15/32" CDX | ONE | 2x | 2x | 2x | 8d @ 6" | 16d @ 4" | ⅝" ø @ 3'-0" | 24" | 360/260 |
| B | 15/32" CDX | ONE | 2x | 2x | 2x | 8d @ 4" | 16d @ 3" | ⅝" ø @ 2'-0" | 16" | 530/350 |
| C | 15/32" CDX | ONE | 3x[10] | 2x | 2x | 8d @ 3" | 16d @ 2" | ⅝" ø @ 1'-2" | 12" | 690/490 |
| D | 15/32" CDX | ONE | 3x | 2x | 2x | 8d @ 2" | 16d @ 1.5" | ⅝" ø @ 0'-11" | 9" | 900/600 |
| E | 15/32" CDX | ONE | 3x | 2x | 3x | 10d @ 2" | SDS ¼ X 4 ½ @ 5" | ⅝" ø @ 1'-4" | 7" | 1080/770 |
| F | 15/32" CDX | TWO | 3x | 2x | 3x | 8d @ 3" | SDS ¼ X 4 ½ @ 4" | ⅝" ø @ 1'-0" | 6" | 1370/980 |
| G | 15/32" CDX | TWO | 3x | 2x | 3x | 8d @ 2" | SDS ¼ X 4 ½ @ 3" | ⅝" ø @ 0'-9" | 4.5" | 1790/1280 |

1. All exterior walls & roof shall be sheathed with 15/32" CDX or 7/16" OSB and nailed 8d @ 6" edges, 8d@ 12" field.
2. 7/16" APA-Rated OSB is an acceptable substitute for 15/32" CDX.
3. 1/2" ϕ anchor bolts @ 6'-0" o.c. except as noted.
4. Foundation vents are acceptable under shearwalls. Anchor bolts shall be placed 3" clear of foundation vents. Any two adjacent vents must have at lease 12" of conc. between. Anchor bolt spacing may vary, but sched. average spacing shall be maintained.
5. Studs and blocking specified as 3x shall be single 3" nominal lumber at intermediate abutting sheathing joints only, others may be 2x studs and blocking. **Double 2x members are NOT an acceptable substitute for 3x material, per code requirements.**
6. 8d nails shall be 0.131 dia. x 2 1/2" common wire or galvanized box (hot-dipped or tumbled) nails.
7. 10d nails shall be 0.148 dia. x 3" common wire or galvanized box (hot-dipped or tumbled) nails.
8. Schedule utilizes the permitted 40% increase for wind loads per IBC 2306.4.1.
9. Shearwalls w/ seismic load >350 & <600 plf utilize dbl. sill pl. anchors req'd for 2x sill plate material per IBC 2305.3.10 Exception.
10. 3x material is not required for all loading conditions. Refer to structural plans for exceptions, if any.
11. Staggerd fasteners.

## 7.1 SHEARWALL SCHEDULE - IBC

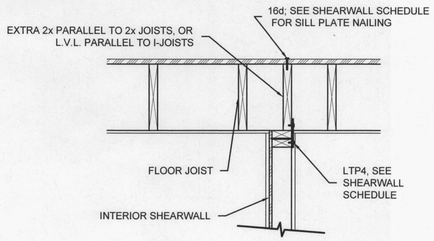


INTERIOR SHEARWALL PARALLEL TO FLOOR JOISTS

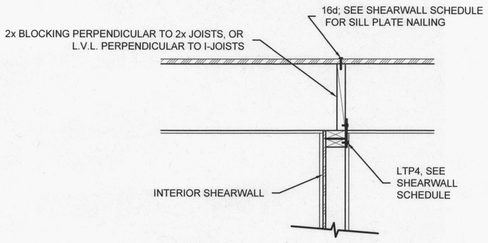


INTERIOR SHEARWALL PERPENDICULAR TO FLOOR JOISTS

## 7.2 INTERIOR SHEARWALLS PARALLEL AND PERPENDICULAR TO FLOOR JOISTS

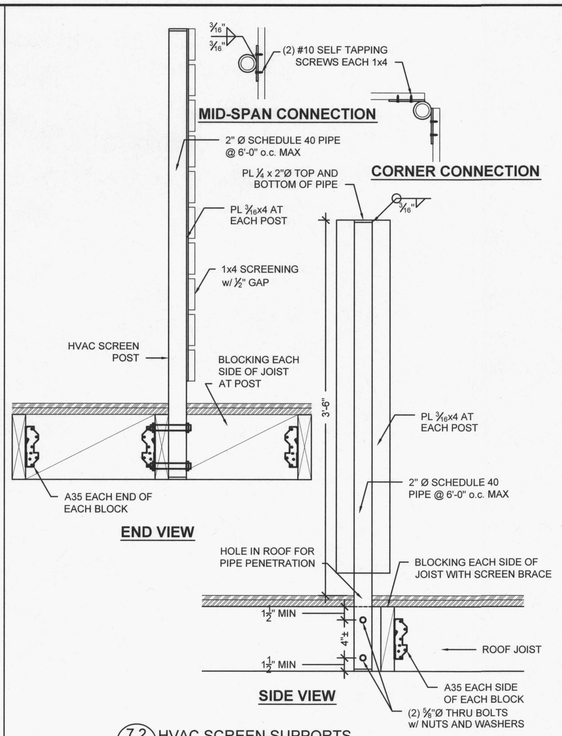


## 7.2 HVAC SCREEN SUPPORTS

| HOLDOWN | Min. Concrete Wall Thickness (No.'s 4-8, 16-18) | CAPACITY (lb) 6" | 8" | N/A |
|---|---|---|---|---|
| 1 | **MSTC28 or HDU2 w/ 5/8"ϕ A36 THREADED ROD** from double stud or beam below to double stud at end of shearwall above. | | | 1310 |
| 2 | **MSTC40 or HDU2 w/ 5/8"ϕ A36 THREADED ROD** from double stud or beam below to double stud at end of shearwall above. | | | 2945 |
| 3 | **MSTC52 or HDU4 w/ 5/8"ϕ A36 THREADED ROD** from double stud or beam below to double stud at end of shearwall above. | | | 3925 |
| 4 | **MSTC66 or HDU8 w/ 7/8"ϕ A36 THREADED ROD** from double stud or beam below to double stud at end of shearwall above. | | | 5800 |
| 5 | **MSTC78 or HDU8 w/ 7/8"ϕ A36 THREADED ROD** from double stud or beam below to double stud at end of shearwall above. | | | 5860 |
| 6 | **5/8"ϕ A36 SSTB16 ROD** embedded 12" into concrete foundation, offset to align with **HDU2** on double stud at end of shearwall above. | 3075 | | |
| 7 | **5/8"ϕ A36 SSTB20 ROD** embedded 16" into concrete foundation, offset to align with **HDU4** on double stud at end of shearwall above. | 4565 | | |
| 8 | **5/8"ϕ A36 SSTB24 ROD** embedded 20" into concrete foundation, offset to align with **HDU5** on double stud at end of shearwall above. | 5645 | | |
| 9 | **7/8"ϕ A36 SSTB28 ROD** embedded 24" into concrete foundation, offset to align with **HDU8** on (2) 2x stud at end of shearwall above. | 5980 | | |
| 10 | **SB1x30 ROD w/ NUT** embedded 24" into concrete foundation, offset to align with **HDU11** on (2) 2x stud at end of shearwall above. (10" min. conc. wall thickness). | | 9535 | |
| 11 | **SB1x30 ROD w/ NUT** embedded 24" into concrete foundation, offset to align with **HHDQ11** on (2) 2x stud at end of shearwall above. (10" min. conc. wall thickness). | | 11,810 | |
| 12 | **SB1x30 ROD w/ NUT** embedded 24" into concrete foundation, offset to align with **HHDQ14** on (2) 2x stud at end of shearwall above. (10" min. conc. wall thickness). | | 13,710 | |
| 13 | **SB1x30 ROD w/ NUT** embedded 24" into concrete foundation, offset to align with **HDU14** on (2) 2x stud at end of shearwall above. (12" min. conc. wall thickness). | | 14,925 | |

## 8.1 SHEARWALL HOLDOWN SCHEDULE

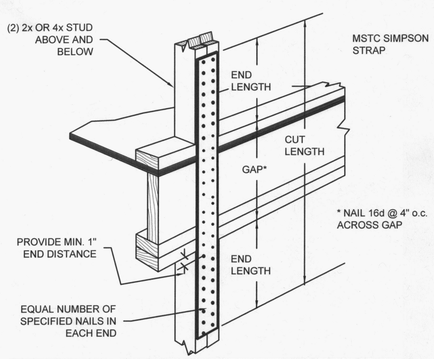


| HOLDOWN MARK | DESIGNATION | 16d NAILS EACH END | DESIGN LOAD |
|---|---|---|---|
| 1 | MSTC28 | 8 | 1310 |
| 2 | MSTC40 | 18 | 2945 |
| 3 | MSTC52 | 24 | 3925 |
| 4 | MSTC66 | 34 | 5800 |
| 5 | MSTC78 | 38 | 5860 |

## 8.2 MSTC STRAPS FOR WIND/SEISMIC LOADS

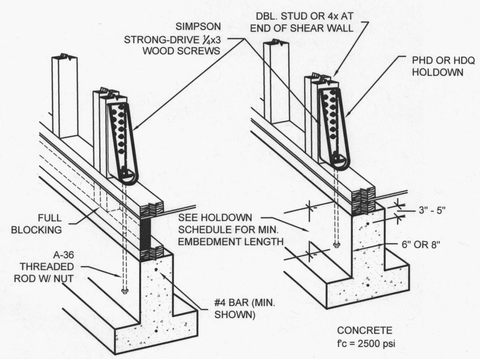


| HOLDOWN TYPE | SIMPSON MODEL # | No. OF SIMPSON SDS¼x2½" WOOD SCREWS | THREADED ROD ϕ | MIN. ROD EMBEDMENT IN CONCRETE |
|---|---|---|---|---|
| 6 | HDU2 | 6 | ⅝" | 10" |
| 7 | HDU4 | 10 | ⅝" | 10" |
| 8 | HDU5 | 14 | ⅝" | 15" |
| 9 | HDU8 | 20 | ⅞" | 15" |
| 10 | HDU11 | 30 | 1" | 18" |
| 11 | HHDQ11 | 24 | 1" | 18" |
| 12 | HHDQ14 | 30 | 1" | 18" |
| 13 | HDU14 | 36 | 1" | 18" |

## 8.4 HDU AND HHDQ HOLDOWNS FOR WIND/SEISMIC LOADS

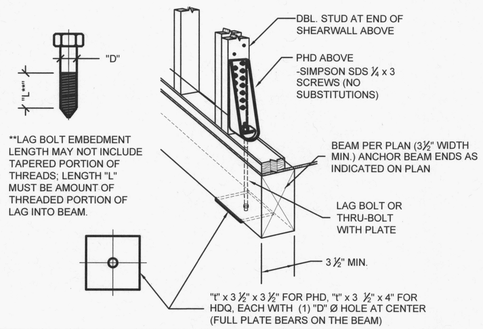


| MODEL NO. | | NO. OF SIMPSON SDS ¼" x 2½" WOOD SCREWS | DESIGN LOAD (lb) | LAG BOLT OPTION BOLT "D" | LAG BOLT OPTION EMBEDMENT LENGTH "L" | STEEL PLATE OPTION ANCHOR DIA. | STEEL PLATE OPTION PLATE "t" | STEEL PLATE OPTION HOLE "D" |
|---|---|---|---|---|---|---|---|---|
| HDU2 | 6 | 6 | 3075 | ⅝" | 8" | ⅝" | ⅜" | 11/16" |
| HDU4 | 7 | 10 | 4565 | ⅝" | 9" | ⅝" | ⅜" | 11/16" |
| HDU5 | 8 | 14 | 5645 | " | 12" | ⅝" | ½" | 11/16" |
| HDU8 | 9 | 20 | 5980 | ⅞" | 12" | ⅞" | ½" | 15/16" |
| HDU11 | 10 | 30 | 9535 | 1" | 15" | 1" | ½" | 1 1/16" |
| HHDQ11 | 11 | 24 | 11,810 | 1" | 18" | 1" | ½" | 1 1/16" |
| HHDQ14 | 12 | 30 | 13,710 | 1" | 21" | 1" | ½" | 1 1/16" |
| HDU14 | 13 | 36 | 14,925 | 1" | 24" | 1" | ½" | 1 1/16" |

## 8.8 HOLDOWN AT BEAM

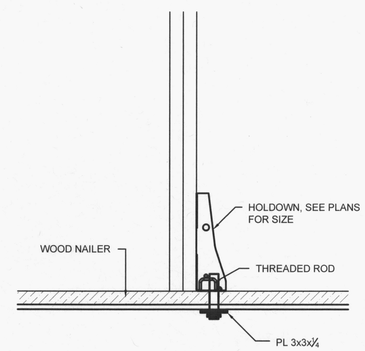


BEAM AT STEEL FRAME

## 8.9 HOLDOWN @ STEEL BEAM

City of Portland REVIEWED FOR CODE COMPLIANCE MAR 29 2012 Permit Number

REGISTERED PROFESSIONAL ENGINEER 56230PE OREGON JAN 15, 2002 SCOTT T. OGREN RENEWAL 12/31/2012


OGREN ENGINEERING
RESIDENTIAL AND COMMERCIAL STRUCTURES
3254 NE AINSWORTH ST
PORTLAND, OR 97211
503-281-0109
scott@ogreneng.com


| DRAWN BY: | CHECKED BY: |
|---|---|
| STO | STO |
| SCALE: | ISSUE DATE: |
| NONE | 12/6/11 |

REVISIONS:

| | | |
|---|---|---|
| 1 | STO | 12/12/11 |
| 2 | STO | 12/16/11 |
| 3 | STO | 1/16/12 |
| 4 | STO | 2/3/12 |
| 5 | STO | 3/5/12 |

# 235 NW PARK
THE LEMON HOTEL LLC

BASEMENT DETAILS
GENERAL NOTES

1118.DWG

S11