Zarosinski Engineering and Design
1400 NW 155th Circle
Vancouver, WA 98685
360-513-2746
Email: dzaro@zaroeng.com
By Dean P. Zarosinski PE

Title :
Engineer: Dean P. Zarosinski
Project Desc.:

Job # J0222-1 Timurland Co

Project Information

File: c:\AA WORK\2012 PROJECTS\J0221-2 Timurland Const\Calculations\j0222-1 calcs.ec6
ENERCALC, INC. 1983-2011, Build:6.12.3.14, Ver:6.12.3.14

Lic. # : KW-06009383 **Licensee : Zarosinski Engineering and Design, Inc.**

Project Title : WINDSOR KITCHEN OPENING
Description :

I.D. : J0222-1 Timurland Const. LLC
Address : 5515 SW Windsor Ct., Portland, OR

Project Leader : Dean P. Zarosinski
Phone : 360-513-2746 Fax : eMail : dzaro@zaroeng.com

Project Notes

REACTION = 4 K

X 2 ENDS = 8 K

PIER = 2'-0" SQUARE W (4) No 4 BARS EACH WAY

BASED ON 1.5 KSF SOIL BEARING

REGISTERED PROFESSIONAL ENGINEER 16478 OREGON JAN 16, 1983 DEAN P. ZAROSINSKI

EXPIRES: 6-30-12

City of Portland
REVIEWED FOR CODE COMPLIANCE
MAR 20 2012
Permit Number

Zarosinski Engineering and Design
1400 NW 155th Circle
Vancouver, WA 98685
360-513-2746
Email: dzaro@zaroeng.com
By Dean P. Zarosinski PE

Title :
Engineer: Dean P. Zarosinski
Project Desc.:

Job # J0222-1 Timurland Co

Wood Beam

File: c:\AA WORK\2012 PROJECTS\J0221-2 Timurland Const\Calculations\j0222-1 calcs.ec6
ENERCALC, INC. 1983-2011, Build:6.12.3.14, Ver:6.12.3.14

Lic. # : KW-06009383 **Licensee : Zarosinski Engineering and Design, Inc.**

Description : 10' Kitchen Beam

Material Properties

Calculations per NDS 2005, ASCE 7-05

Analysis Method : Allowable Stress Design
Load Combination 2006 IBC & ASCE 7-05

Wood Species : DF/DF
Wood Grade : 24F - V4

Beam Bracing : Beam is Fully Braced against lateral-torsion buckling

Fb - Tension	2400 psi
Fb - Compr	1850 psi
Fc - Prll	1650 psi
Fc - Perp	650 psi
Fv	265 psi
Ft	1100 psi

E : Modulus of Elasticity

Ebend- xx	1800 ksi
Eminbend - xx	930 ksi
Ebend- yy	1600 ksi
Eminbend - yy	830 ksi
Density	32.21 pcf

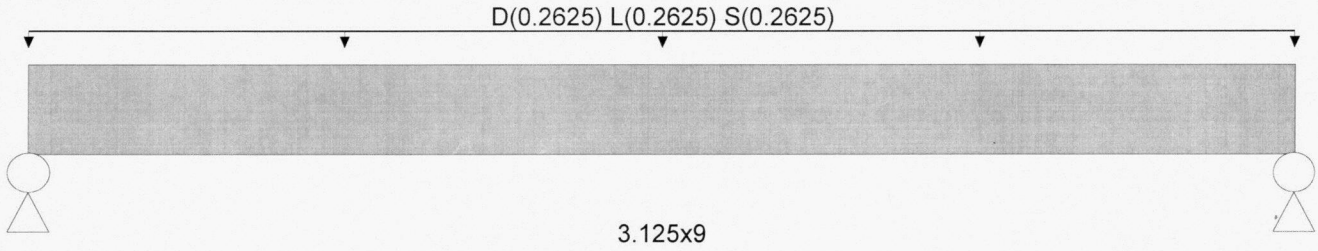

Span = 10.0 ft

Applied Loads

Service loads entered. Load Factors will be applied for calculations.

Uniform Load : D = 0.0250, L = 0.0250, S = 0.0250 ksf, Tributary Width = 10.50 ft

DESIGN SUMMARY

Design OK

Maximum Bending Stress Ratio	=	0.972 : 1	Maximum Shear Stress Ratio	=	0.568 : 1
Section used for this span		3.125x9	Section used for this span		3.125x9
fb : Actual	=	2,333.33 psi	fv : Actual	=	150.50 psi
FB : Allowable	=	2,400.00 psi	Fv : Allowable	=	265.00 psi
Load Combination		+D+0.750L+0.750S+H	Load Combination		+D+0.750L+0.750S+H
Location of maximum on span	=	5.000 ft	Location of maximum on span	=	9.300 ft
Span # where maximum occurs	=	Span # 1	Span # where maximum occurs	=	Span # 1

Maximum Deflection

Max Downward L+Lr+S Deflection	0.348 in	Ratio =	344
Max Upward L+Lr+S Deflection	0.000 in	Ratio =	0 <240
Max Downward Total Deflection	0.523 in	Ratio =	229
Max Upward Total Deflection	0.000 in	Ratio =	0 <180

City of Portland
REVIEWED FOR CODE COMPLIANCE
MAR 20 2012
Permit Number

Maximum Forces & Stresses for Load Combinations

Load Combination / Segment Length	Span #	Max Stress Ratios M	Max Stress Ratios V	C_d	$C_{F/V}$	C_r	C_m	C_t	C_L	Moment Values M	Moment Values fb	Moment Values Fb	Shear Values V	Shear Values fv	Shear Values Fv
+D												0.00	0.00	0.00	0.00
Length = 10.0 ft	1	0.389	0.227	1.000	1.000	1.000	1.000	1.000	1.000	3.28	933.33	2400.00	1.13	60.20	265.00
+D+L+H					1.000	1.000	1.000	1.000	1.000			0.00	0.00	0.00	0.00
Length = 10.0 ft	1	0.778	0.454	1.000	1.000	1.000	1.000	1.000	1.000	6.56	1,866.67	2400.00	2.26	120.40	265.00
+D+S+H					1.000	1.000	1.000	1.000	1.000			0.00	0.00	0.00	0.00
Length = 10.0 ft	1	0.778	0.454	1.000	1.000	1.000	1.000	1.000	1.000	6.56	1,866.67	2400.00	2.26	120.40	265.00
+D+0.750Lr+0.750L+H					1.000	1.000	1.000	1.000	1.000			0.00	0.00	0.00	0.00
Length = 10.0 ft	1	0.681	0.398	1.000	1.000	1.000	1.000	1.000	1.000	5.74	1,633.33	2400.00	1.98	105.35	265.00
+D+0.750L+0.750S+H					1.000	1.000	1.000	1.000	1.000			0.00	0.00	0.00	0.00
Length = 10.0 ft	1	0.972	0.568	1.000	1.000	1.000	1.000	1.000	1.000	8.20	2,333.33	2400.00	2.82	150.50	265.00
+D+0.750Lr+0.750L+0.750W+H					1.000	1.000	1.000	1.000	1.000			0.00	0.00	0.00	0.00
Length = 10.0 ft	1	0.681	0.398	1.000	1.000	1.000	1.000	1.000	1.000	5.74	1,633.33	2400.00	1.98	105.35	265.00
+D+0.750L+0.750S+0.750W+H					1.000	1.000	1.000	1.000	1.000			0.00	0.00	0.00	0.00
Length = 10.0 ft	1	0.972	0.568	1.000	1.000	1.000	1.000	1.000	1.000	8.20	2,333.33	2400.00	2.82	150.50	265.00
+D+0.750Lr+0.750L+0.5250E+H					1.000	1.000	1.000	1.000	1.000			0.00	0.00	0.00	0.00
Length = 10.0 ft	1	0.681	0.398	1.000	1.000	1.000	1.000	1.000	1.000	5.74	1,633.33	2400.00	1.98	105.35	265.00

Zarosinski Engineering and Design
1400 NW 155th Circle
Vancouver, WA 98685
360-513-2746
Email: dzaro@zaroeng.com
By Dean P. Zarosinski PE

Title :
Engineer: Dean P. Zarosinski
Project Desc.:

Job # J0222-1 Timurland Co

Wood Beam

File: c:\AA WORK\2012 PROJECTS\J0221-2 Timurland Const\Calculations\j0222-1 calcs.ec6
ENERCALC, INC. 1983-2011, Build:6.12.3.14, Ver:6.12.3.14

Lic. # : KW-06009383 **Licensee : Zarosinski Engineering and Design, Inc.**

Description : 10' Kitchen Beam

Load Combination		Max Stress Ratios								Moment Values			Shear Values		
Segment Length	Span #	M	V	C_d	$C_{F/V}$	C_r	C_m	C_t	C_L	M	fb	Fb	V	fv	Fv
+D+0.750L+0.750S+0.5250E+H					1.000	1.000	1.000	1.000	1.000			0.00	0.00	0.00	0.00
Length = 10.0 ft	1	0.972	0.568	1.000	1.000	1.000	1.000	1.000	1.000	8.20	2,333.33	2400.00	2.82	150.50	265.00

Overall Maximum Deflections - Unfactored Loads

Load Combination	Span	Max. "-" Defl	Location in Span	Load Combination	Max. "+" Defl	Location in Span
D+L+S	1	0.5227	5.050		0.0000	0.000

Vertical Reactions - Unfactored

Support notation : Far left is #1 Values in KIPS

Load Combination	Support 1	Support 2
Overall MAXimum	3.938	3.938
D Only	1.313	1.313
L Only	1.313	1.313
S Only	1.313	1.313
L+S	2.625	2.625
D+L	2.625	2.625
D+S	2.625	2.625
D+L+S	3.938	3.938

City of Portland
REVIEWED FOR CODE COMPLIANCE
MAR 20 2012
Permit Number

Zarosinski Engineering and Design
1400 NW 155th Circle
Vancouver, WA 98685
360-513-2746
Email: dzaro@zaroeng.com
By Dean P. Zarosinski PE

Title :
Engineer: Dean P. Zarosinski
Project Desc.:

Job # J0222-1 Timurland Co

General Footing

File: c:\AA WORK\2012 PROJECTS\J0221-2 Timurland Const\Calculations\j0222-1 calcs.ec6
ENERCALC, INC. 1983-2011, Build:6.12.3.14, Ver:6.12.3.14

Lic. # : KW-06009383 **Licensee : Zarosinski Engineering and Design, Inc.**

Description : Concrete footing handling two spans of roof. Add footing to take floor load

DESIGN SUMMARY

Design OK

	Min. Ratio	Item	Applied	Capacity	Governing Load Combination
PASS	0.6425	Soil Bearing	0.9638 ksf	1.50 ksf	+D+0.750L+0.750S+0.5250E+H
PASS	n/a	Overturning - X-X	0.0 k-ft	0.0 k-ft	No Overturning
PASS	n/a	Overturning - Z-Z	0.0 k-ft	0.0 k-ft	No Overturning
PASS	n/a	Sliding - X-X	0.0 k	0.0 k	No Sliding
PASS	n/a	Sliding - Z-Z	0.0 k	0.0 k	No Sliding
PASS	n/a	Uplift	0.0 k	0.0 k	No Uplift
PASS	0.03487	Z Flexure (+X)	0.5403 k-ft	15.494 k-ft	+1.20D+1.60L+0.50S+1.60H
PASS	0.03487	Z Flexure (-X)	0.5403 k-ft	15.494 k-ft	+1.20D+1.60L+0.50S+1.60H
PASS	0.03487	X Flexure (+Z)	0.5403 k-ft	15.494 k-ft	+1.20D+1.60L+0.50S+1.60H
PASS	0.03487	X Flexure (-Z)	0.5403 k-ft	15.494 k-ft	+1.20D+1.60L+0.50S+1.60H
PASS	0.02923	1-way Shear (+X)	2.402 psi	82.158 psi	+1.20D+1.60L+0.50S+1.60H
PASS	0.02923	1-way Shear (-X)	2.402 psi	82.158 psi	+1.20D+1.60L+0.50S+1.60H
PASS	0.02923	1-way Shear (+Z)	2.402 psi	82.158 psi	+1.20D+1.60L+0.50S+1.60H
PASS	0.02923	1-way Shear (-Z)	2.402 psi	82.158 psi	+1.20D+1.60L+0.50S+1.60H
PASS	0.06906	2-way Punching	11.348 psi	164.317 psi	+1.20D+1.60L+0.50S+1.60H

Detailed Results

Soil Bearing

Rotation Axis & Load Combination...	Gross Allowable	Xecc	Zecc	+Z	Actual Soil Bearing Stress +Z	-X	-X	Actual / Allowable Ratio
X-X, +D	1.50	n/a	0.0	0.4725	0.4725	n/a	n/a	0.315
X-X, +D+L+H	1.50	n/a	0.0	0.80	0.80	n/a	n/a	0.533
X-X, +D+Lr+H	1.50	n/a	0.0	0.6475	0.6475	n/a	n/a	0.432
X-X, +D+S+H	1.50	n/a	0.0	0.80	0.80	n/a	n/a	0.533
X-X, +D+0.750Lr+0.750L+H	1.50	n/a	0.0	0.8494	0.8494	n/a	n/a	0.566
X-X, +D+0.750L+0.750S+H	1.50	n/a	0.0	0.9638	0.9638	n/a	n/a	0.643
X-X, +D+0.750Lr+0.750L+0.750W+H	1.50	n/a	0.0	0.8494	0.8494	n/a	n/a	0.566
X-X, +D+0.750L+0.750S+0.750W+H	1.50	n/a	0.0	0.9638	0.9638	n/a	n/a	0.643
X-X, +D+0.750Lr+0.750L+0.5250E+H	1.50	n/a	0.0	0.8494	0.8494	n/a	n/a	0.566
X-X, +D+0.750L+0.750S+0.5250E+H	1.50	n/a	0.0	0.9638	0.9638	n/a	n/a	0.643
Z-Z, +D	1.50	0.0	n/a	n/a	n/a	0.4725	0.4725	0.315
Z-Z, +D+L+H	1.50	0.0	n/a	n/a	n/a	0.80	0.80	0.533
Z-Z, +D+Lr+H	1.50	0.0	n/a	n/a	n/a	0.6475	0.6475	0.432
Z-Z, +D+S+H	1.50	0.0	n/a	n/a	n/a	0.80	0.80	0.533
Z-Z, +D+0.750Lr+0.750L+H	1.50	0.0	n/a	n/a	n/a	0.8494	0.8494	0.566
Z-Z, +D+0.750L+0.750S+H	1.50	0.0	n/a	n/a	n/a	0.9638	0.9638	0.643
Z-Z, +D+0.750Lr+0.750L+0.750W+H	1.50	0.0	n/a	n/a	n/a	0.8494	0.8494	0.566
Z-Z, +D+0.750L+0.750S+0.750W+H	1.50	0.0	n/a	n/a	n/a	0.9638	0.9638	0.643
Z-Z, +D+0.750Lr+0.750L+0.5250E+H	1.50	0.0	n/a	n/a	n/a	0.8494	0.8494	0.566
Z-Z, +D+0.750L+0.750S+0.5250E+H	1.50	0.0	n/a	n/a	n/a	0.9638	0.9638	0.643

Overturning Stability

Rotation Axis & Load Combination...	Overturning Moment	Resisting Moment	Stability Ratio	Status

Footing Has NO Overturning

Sliding Stability

All units k

Force Application Axis Load Combination...	Sliding Force	Resisting Force	Sliding SafetyRatio	Status

Footing Has NO Sliding

City of Portland
REVIEWED FOR CODE COMPLIANCE
MAR 20 2012
Permit Number

Footing Flexure

Flexure Axis & Load Combination	Mu k-ft	Which Side ?	Tension @ Bot. or Top ?	As Req'd in^2	Gvrn. As in^2	Actual As in^2	Phi*Mn k-ft	Status
X-X, +1.40D	0.2292	+Z	Bottom	0.26	Bending	0.4	15.494	OK
X-X, +1.40D	0.2292	-Z	Bottom	0.26	Bending	0.4	15.494	OK
X-X, +1.20D+0.50Lr+1.60L+1.60H	0.5022	+Z	Bottom	0.26	Bending	0.4	15.494	OK
X-X, +1.20D+0.50Lr+1.60L+1.60H	0.5022	-Z	Bottom	0.26	Bending	0.4	15.494	OK
X-X, +1.20D+1.60L+0.50S+1.60H	0.5403	+Z	Bottom	0.26	Bending	0.4	15.494	OK

Zarosinski Engineering and Design
1400 NW 155th Circle
Vancouver, WA 98685
360-513-2746
Email: dzaro@zaroeng.com
By Dean P. Zarosinski PE

Title :
Engineer: Dean P. Zarosinski
Project Desc.:

Job # J0222-1 Timurland Co

General Footing

File: c:\AA WORK\2012 PROJECTS\J0221-2 Timurland Const\Calculations\j0222-1 calcs.ec6
ENERCALC, INC. 1983-2011, Build:6.12.3.14, Ver:6.12.3.14

Lic. # : KW-06009383 **Licensee : Zarosinski Engineering and Design, Inc.**

Description : Concrete footing handling two spans of roof. Add footing to take floor load

Footing Flexure

Flexure Axis & Load Combination	Mu k-ft	Which Side ?	Tension @ Bot. or Top ?	As Req'd in^2	Gvrn. As in^2	Actual As in^2	Phi*Mn k-ft	Status
X-X, +1.20D+1.60Lr+0.80W	0.3364	+Z	Bottom	0.26	Bending	0.4	15.494	OK
X-X, +1.20D+1.60Lr+0.80W	0.3364	-Z	Bottom	0.26	Bending	0.4	15.494	OK
X-X, +1.20D+0.50L+1.60S	0.5403	+Z	Bottom	0.26	Bending	0.4	15.494	OK
X-X, +1.20D+0.50L+1.60S	0.5403	-Z	Bottom	0.26	Bending	0.4	15.494	OK
X-X, +1.20D+1.60S+0.80W	0.4584	+Z	Bottom	0.26	Bending	0.4	15.494	OK
X-X, +1.20D+1.60S+0.80W	0.4584	-Z	Bottom	0.26	Bending	0.4	15.494	OK
X-X, +1.20D+0.50Lr+0.50L+1.60W	0.3221	+Z	Bottom	0.26	Bending	0.4	15.494	OK
X-X, +1.20D+0.50Lr+0.50L+1.60W	0.3221	-Z	Bottom	0.26	Bending	0.4	15.494	OK
X-X, +1.20D+0.50L+0.50S+1.60W	0.3602	+Z	Bottom	0.26	Bending	0.4	15.494	OK
X-X, +1.20D+0.50L+0.50S+1.60W	0.3602	-Z	Bottom	0.26	Bending	0.4	15.494	OK
X-X, +1.20D+0.50L+0.20S+E	0.3111	+Z	Bottom	0.26	Bending	0.4	15.494	OK
X-X, +1.20D+0.50L+0.20S+E	0.3111	-Z	Bottom	0.26	Bending	0.4	15.494	OK
Z-Z, +1.40D	0.2292	-X	Bottom	0.26	Bending	0.4	15.494	OK
Z-Z, +1.40D	0.2292	+X	Bottom	0.26	Bending	0.4	15.494	OK
Z-Z, +1.20D+0.50Lr+1.60L+1.60H	0.5022	-X	Bottom	0.26	Bending	0.4	15.494	OK
Z-Z, +1.20D+0.50Lr+1.60L+1.60H	0.5022	+X	Bottom	0.26	Bending	0.4	15.494	OK
Z-Z, +1.20D+1.60L+0.50S+1.60H	0.5403	-X	Bottom	0.26	Bending	0.4	15.494	OK
Z-Z, +1.20D+1.60L+0.50S+1.60H	0.5403	+X	Bottom	0.26	Bending	0.4	15.494	OK
Z-Z, +1.20D+1.60Lr+0.50L	0.4183	-X	Bottom	0.26	Bending	0.4	15.494	OK
Z-Z, +1.20D+1.60Lr+0.50L	0.4183	+X	Bottom	0.26	Bending	0.4	15.494	OK
Z-Z, +1.20D+1.60Lr+0.80W	0.3364	-X	Bottom	0.26	Bending	0.4	15.494	OK
Z-Z, +1.20D+1.60Lr+0.80W	0.3364	+X	Bottom	0.26	Bending	0.4	15.494	OK
Z-Z, +1.20D+0.50L+1.60S	0.5403	-X	Bottom	0.26	Bending	0.4	15.494	OK
Z-Z, +1.20D+0.50L+1.60S	0.5403	+X	Bottom	0.26	Bending	0.4	15.494	OK
Z-Z, +1.20D+1.60S+0.80W	0.4584	-X	Bottom	0.26	Bending	0.4	15.494	OK
Z-Z, +1.20D+1.60S+0.80W	0.4584	+X	Bottom	0.26	Bending	0.4	15.494	OK
Z-Z, +1.20D+0.50Lr+0.50L+1.60W	0.3221	-X	Bottom	0.26	Bending	0.4	15.494	OK
Z-Z, +1.20D+0.50Lr+0.50L+1.60W	0.3221	+X	Bottom	0.26	Bending	0.4	15.494	OK
Z-Z, +1.20D+0.50L+0.50S+1.60W	0.3602	-X	Bottom	0.26	Bending	0.4	15.494	OK
Z-Z, +1.20D+0.50L+0.50S+1.60W	0.3602	+X	Bottom	0.26	Bending	0.4	15.494	OK
Z-Z, +1.20D+0.50L+0.20S+E	0.3111	-X	Bottom	0.26	Bending	0.4	15.494	OK
Z-Z, +1.20D+0.50L+0.20S+E	0.3111	+X	Bottom	0.26	Bending	0.4	15.494	OK

One Way Shear

Load Combination...	Vu @ -X	Vu @ +X	Vu @ -Z	Vu @ +Z	Vu:Max	Phi Vn	Vu / Phi*Vn	Status
+1.40D	1.019 psi	1.019 psi	1.019 psi	1.019 psi	1.019 psi	82.158 psi	0.0124	OK
+1.20D+0.50Lr+1.60L+1.60H	2.232 psi	2.232 psi	2.232 psi	2.232 psi	2.232 psi	82.158 psi	0.02717	OK
+1.20D+1.60L+0.50S+1.60H	2.402 psi	2.402 psi	2.402 psi	2.402 psi	2.402 psi	82.158 psi	0.02923	OK
+1.20D+1.60Lr+0.50L	1.859 psi	1.859 psi	1.859 psi	1.859 psi	1.859 psi	82.158 psi	0.02263	OK
+1.20D+1.60Lr+0.80W	1.496 psi	1.496 psi	1.496 psi	1.496 psi	1.496 psi	82.158 psi	0.0182	OK
+1.20D+0.50L+1.60S	2.402 psi	2.402 psi	2.402 psi	2.402 psi	2.402 psi	82.158 psi	0.02923	OK
+1.20D+1.60S+0.80W	2.038 psi	2.038 psi	2.038 psi	2.038 psi	2.038 psi	82.158 psi	0.0248	OK
+1.20D+0.50Lr+0.50L+1.60W	1.432 psi	1.432 psi	1.432 psi	1.432 psi	1.432 psi	82.158 psi	0.01743	OK
+1.20D+0.50L+0.50S+1.60W	1.601 psi	1.601 psi	1.601 psi	1.601 psi	1.601 psi	82.158 psi	0.01949	OK
+1.20D+0.50L+0.20S+E	1.383 psi	1.383 psi	1.383 psi	1.383 psi	1.383 psi	82.158 psi	0.01683	OK

All units k

Punching Shear

Load Combination...	Vu	Phi*Vn	Vu / Phi*Vn	Status
+1.40D	4.814 psi	164.317 psi	0.0293	OK
+1.20D+0.50Lr+1.60L+1.60H	10.547 psi	164.317 psi	0.06419	OK
+1.20D+1.60L+0.50S+1.60H	11.348 psi	164.317 psi	0.06906	OK
+1.20D+1.60Lr+0.50L	8.786 psi	164.317 psi	0.05347	OK
+1.20D+1.60Lr+0.80W	7.066 psi	164.317 psi	0.04301	OK
+1.20D+0.50L+1.60S	11.348 psi	164.317 psi	0.06906	OK
+1.20D+1.60S+0.80W	9.628 psi	164.317 psi	0.0586	OK
+1.20D+0.50Lr+0.50L+1.60W	6.765 psi	164.317 psi	0.04117	OK
+1.20D+0.50L+0.50S+1.60W	7.565 psi	164.317 psi	0.04604	OK
+1.20D+0.50L+0.20S+E	6.534 psi	164.317 psi	0.03976	OK

City of Portland
REVIEWED FOR CODE COMPLIANCE
MAR 20 2012
Permit Number

Zarosinski Engineering and Design
1400 NW 155th Circle
Vancouver, WA 98685
360-513-2746
Email: dzaro@zaroeng.com
By Dean P. Zarosinski PE

Title :
Engineer: Dean P. Zarosinski
Project Desc.:

Job # J0222-1 Timurland Co

General Footing

File: c:\AA WORK\2012 PROJECTS\J0221-2 Timurland Const\Calculations\j0222-1 calcs.ec6
ENERCALC, INC. 1983-2011, Build:6.12.3.14, Ver:6.12.3.14

Lic. # : KW-06009383 **Licensee : Zarosinski Engineering and Design, Inc.**

Description : Concrete footing handling two spans of roof. Add footing to take floor load

X-X, +1.20D+1.60L+0.50S+1.60H	0.5403	-Z	Bottom	0.26	Bending	0.4	15.494	OK
X-X, +1.20D+1.60Lr+0.50L	0.4183	+Z	Bottom	0.26	Bending	0.4	15.494	OK
X-X, +1.20D+1.60Lr+0.50L	0.4183	-Z	Bottom	0.26	Bending	0.4	15.494	OK

City of Portland
REVIEWED FOR CODE COMPLIANCE
MAR 20 2012
Permit Number

Zarosinski Engineering and Design
1400 NW 155th Circle
Vancouver, WA 98685
360-513-2746
Email: dzaro@zaroeng.com
By Dean P. Zarosinski PE

Title :
Engineer: Dean P. Zarosinski
Project Desc.:

Job # J0222-1 Timurland Co

General Footing

File: c:\AA WORK\2012 PROJECTS\J0221-2 Timurland Const\Calculations\j0222-1 calcs.ec6
ENERCALC, INC. 1983-2011, Build:6.12.3.14, Ver:6.12.3.14

Lic. # : KW-06009383 **Licensee : Zarosinski Engineering and Design, Inc.**

Description : Concrete footing handling two spans of roof. Add footing to take floor load

General Information

Calculations per, ASCE 7-05

Material Properties

f'c : Concrete 28 day strength	=	3.0	ksi
fy : Rebar Yield	=	60.0	ksi
Ec : Concrete Elastic Modulus	=	3,122.0	ksi
Concrete Density	=	145.0	pcf
φ Values Flexure	=	0.90	
Shear	=	0.750	

Analysis Settings

Min Steel % Bending Reinf.	=	0.00140
Min Allow % Temp Reinf.	=	0.00180
Min. Overturning Safety Factor	=	1.0 : 1
Min. Sliding Safety Factor	=	1.0 : 1
Add Ftg Wt for Soil Pressure	:	Yes
Use ftg wt for stability, moments & shears	:	Yes
Include Pedestal Weight as DL	:	No

Soil Design Values

Allowable Soil Bearing	=	1.50	ksf
Increase Bearing By Footing Weight	=	No	
Soil Passive Resistance (for Sliding)	=	250.0	pcf
Soil/Concrete Friction Coeff.	=	0.30	

Increases based on footing Depth
Footing base depth below soil surface = ft
Allowable pressure increase per foot of deptl = ksf
when footing base is below = ft

Increases based on footing plan dimension
Allowable pressure increase per foot of dept = ksf
when maximum length or width is greater = ft

Dimensions

Width parallel to X-X Axis	=	2.0	ft
Length parallel to Z-Z Axis	=	2.0	ft
Footing Thicknes	=	12.0	in

Pedestal dimensions...
px : parallel to X-X Axis = in
pz : parallel to Z-Z Axis = in
Height = in
Rebar Centerline to Edge of Concrete..
at Bottom of footing = 3.0 in

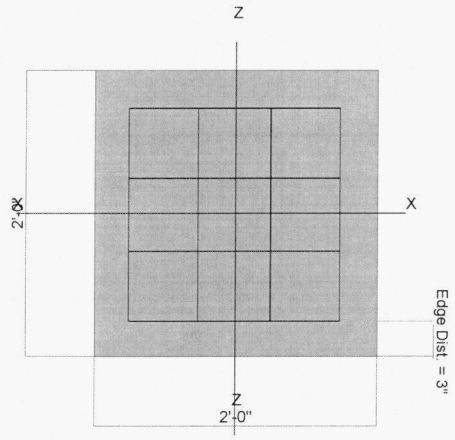

Reinforcing

Bars parallel to X-X Axis
Number of Bars = 4.0
Reinforcing Bar Size = # 4

Bars parallel to Z-Z Axis
Number of Bars = 4.0
Reinforcing Bar Size = # 4

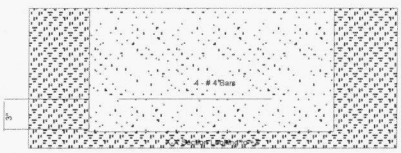

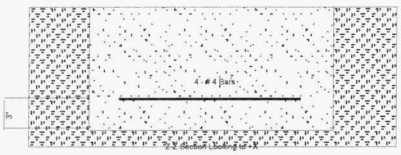

Bandwidth Distribution Check (ACI 15.4.4.2)

Direction Requiring Closer Separation	n/a
# Bars required within zone	n/a
# Bars required on each side of zone	n/a

Applied Loads

		D	Lr	L	S	W	E	H	
P : Column Load	=	1.310	0.70	1.310	1.310	.			k
OB : Overburden	=								ksf
M-xx	=								k-ft
M-zz	=								k-ft
V-x	=								k
V-z	=								k

City of Portland
REVIEWED FOR CODE COMPLIANCE
MAR 20 2012
Permit Number

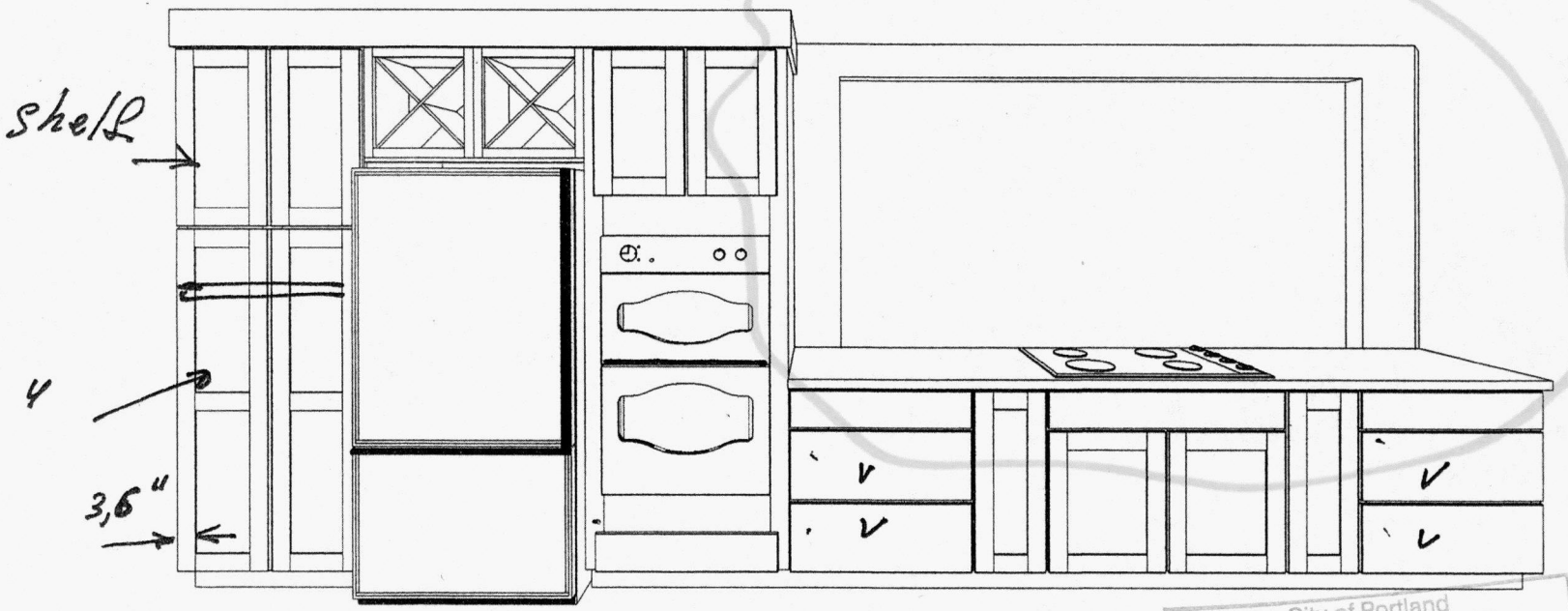

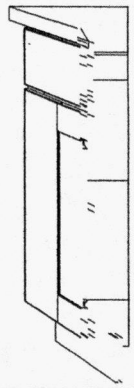

City of Portland
REVIEWED FOR CODE COMPLIANCE
MAR 20 2012
Permit Number

Note: This drawing is an artistic interpretation of the general appearance of the design. It is not meant to be an exact rendition.

THE HOME DEPOT

Designed: 3/10/2012
Printed: 3/11/2012

3100D555.KIT	All	Drawing #: 1

12-121112-RS

Building Permit Application
City of Portland, Oregon - Bureau of Development Services

1900 SW 4th Avenue, Portland, Oregon 97201 • 503-823-7310 • TTY 503-823-6868 • www.portlandoregon.gov/bds

This permit application expires if a permit is not obtained within 180 days after it has been accepted as complete.

Type of work

- ❑ New construction
- ❑ Addition/alteration/replacement
- ❑ Demolition
- ❑ Other:

Category of construction

- ❑ 1 & 2 family dwelling
- ❑ Commercial/industrial
- ❑ Accessory building
- ❑ Multifamily
- ❑ Master builder
- ❑ Other:

Job site information and location

Job no.:	Job address: 5515 SW Windsor
City/State/ZIP:	Portland OR 97221
Suite/bldg./apt. no.:	Project name:
Cross street/directions to job site:	Shattack.
Subdivision:	Lot no. / Tax map/parcel no.

Description of work

Open wall beetwin kitchen and living room. Instal a beem.

❑ Reference RS / Combination — Permit no.

☐ Property owner ☐ Tenant

Name:	Kate and Tom Nichols.
Address:	5515 SW windsor
City/State/ZIP:	Portland OR.
Phone:	650464-1566 — FAX:

Owner installation: This installation is being made on property that I own, which is not intended for sale, lease, rent, or exchange.

Owner signature: Kate has permition. Date:

☐ Contractor

Business name:	Timurland construction LLC
Address:	5152 SW 49 dr Portland OR
City/State/ZIP:	97221
Phone:	971-404-7296 — FAX: 503-777-15-04.
CCB lic. no.	178997

Authorized signature: 03-16-12

Print name: Date:

☐ Applicant ☐ Contact Person

Business name:	Timurland construction
Contact name:	Timur Tursunbaev
Address:	5152 SW 49 dr
City/State/ZIP:	Portland OR 97221
Phone:	Same — FAX: Same
E-mail:	

Authorized signature: 03-16-12

Print name: Date:

Office Use Only

Permit no:	
Date received:	
By:	

Required Data: One and Two Family Dwelling

Permit fees* are based on the value of the work performed. Indicate the value (rounded to the nearest dollar) of all equipment, materials, labor, overhead, and the profit for the work indicated on this application.

Valuation:	2550
Number of bedrooms:	
Number of bathrooms:	
Total number of floors:	
New dwelling area:	square feet
Garage/carport area:	square feet
Covered porch area:	square feet
Deck area:	square feet
Other structure area:	square feet

Required Data: Commercial Use

Permit fees* are based on the value of the work performed. Indicate the value (rounded to the nearest dollar) of all equipment, materials, labor, overhead, and the profit for the work indicated on this application.

Valuation:	
Existing building area:	square feet
New building area:	square feet
Number of stories:	
Type of construction:	
Occupancy groups	
Existing:	
New:	

Notice

All contractors and subcontractors are required to be licensed with the Oregon Construction Contractors Board under ORS 701 and may be required to be licensed in the jurisdiction in which work is being performed. If the applicant is exempt from licensing, the following reasons apply.

Statement of Fact: I certify that the facts and information set forth in this application are true and complete to the best of my knowledge. I understand that any falsification, misrepresentation or omission of fact (whether intentional or not) in this application or any other required document, as well as any misleading statement or omission, may be cause for revocation of permit and/or certificate of occupancy, regardless of how or when discovered.

Building Permit Fees*

Please refer to fee schedule

Fees due upon application	
Amount received	
Date received	

Sub-contractor information can be faxed to 503-823-7693.

IMPERVIOUS AREA

DRIVEWAY _____

PATIO _____

WALK _____

ROOF AREA
(INCL. OVERHANG) _____

TOTAL _____

BUILDING COVERAGE

BUILDING FOOTPRINT _____

LOT AREA

_____

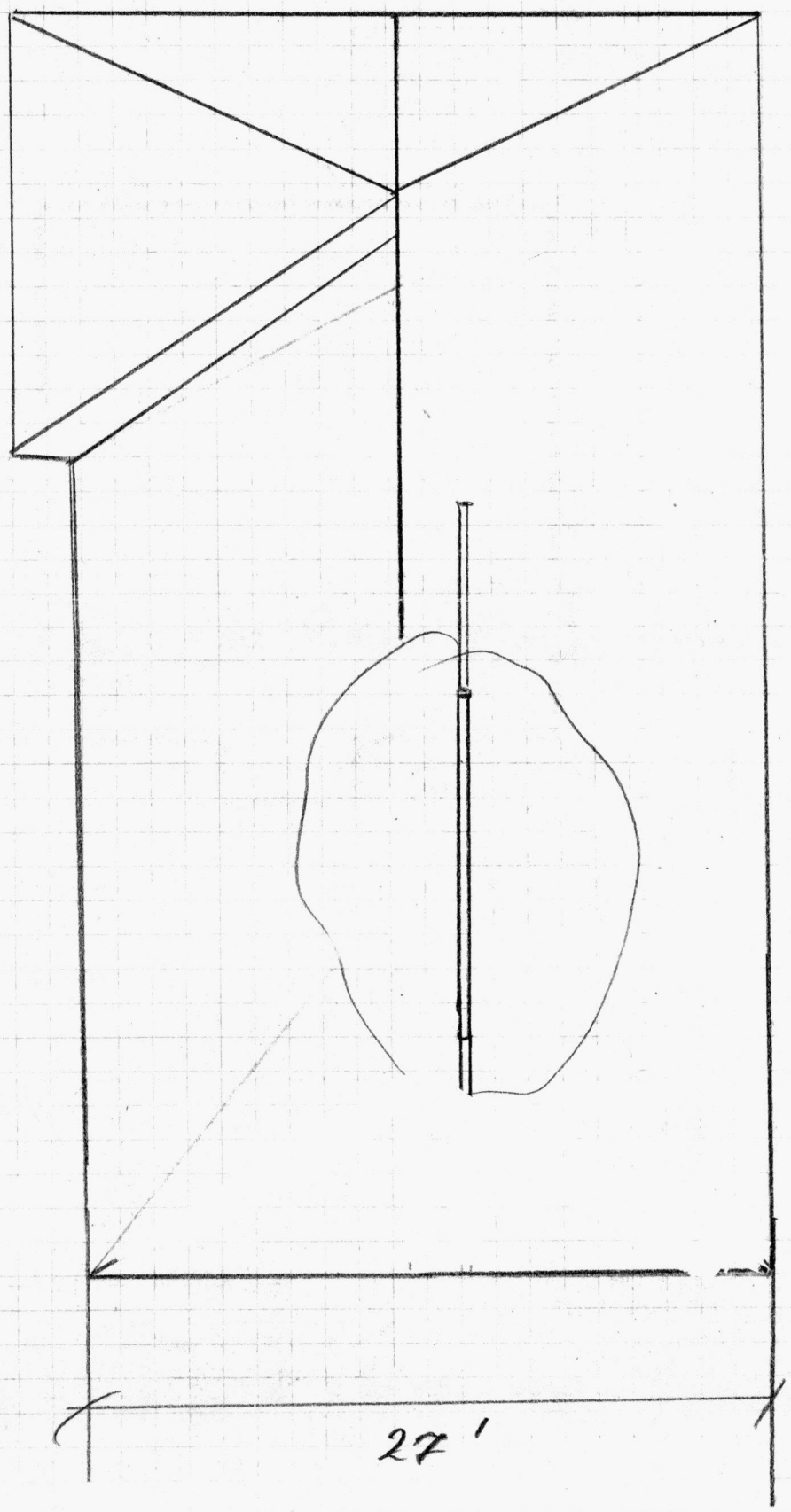

City of Portland
REVIEWED FOR CODE COMPLIANCE
MAR 20 2012
Permit Number

PROJECT LEGAL

12-123112PS

PROJECT ADDRESS

5515 SW Windsor
Portland OR 97221

SITE PLAN

SCALE 1" = 10'

2' 10'

NORTH ARROW

IMPERVIOUS AREA	BUILDING COVERAGE	LOT AREA
DRIVEWAY _____	BUILDING FOOTPRINT _____	_____
PATIO _____		
WALK _____		
ROOF AREA (INCL. OVERHANG) _____		
TOTAL _____		

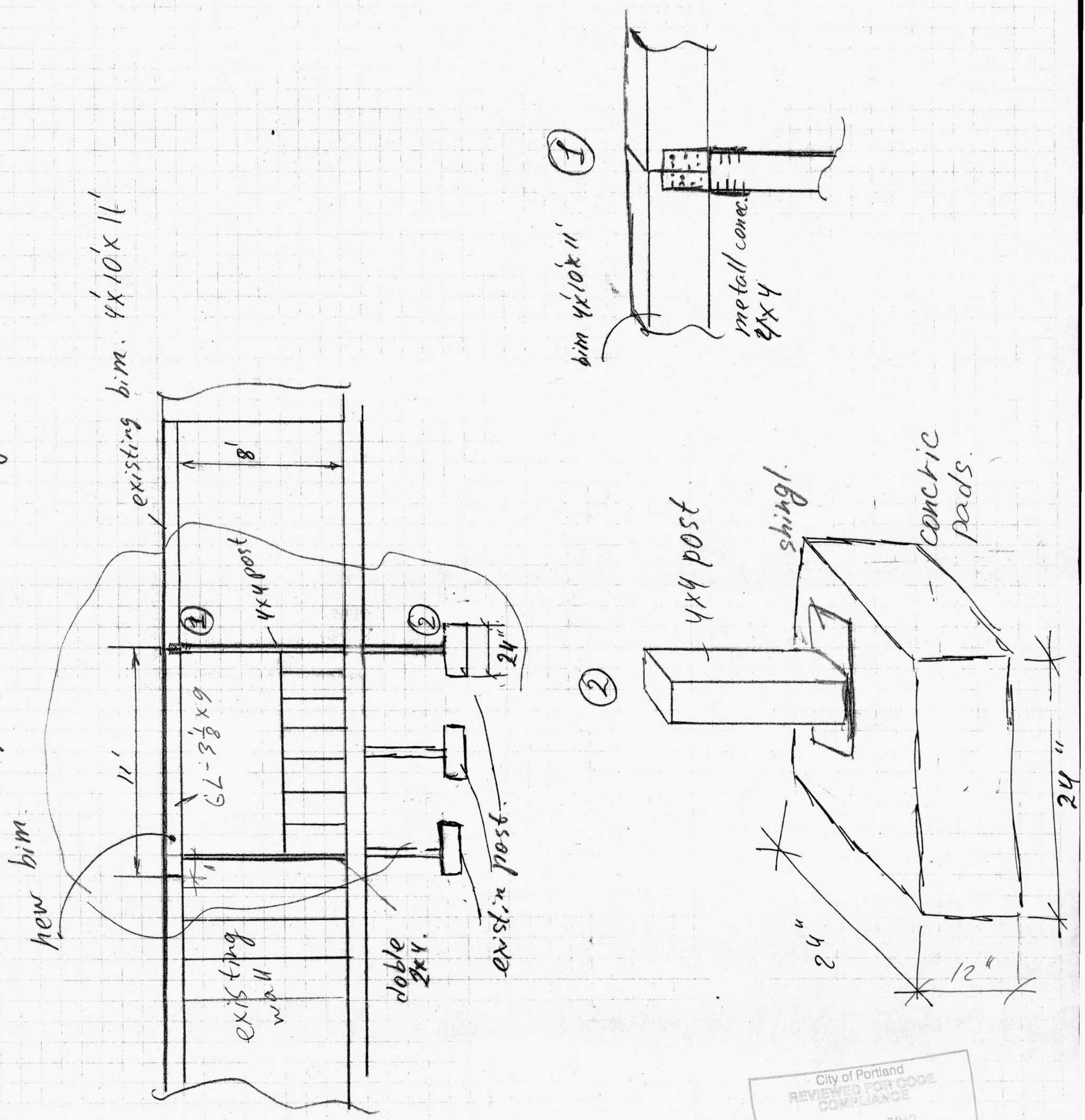

City of Portland
REVIEWED FOR CODE COMPLIANCE
MAR 20 2012
Permit Number

PROJECT LEGAL	PROJECT ADDRESS
_____	5515 SW Windsor Ct.
_____	Portland OR. 97221
_____	_____

SITE PLAN

SCALE 1" = 10'

2' 10'

NORTH ARROW