7 6/9/11 FA 11-133552 Dave R- Gary B. Lee H.

CITY OF PORTLAND
FACILITIES PERMIT PLAN INTAKE

APPLICANT INFORMATION

Applicant: COMMERCIAL REFRIGERATION
Address: 5920 NE GLISAN
Phone: 503.234-6445

Plans & Permits will be available for pick up on the 5th floor at 1900 SW 4th. Please indicate who should be contacted:

Name: JENNY McCORMICK
Phone # 503 / 234 6445

Contractor Information:

NAME:	CCB #:
Building:	
Plumbing:	
Electrical :	
Mechanical : COMMERCIAL REFRIGERATION	65271

Project Description:

Facility:
Installation Address: 805 SW Broadway
Project Name: Ring side
Job Description:

Bldg Valuation: _____ Project Ref. # _____

Building Permit #: FA11-133552

Occupancy Group:		Const. Type:	
No. Of Stories		Flood Plain	
Erosion Control		Alarms Reqd	
Sprinklers		Smoke Det	

Special Inspection:

Bin # _____
Building Registration Permit # _____
Scan _____

PLAN INTAKE:
Date: _____ Initials: _____

PERMIT INFORMATION:

Mechanical Permit #: _____
A: Valuation: 2900 **Job Description:** INSTALL REFRIGERATION EQUIPMENT FOR WINE COOLER + SUSHI CASE

Plumbing Permit #: _____
Number of Fixtures: _____
Back Flow Devices: _____
Water Service (# of Feet): _____
Other: _____

Electrical Permit #: _____
A: Feeders:
200 amps or less _____ 201 to 400 amps _____
401 to 600 amps _____ 601 to 1,000 amps _____
Over 1,000 amps or volts _____
B: Branch Circuits:
New, Alteration or Extension per Panel
Each branch circuit purchased
With a feeder : _____
First branch circuit without
Purchase of a feeder: _____
Each additional branch circuit _____
C: Miscellaneous:
Each pump or irrigation circle _____
Each sign or outline lighting _____
Limited energy panel alteration _____
Or extension; or signal circuits.
D: Plan Review:
____ Feeders 400 amps or more
____ System over 600 volts
____ Occupant Load over 99 Persons
____ Building over 3 stories
____ Health Care Facility
____ Building over 10,000 sq. ft.

City of Portland
JUN 14 2011
11-147022-FA
Permit Number

11-147022-FA MICRO MICRO

B1

COMMERCIAL REFRIGERATION INC.
5920 NE GLISAN • PORTLAND, OREGON 97213 • (503) 234-6445 • FAX (503) 234-0668

Bargreen Ellingson Inc
3232 NW Industrial Street
Portland, Oregon 97210
Attention: Don Veatch
Fax: 503.345.0738

May 3, 2011

Job: Ringside
838 SW Park
Portland, OR 97205

We will furnish and install refrigeration for the new custom Wine cabinet as follows:

Wine Room	11′6″ x 5′6″ x 8′0″ 38°F	
Model # M4WH-0050-CAV	Copeland condensing unit	208/230/1Ø
Model # BTOK18AG	Larkin Evaporator	115 volt
Model # BTOK18AG	Larkin Evaporator	115 volt

The water cooled condensing unit to set in a mechanical room below. Includes labor to install the refrigeration, valves, up to 70′ tubing run, R-404A, one year parts and labor warranty, and five year part warranty on the initial motor compressor.

Electrical connections by others.

CCB# 065271

COMMERCIAL REFRIGERATION INC.
5920 NE GLISAN • PORTLAND, OREGON 97213 • (503) 234-6445 • FAX (503) 234-0668

Bargreen Ellingson Inc
3232 NW Industrial Street
Portland, Oregon 97210
Attn: Don Veatch
Fax: 503-345-0738

April 12, 2011
Job: Ringside
Fox Tower
Portland, OR

We will furnish and install refrigeration for the new Sushi cabinet as follows:

Sushi Display Case	Turbo Air TSSC-6	35°F
	6′ case, stainless construction	
	Evaporator coil comes with cabinet	
M4WH-C025-IAA	Copeland condensing unit	115v

The water cooled condensing unit to set in a mechanical room below. Includes labor to install the refrigeration, valves, up to 70′ tubing run, R-404A, one year parts and labor warranty, and five year part warranty on the initial motor compressor.

Electrical connections by others.

CCB# 065271

SystemPro™ Water-Cooled Condensing Units

Capacity Data

HIGH/MED TEMP Model				Capacity (BTU/Hr) at 75° Inlet Water - Evaporator Temp (0°F)							
	BOM	Refrig.	H. P.	0	+10	+15	+20	+25	+30	+40	+45
MCWH-C027-IAA	**020**	22	1/4		1980	2260	2570	2910	3300	4200	4730
M2WH-C026-IAA	020	134a	1/4		1360	1620	1890	2160	2450	3100	4860
M4WH-C025-IAA	020	404A	1/4		2030	260	2520	2790	3090	3790	4190
MCWH-C036-IAA	020	22	1/3		2280	2600	2950	3330	3750	4700	5230
M2WH-C033-IAA, IAV	020	134a	1/3		1790	2190	2590	3000	35420	4350	4860
M2WH-C040-IAA, IAV	020	134a	1/3		2130	2530	2950	3390	3870	4920	5520
M4WH-C036-IAA, IAV	020	404A	1/3		2460	2780	3130	3520	3960	5000	5630
MCWH-C049-CAA, CAV	**020**	22	1/2		3220	3660	4130	4640	5200	6400	7060
MCWH-C056-IAA, IAV	020	22	1/2		3730	4230	4780	5390	6090	7770	8790
M2WH-C049-IAA, IAV	020	134a	1/2		2590	3050	3540	4050	4610	5860	6560
M2WH-C050-IAA, IAV	020	134a	1/2		2970	3520	4110	4720	5390	6860	7680
M2WH-C056-IAA, IAV	**020**	134a	1/2		3220	3830	4470	5140	5860	7460	8350
M4WH-C050-CAA, CAV	020	404A	1/2		3570	4020	4530	5130	5830	7590	8680
FJWM-C056-IAA, IAV	020	404A	1/2	3160	4180	4750	5350	6000			
F3WH-C078-IAA, IAV	**020**	22	3/4		4550	5310	6110	6980	7910	10020	11200
FTWH-C074-IAA, IAV	**020**	134a	3/4		4260	4940	5690	6530	7490	9820	11200
FTWM-C075-IAA, IAV	**020**	134a	3/4		4650	5580	6650	7850			
FJWM-C078-CAA, CAV	020	404A	3/4	4100	5460	6220	7040	7930			
F3WH-C100-CAV	020	22	1		5950	6800	7730	8750	9850	12300	13700
F3WM-C105-CFV, TFC	020	22	1		6550	7720	8970	10300			
FPWN-C150-CFV, TFC, TFD	020	134a	1		5150	6260	7570	8900	10500	14000	16200
FJWM-C106-CAV	020	404A	1	5030	6490	7300	8170	9100			
FPWN-C225-CFV, TFC, TFD	**020**	134a	1 1/4		7630	9050	10700	12500	14400	18700	21000
FJWM-C125-CFV, TFC	020	404A	1 1/4	5400	7070	8030	9100	10300			
FJWM-C126-CAV, TFC	020	404A	1 1/4	6380	8240	9290	10400	11600			
F3WD-C151-CFV, TFC, TFD	**020**	22	1 1/2		8120	9760	11600	13500	15700	20400	23000
FPWN-C300-CFV, TFC,TFD	020	134a	1 1/2		9720	11500	13600	15900	18400	23800	26800
FPWN-C150-CFV, TFC, TFD	**020**	404A	1 1/2	7350	10300	11900	13700	15500			
F3WD-C201-CFV, TFC, TFD	020	22	2		10400	12400	14600	16900	19400	25100	28300
FPWN-C325-CFV, TFC, TFD	**020**	134a	2		10300	12600	15000	17800	20900	28200	32400
FJWM-C200-CFV, TFC	020	404A	2	8720	12000	13900	15800	17900			
F3WD-C225-CFV, TFC, TFD	020	22	2 1/4		12000	14200	16600	19300	22100	28600	32100
FPWN-C225-CFV, TFC, TFD	020	404A	2 1/4	10800	14500	16500	18600	20900			
F3WD-C301-CFV, TFC, TFD	**020**	22	3		17900	20800	24000	27400	31100	39000	43300
FPWN-C300-CFV, TFC, TFD	020	404A	3	13400	18600	21400	24300	27200			
F3WD-C325-CFV, TFC, TFD	020	22	3 1/4		20200	23300	26600	30200	34200	43400	48800
FPWN-C325-CFV, TFC, TFD	020	404A	3 1/4	15100	20400	23600	27200	31400			
F3WD-C401-CFV, TFC, TFD	020	22	4		26300	30400	34700	39400	44600	56600	63700
FJWM-C400-CFV, TFC, TFD	020	404A	4	20100	27500	31700	36400	41400			
F3WD-C501-CFV, TFC, TFD	020	22	5		30100	34700	39700	45100	52900	63900	71200
FJWM-C500-CFV, TFC	020	404A	5	23900	32000	36500	41300	46300			

Bolded - Stock Item

Capacity at 60 Hertz with 5° subcooling
HT models are rated at 65°F return gas temperature
MT models are rated at 40°F return gas temperature

SystemPro™ Water-Cooled Condensing Units

Physical Data

HIGH/MED TEMP Model	Comp Model	Overall Dimensions (In)			Connecting Lines		Minimum Circuit Ampacity - Max Fuse Size				Pump Down Capacity (lbs)	Ship Wt. (lbs)
		L	W	H	Suction	Liquid	115-1-60	230-1-60	230-3-60	460-3-60		
MCWH-C027	ARE36C3	17.9	13.0	8.7	3/8 S	1/4 S	18.4 - 15				1.9	49
M2WH-C026	ARE27C3E	17.9	13.0	8.7	3/8 S	1/4 S	6.3 - 15				1.9	44
M4WH-C025	ASE19C3E	17.9	12.8	9.0	3/8 S	1/4 S	10.0 - 15				1.7	44
MCWH-C036	ARE43C3	17.9	12.8	8.8	3/8 S	1/4 S	8.9 - 15				2.6	50
M2WH-C033	ARE37C3E	17.9	13.0	8.7	3/8 S	1/4 S	9.0 - 15	4.3 - 15			1.9	50
M2WH-C040	ARE41C3E	17.9	13.0	8.7	3/8 S	1/4 S	9.3 - 15	4.9 - 15			1.9	50
M4WH-C036	ASE24C3E	17.9	12.8	9.0	3/8 S	1/4 S	9.8 - 15	5.2 - 15			2.5	51
MCWH-C049	ARE59C3	17.9	12.8	9.3	3/8 S	1/4 S	10.0 - 15	5.0 - 15			2.6	54
MCWH-C056	ART69C1	17.9	13.3	9.8	3/8 S	1/4 S	14.3 - 25	7.6 - 15			2.6	54
M2WH-C049	ART51C1E	17.9	12.8	9.0	3/8 S	1/4 S	11.6 - 20	6.0 - 15			2.7	60
M2WH-C050	ART62C1E	17.9	12.8	9.8	3/8 S	1/4 S	13.8 - 20	6.7 - 15			2.7	60
M2WH-C056	ART64C1E	17.9	12.8	9.8	3/8 S	1/4 S	13.8 - 20	7.8 - 15			2.7	60
M4WH-C050	ASE32C3E	17.9	12.8	9.3	3/8 S	1/4 S	11.5 - 20	6.1 - 15			2.5	51
FJWM-C056	RS43C2E	17.9	13.2	11.2	5/8 S	1/4 S	12.6 - 20	7.1 - 15			3.0	76
F3WH-C078	RS47C2	24.0	17.1	12.1	5/8 S	3/8 S	17.9 - 30	8.9 - 15			4.2	90
FTWH-C074	RR81C2E	18.0	12.7	11.6	5/8 S	1/4 S	19.0 - 30	11.3 - 20			3.5	93
FTWM-C075	RS54C2E	24.0	16.1	11.8	5/8 S	3/8 S	14.8 - 25	8.5 - 15			6.4	106
FJWM-C078	RS55C2E	24.0	17.1	12.1	5/8 S	3/8 S	16.5 - 25	7.6 - 15			5.5	80
F3WH-C100	RS64C2	24.0	16.1	11.8	5/8 S	3/8 S		9.6 - 15			4.2	96
F3WM-C105	RS70C1	24.0	17.3	12.8	7/8 S	3/8 S		8.8 - 15	5.9 - 15	3.3 - 15	13.6	99
FPWN-C150	CS10K6E	24.0	16.2	17.0	7/8 S	3/8 S		13.6 - 20	9.4 - 15	4.5 - 15	12.8	132
FJWM-C106	RS64C2E	24.0	16.1	11.8	7/8 S	3/8 S		9.6 - 15			5.5	90
FPWN-C225	CS14K6E	24.0	16.8	15.0	7/8 S	3/8 S		15.5 - 25	11.4 - 20	5.9 - 15	11.0	133
FJWM-C125	RS70C1E	24.0	18.5	12.8	7/8 S	3/8 S		8.8 - 15	5.9 - 15		10.4	99
FJWM-C126	RS80C2E	24.0	17.3	12.8	7/8 S	3/8 S		12.0 - 20	8.0 - 15		10.6	119
F3WD-C151	CR18KQ	24.0	16.1	15.0	7/8 S	3/8 S		15.0 - 20	7.5 - 15	3.8 - 15	14.0	131
FPWN-C300	CS18K6E	24.0	16.9	15.0	1-1/8 S	3/8 S		20.0 - 35	13.0 - 20	5.9 - 15	12.8	133
FPWN-C150	CS10K6E	24.0	16.2	17.0	7/8 S	3/8 S		13.6 - 20	9.4 - 15	4.5 - 15	11.0	132
F3WD-C201	CR24KQ	24.0	16.1	15.0	7/8 S	3/8 S		16.9 - 30	9.4 - 15	4.6 - 15	14.0	135
FPWN-C325	CS20K6E	26.2	21.0	15.5	1-1/8 S	3/8 S		23.3 - 40	14.3 - 25	6.4 - 15	13.5	164
FJWM-C200	CS12K6E	24.0	16.8	15.0	7/8 S	3/8 S		13.6 - 20	9.4 - 15		11.0	133
F3WD-C225	CR28KQ	24.0	16.1	15.0	7/8 S	3/8 S		18.8 - 30	11.0 - 15	5.5 - 15	14.0	150
FPWN-C225	CS14K6E	24.0	16.8	15.0	7/8 S	3/8 S		15.5 - 25	11.4 - 20	5.9 - 15	11.0	133
F3WD-C301	CR37KQ	26.2	21.0	15.4	1-1/8 S	3/8 S		23.1 - 40	13.9 - 20	7.0 - 15	14.7	164
FPWN-C300	CS18K6E	24.0	16.9	15.0	1-1/8 S	3/8 S		20.0 - 35	13.0 - 20	5.9 - 15	11.0	133
F3WD-C325	CR41KQ	26.2	21.0	15.4	1-1/8 S	3/8 S		24.3 - 40	16.4 - 25	7.4 - 15	14.7	185
FPWN-C325	CS20K6E	26.2	21.0	15.5	1-1/8 S	3/8 S		23.3 - 40	14.3 - 25	6.4 - 15	11.6	164
F3WD-C401	CR53KQ	26.8	21.0	21.1	1-1/8 S	1/2 S		41.9 - 60	25.9 - 40	10.8 - 15	21.1	197
FJWM-C400	CS27K6E	26.2	21.0	21.0	1-1/8 S	1/2 S		29.9 - 50	19.5 - 35	9.6 - 15	18.2	188
F3WD-C501	CRN5-0500	25.8	21.8	21.1	1-1/8 S	1/2 S		46.4 - 70	30.3 - 45		21.1	197
FJWM-C500	CS33K6E	25.0	21.1	21.3	1-1/8 S	1/2 S		38.4 - 60	25.9 - 45		18.2	188

S-Sweat

Note: Water Connections (Inlet/Outlet) 1/2 in.

SystemPro™ Water-Cooled Condensing Units

Capacity Data

HIGH/MED TEMP Model				Capacity (BTU/Hr) at 75° Inlet Water - Evaporator Temp (0°F)							
	BOM	Refrig.	H. P.	0	+10	+15	+20	+25	+30	+40	+45
MCWH-C027-IAA	**020**	22	1/4		1980	2260	2570	2910	3300	4200	4730
M2WH-C026-IAA	020	134a	1/4		1360	1620	1890	2160	2450	3100	4860
M4WH-C025-IAA	020	404A	1/4		2030	260	2520	2790	3090	3790	4190
MCWH-C036-IAA	020	22	1/3		2280	2600	2950	3330	3750	4700	5230
M2WH-C033-IAA, IAV	020	134a	1/3		1790	2190	2590	3000	35420	4350	4860
M2WH-C040-IAA, IAV	020	134a	1/3		2130	2530	2950	3390	3870	4920	5520
M4WH-C036-IAA, IAV	020	404A	1/3		2460	2780	3130	3520	3960	5000	5630
MCWH-C049-CAA, CAV	**020**	22	1/2		3220	3660	4130	4640	5200	6400	7060
MCWH-C056-IAA, IAV	020	22	1/2		3730	4230	4780	5390	6090	7770	8790
M2WH-C049-IAA, IAV	020	134a	1/2		2590	3050	3540	4050	4610	5860	6560
M2WH-C050-IAA, IAV	020	134a	1/2		2970	3520	4110	4720	5390	6860	7680
M2WH-C056-IAA, IAV	**020**	134a	1/2		3220	3830	4470	5140	5860	7460	8350
M4WH-C050-CAA, CAV	020	404A	1/2		3570	4020	4530	5130	5830	7590	8680
FJWM-C056-IAA, IAV	020	404A	1/2	3160	4180	4750	5350	6000			
F3WH-C078-IAA, IAV	**020**	22	3/4		4550	5310	6110	6980	7910	10020	11200
FTWH-C074-IAA, IAV	**020**	134a	3/4		4260	4940	5690	6530	7490	9820	11200
FTWM-C075-IAA, IAV	**020**	134a	3/4		4650	5580	6650	7850			
FJWM-C078-CAA, CAV	020	404A	3/4	4100	5460	6220	7040	7930			
F3WH-C100-CAV	020	22	1		5950	6800	7730	8750	9850	12300	13700
F3WM-C105-CFV, TFC	020	22	1		6550	7720	8970	10300			
FPWN-C150-CFV, TFC, TFD	020	134a	1		5150	6260	7570	8900	10500	14000	16200
FJWM-C106-CAV	020	404A	1	5030	6490	7300	8170	9100			
FPWN-C225-CFV, TFC, TFD	**020**	134a	1 1/4		7630	9050	10700	12500	14400	18700	21000
FJWM-C125-CFV, TFC	020	404A	1 1/4	5400	7070	8030	9100	10300			
FJWM-C126-CAV, TFC	020	404A	1 1/4	6380	8240	9290	10400	11600			
F3WD-C151-CFV, TFC, TFD	**020**	22	1 1/2		8120	9760	11600	13500	15700	20400	23000
FPWN-C300-CFV, TFC,TFD	020	134a	1 1/2		9720	11500	13600	15900	18400	23800	26800
FPWN-C150-CFV, TFC, TFD	**020**	404A	1 1/2	7350	10300	11900	13700	15500			
F3WD-C201-CFV, TFC, TFD	020	22	2		10400	12400	14600	16900	19400	25100	28300
FPWN-C325-CFV, TFC, TFD	**020**	134a	2		10300	12600	15000	17800	20900	28200	32400
FJWM-C200-CFV, TFC	020	404A	2	8720	12000	13900	15800	17900			
F3WD-C225-CFV, TFC, TFD	020	22	2 1/4		12000	14200	16600	19300	22100	28600	32100
FPWN-C225-CFV, TFC, TFD	020	404A	2 1/4	10800	14500	16500	18600	20900			
F3WD-C301-CFV, TFC, TFD	**020**	22	3		17900	20800	24000	27400	31100	39000	43300
FPWN-C300-CFV, TFC, TFD	020	404A	3	13400	18600	21400	24300	27200			
F3WD-C325-CFV, TFC, TFD	020	22	3 1/4		20200	23300	26600	30200	34200	43400	48800
FPWN-C325-CFV, TFC, TFD	020	404A	3 1/4	15100	20400	23600	27200	31400			
F3WD-C401-CFV, TFC, TFD	020	22	4		26300	30400	34700	39400	44600	56600	63700
FJWM-C400-CFV, TFC, TFD	020	404A	4	20100	27500	31700	36400	41400			
F3WD-C501-CFV, TFC, TFD	020	22	5		30100	34700	39700	45100	52900	63900	71200
FJWM-C500-CFV, TFC	020	404A	5	23900	32000	36500	41300	46300			

Bolded - Stock Item

Capacity at 60 Hertz with 5° subcooling
HT models are rated at 65°F return gas temperature
MT models are rated at 40°F return gas temperature

SystemPro™ Water-Cooled Condensing Units

Physical Data

HIGH/MED TEMP Model	Comp Model	Overall Dimensions (In)			Connecting Lines		Minimum Circuit Ampacity - Max Fuse Size				Pump Down Capacity (lbs)	Ship Wt. (lbs)
		L	W	H	Suction	Liquid	115-1-60	230-1-60	230-3-60	460-3-60		
MCWH-C027	ARE36C3	17.9	13.0	8.7	3/8 S	1/4 S	18.4 - 15				1.9	49
M2WH-C026	ARE27C3E	17.9	13.0	8.7	3/8 S	1/4 S	6.3 - 15				1.9	44
M4WH-C025	ASE19C3E	17.9	12.8	9.0	3/8 S	1/4 S	10.0 - 15				1.7	44
MCWH-C036	ARE43C3	17.9	12.8	8.8	3/8 S	1/4 S	8.9 - 15				2.6	50
M2WH-C033	ARE37C3E	17.9	13.0	8.7	3/8 S	1/4 S	9.0 - 15	4.3 - 15			1.9	50
M2WH-C040	ARE41C3E	17.9	13.0	8.7	3/8 S	1/4 S	9.3 - 15	4.9 - 15			1.9	50
M4WH-C036	ASE24C3E	17.9	12.8	9.0	3/8 S	1/4 S	9.8 - 15	5.2 - 15			2.5	51
MCWH-C049	ARE59C3	17.9	12.8	9.3	3/8 S	1/4 S	10.0 - 15	5.0 - 15			2.6	54
MCWH-C056	ART69C1	17.9	13.3	9.8	3/8 S	1/4 S	14.3 - 25	7.6 - 15			2.6	54
M2WH-C049	ART51C1E	17.9	12.8	9.0	3/8 S	1/4 S	11.6 - 20	6.0 - 15			2.7	60
M2WH-C050	ART62C1E	17.9	12.8	9.8	3/8 S	1/4 S	13.8 - 20	6.7 - 15			2.7	60
M2WH-C056	ART64C1E	17.9	12.8	9.8	3/8 S	1/4 S	13.8 - 20	7.8 - 15			2.7	60
M4WH-C050	ASE32C3E	17.9	12.8	9.3	3/8 S	1/4 S	11.5 - 20	6.1 - 15			2.5	51
FJWM-C056	RS43C2E	17.9	13.2	11.2	5/8 S	1/4 S	12.6 - 20	7.1 - 15			3.0	76
F3WH-C078	RS47C2	24.0	17.1	12.1	5/8 S	3/8 S	17.9 - 30	8.9 - 15			4.2	90
FTWH-C074	RR81C2E	18.0	12.7	11.6	5/8 S	1/4 S	19.0 - 30	11.3 - 20			3.5	93
FTWM-C075	RS54C2E	24.0	16.1	11.8	5/8 S	3/8 S	14.8 - 25	8.5 - 15			6.4	106
FJWM-C078	RS55C2E	24.0	17.1	12.1	5/8 S	3/8 S	16.5 - 25	7.6 - 15			5.5	80
F3WH-C100	RS64C2	24.0	16.1	11.8	5/8 S	3/8 S		9.6 - 15			4.2	96
F3WM-C105	RS70C1	24.0	17.3	12.8	7/8 S	3/8 S		8.8 - 15	5.9 - 15	3.3 - 15	13.6	99
FPWN-C150	CS10K6E	24.0	16.2	17.0	7/8 S	3/8 S		13.6 - 20	9.4 - 15	4.5 - 15	12.8	132
FJWM-C106	RS64C2E	24.0	16.1	11.8	7/8 S	3/8 S		9.6 - 15			5.5	90
FPWN-C225	CS14K6E	24.0	16.8	15.0	7/8 S	3/8 S		15.5 - 25	11.4 - 20	5.9 - 15	11.0	133
FJWM-C125	RS70C1E	24.0	18.5	12.8	7/8 S	3/8 S		8.8 - 15	5.9 - 15		10.4	99
FJWM-C126	RS80C2E	24.0	17.3	12.8	7/8 S	3/8 S		12.0 - 20	8.0 - 15		10.6	119
F3WD-C151	CR18KQ	24.0	16.1	15.0	7/8 S	3/8 S		15.0 - 20	7.5 - 15	3.8 - 15	14.0	131
FPWN-C300	CS18K6E	24.0	16.9	15.0	1-1/8 S	3/8 S		20.0 - 35	13.0 - 20	5.9 - 15	12.8	133
FPWN-C150	CS10K6E	24.0	16.2	17.0	7/8 S	3/8 S		13.6 - 20	9.4 - 15	4.5 - 15	11.0	132
F3WD-C201	CR24KQ	24.0	16.1	15.0	7/8 S	3/8 S		16.9 - 30	9.4 - 15	4.6 - 15	14.0	135
FPWN-C325	CS20K6E	26.2	21.0	15.5	1-1/8 S	3/8 S		23.3 - 40	14.3 - 25	6.4 - 15	13.5	164
FJWM-C200	CS12K6E	24.0	16.8	15.0	7/8 S	3/8 S		13.6 - 20	9.4 - 15		11.0	133
F3WD-C225	CR28KQ	24.0	16.1	15.0	7/8 S	3/8 S		18.8 - 30	11.0 - 15	5.5 - 15	14.0	150
FPWN-C225	CS14K6E	24.0	16.8	15.0	7/8 S	3/8 S		15.5 - 25	11.4 - 20	5.9 - 15	11.0	133
F3WD-C301	CR37KQ	26.2	21.0	15.4	1-1/8 S	3/8 S		23.1 - 40	13.9 - 20	7.0 - 15	14.7	164
FPWN-C300	CS18K6E	24.0	16.9	15.0	1-1/8 S	3/8 S		20.0 - 35	13.0 - 20	5.9 - 15	11.0	133
F3WD-C325	CR41KQ	26.2	21.0	15.4	1-1/8 S	3/8 S		24.3 - 40	16.4 - 25	7.4 - 15	14.7	185
FPWN-C325	CS20K6E	26.2	21.0	15.5	1-1/8 S	3/8 S		23.3 - 40	14.3 - 25	6.4 - 15	11.6	164
F3WD-C401	CR53KQ	26.8	21.0	21.1	1-1/8 S	1/2 S		41.9 - 60	25.9 - 40	10.8 - 15	21.1	197
FJWM-C400	CS27K6E	26.2	21.0	21.0	1-1/8 S	1/2 S		29.9 - 50	19.5 - 35	9.6 - 15	18.2	188
F3WD-C501	CRN5-0500	25.8	21.8	21.1	1-1/8 S	1/2 S		46.4 - 70	30.3 - 45		21.1	197
FJWM-C500	CS33K6E	25.0	21.1	21.3	1-1/8 S	1/2 S		38.4 - 60	25.9 - 45		18.2	188

S-Sweat Note: Water Connections (Inlet/Outlet) 1/2 in.

MODEL BTO

Twin Flow Reach-In Unit Cooler

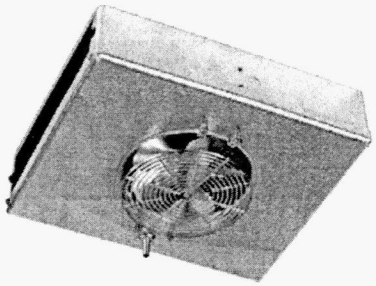

Features

- Compact two-way design with medium velocity air flow
- Mounts flush to the ceiling and draws air in through the fan and discharges out both sides
- Air pattern reduces air loss when doors are opened and the medium velocity reduces product drying
- Textured aluminum cabinet
- Stainless steel fasteners
- Molded Lexan® fan guards
- Drain pan and fan panel is easily removed for installation and servicing
- Optional coated coil available (Model BTOK) for enhanced protection in corrosive environments
- Coils are constructed of copper tubing with aluminum fins
- Expansion valve can be mounted inside the cabinet
- Internal junction box is provided for electrical connection
- Motors are thermally protected and permanently lubricated
- All models are UL listed for the US and Canada
- UL classified to NSF standards
- Sweat inlet connection to reduce leaks (flare connection available as a ship loose option)

Application

Model BTO is ideal for temperatures of 35°F and higher. Box temperatures are kept more constant throughout and fresh products last longer. Seven sizes are available with BTUH from 900 to 5,500 at 10° TD.

Larger BTO sizes are suitable for large reach-in and small step-in or walk-in coolers.

Nomenclature

BTO	K	09	A	G
Model	**Coil Option**	**Size**	**Electrical Code**	**Vintage**
Twin Flow Unit Cooler	Blank = Standard K = Coated	09-55	A = 115/1/60 B = 208-230/1/60	

Performance & Electrical Data

Model	BTUH 10°F TD	BTUH 15°F TD	Motor Data				Connections (in.)			Approx. Ship Wt. (lbs.)
			CFM	Qty.	115/1/60 Total FLA	208-230/1/60 Total FLA	Coil Inlet OD	Suction ID	Drain OD	
BTO(K)09	900	1,350	130	1	0.8	0.4	1/2	1/2	1/2	12
BTO(K)13	1,300	1,950	240	2	1.6	0.8	1/2	1/2	1/2	14
BTO(K)18^	1,800	2,700	255	1	1.0	0.5	1/2	1/2	1/2	15
BTO(K)25^*	2,500	3,750	460	2	2.0	1.0	1/2	1/2	1/2	23
BTO(K)35^*	3,500	5,250	425	2	2.0	1.0	1/2	1/2	1/2	24
BTO(K)45^*	4,500	6,750	550	2	2.0	1.0	1/2	1/2	5/8	34
BTO(K)55^*	5,500	8,250	730	1	2.1	1.1	1/2	1/2	5/8	34

^ Model available with EC motors
** Models 25, 35, 45 and 55 require an external equalized expansion valve*

Model	Dimensions (in.)														
	A	B	C	D	E	F	G	H	J	K	L	M	N	P	R
BTO(K)09	16-1/8	19-1/8	7-9/16	4	2-5/16	9-9/16	2-3/4	4-7/8	4-1/2	8-5/8	2-1/2	2-5/8	4-9/16	10	7/8
BTO(K)13	16-1/8	19-1/8	7-9/16	4	2-5/16	9-9/16	2-3/4	5-3/4	4-1/2	8-5/8	2-1/2	2-5/8	4-9/16	10	7/8
BTO(K)18	16-1/8	19-1/8	7-9/16	4	2-5/16	9-9/16	2-3/4	5-3/4	4-1/2	8-5/8	2-1/2	2-5/8	4-9/16	10	7/8
BTO(K)25	18-1/8	26-1/8	11-1/16	4	2-5/16	13-1/16	2-3/4	6-3/4	5-1/2	12-1/8	3-1/2	2-5/8	8-1/16	10	7/8
BTO(K)35	18-1/8	26-1/8	11-1/16	4	2-5/16	13-1/16	2-3/4	6-3/4	5-1/2	12-1/8	3-1/2	2-5/8	8-1/16	10	7/8
BTO(K)45	21-1/8	29-1/8	8-3/16	7-3/4	3-7/16	10-5/8	3-1/2	9-1/4	8	13-5/8	5-15/16	4-1/4	7-9/16	14	1-3/4
BTO(K)55	21-1/8	29-1/8	8-3/16	7-3/4	3-7/16	10-5/8	3-1/2	8-1/2	8	13-5/8	5-15/16	4-1/4	7-9/16	14	1-3/4

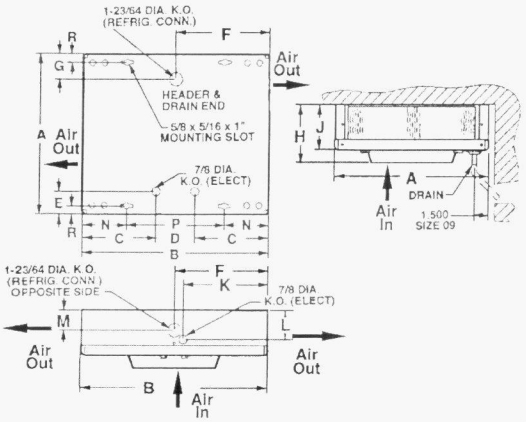

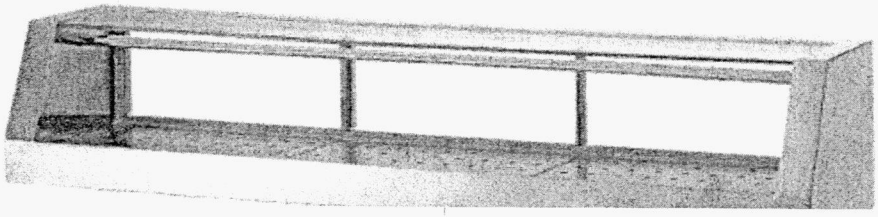

FEATURES / BENEFITS

- ALL MODELS SUPPLIED WITH REMOVABLE TEMPERED GLASS TOP, FRONT AND BACK-DOORS (ANSI STANDARD APPROVED)
- 304 STAINLESS STEEL FINISHED MIRROR
- NSF LISTED UNDER STANDARD NO. 7
- ALL UNITS PREPPED AND READY FOR REMOTE REFRIGERATION HOOK-UP

Indoor Installation

Sushi Case Model	No. of Sushi Case Linked	Recommanded HP	Overall Size (L*W*H)	Pipe Job	Amps
TSSC-4 (4 ft.)	ONE	1/4	19.4*13.0*9.0	High 1/4 : Low 3/8	6.6
	TWO	1/3	17.4*14.0*10.9	High 1/4 : Low 3/8	8.1
	THREE	1/2	20.6*13.9*13.2	High 1/4 : Low 1/2	10.2
TSSC-5 (5 ft.)	ONE	1/4	19.4*13.0*9.0	High 1/4 : Low 3/8	6.6
	TWO	1/2	20.6*13.9*13.2	High 1/4 : Low 1/2	10.2
	THREE	3/4	24.3*18.0*14.0	High 1/4 : Low 5/8	6.0
TSSC-6 (6 ft.)	ONE	1/4	19.4*13.0*9.0	High 1/4 : Low 3/8	6.6
	TWO	1/2	20.6*13.9*13.2	High 1/4 : Low 1/2	10.2
	THREE	3/4	24.5*28.3*17.9	High 3/8 : Low 1/2	15

Outdoor Installation

Sushi Case Model	No. Of Sushi Case Linked	Recommanded HP	Overall Size (L*W*H)	Pipe Job	Amps
TSSC-4 (4 ft.)	ONE	1/3	17.4*14.0*10.9	High 1/4 : Low 3/8	8.1
	TWO	1/2	20.6*13.9*13.2	High 1/4 : Low 1/2	10.2
	THREE	1/2	24.3*18.0*14.0	High 1/4 : Low 1/2	6.0
TSSC-5 (5 ft.)	ONE	1/3	17.4*14.0*10.9	High 1/4 : Low 3/8	8.1
	TWO	1/2	24.3*18.0*14.0	High 1/4 : Low 1/2	6.0
	THREE	3/4	24.3*18.0*14.0	High 1/4 : Low 5/8	8.0
TSSC-6 (6 ft.)	ONE	1/3	17.4*14.0*10.9	High 1/4 : Low 3/8	8.1
	TWO	1/2	24.3*18.0*14.0	High 1/4 : Low 1/2	6.0
	THREE	3/4	24.5*28.3*17.9	High 3/8 : Low 1/2	15

* Please confirm at the time of the purchase.

* TSSC-C4(220V) * TSSC-C1,2,3(115V)